# EXHIBIT G

# BRIDGE RECORD

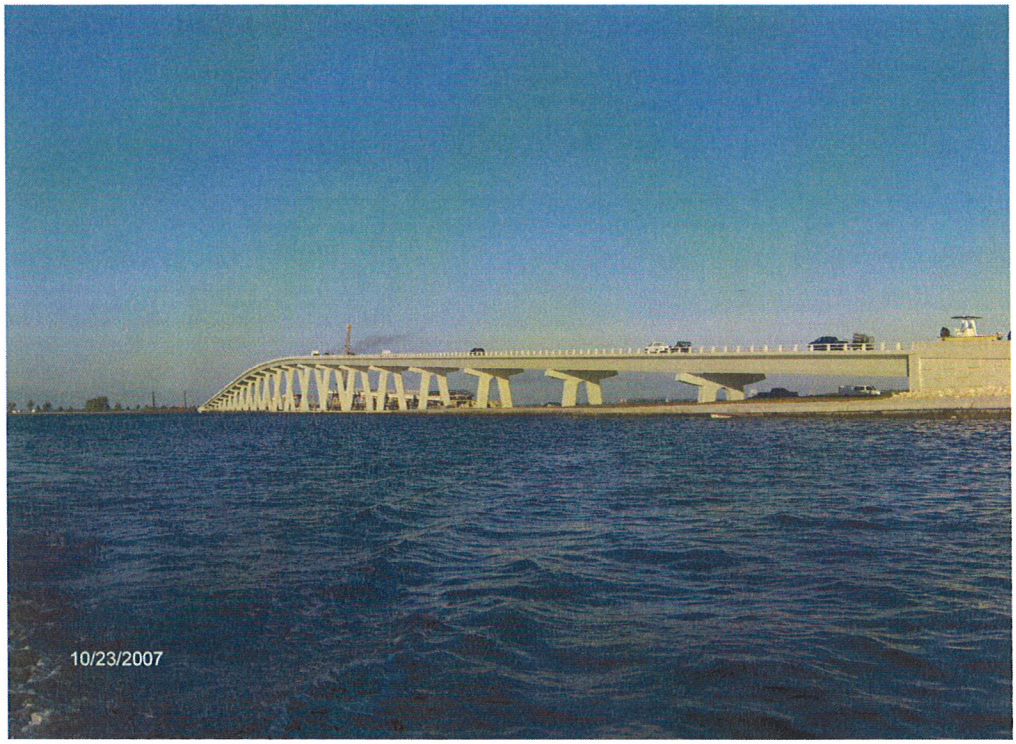


BRIDGE NUMBER: 124116
BRIDGE NAME: STRUCTURE A SANIBEL CAUSEWAY

BRIDGE RECORD CONTENTS

I. Inspection Reports - This section contains periodic bridge inspection reports, bridge repair work orders, and accident reports.

II. Inventory - contained in this section is the following bridge information: photographs, location map, detailed data, history, load carrying capacity, inspection preparation, and drawings.

III. Communications - Correspondence such as letters, memorandums, and notices directly related to this bridge are contained in this section.

# SECTION I

# BRIDGE INSPECTION REPORTS

## I. INSPECTION REPORTS

BRIDGE NUMBER: 124116
BRIDGE NAME: STRUCTURE A SANIBEL CAUSEWAY

| DOCUMENT LOG | |
|---|---|
| Type of Inspection Report or Document | Date Inspected |
| Initial Inspection Report | 11/15/07 |
| | |
| | |
| | |
| | |
| | |
| | |
| | |
| | |
| | |
| | |
| | |
| | |
| | |
| | |
| | |
| | |
| | |
| | |
| | |
| | |
| | |
| | |

# BRIDGE INSPECTION REPORT

## PREPARED FOR:
## FLORIDA DEPT. OF TRANSPORTATION
## OWNER: LEE COUNTY

VOLKERT & ASSOCIATES, INC.

BRIDGE NO. 124116 INSPECTION DATE: 11/15/07

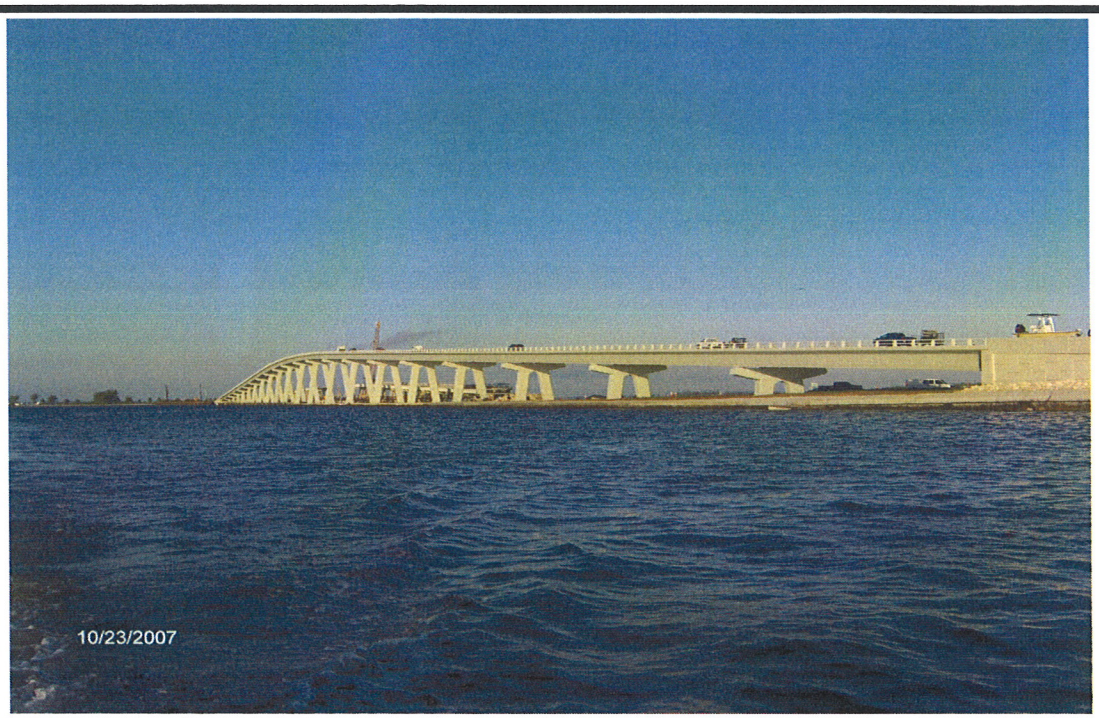


STRUCTURE A SANIBEL CAUSEWAY

# FLORIDA DEPARTMENT OF TRANSPORTATION
# BRIDGE MANAGEMENT SYSTEM

## Inspection Report
(INITIAL INSPECTION)



BY: Volkert & Associates
OWNER: 2 County Hwy Agency
MAINTAINED BY: 2 County Hwy Agency
STRUCTURE TYPE: 6 P/S Conc Continuous 02 Stringer/Girder
LOCATION: 1ST STRCT S/O TOLL PLAZA
SERVICE TYPE ON: 1 Highway
SERV TYPE UND: 5 Waterway

BRIDGE NAME: STRUCTURE A SANIBEL CAUSEW/
YEAR BUILT: 2007
SECTION NO.: 12 000 000
MP: 0
ROUTE: 00867
FACILITY CARRIED: CR 867
FEATURE INTERSECTED: SAN CARLOS BAY

- [ ] THIS BRIDGE CONTAINS FRACTURE CRITICAL COMPONENTS
- [ ] THIS BRIDGE IS SCOUR CRITICAL
- [ ] THIS REPORT IDENTIFIES DEFICIENCIES WHICH REQUIRE PROMPT CORRECTIVE ACTION

- [ ] FUNCTIONALLY OBSOLETE
- [ ] STRUCTURALLY DEFICIENT

TYPE OF INSPECTION: Regular NBI
DATE FIELD INSPECTION WAS COMPLETED: ABOVE WATER: 11/15/2007 UNDERWATER: 10/02/2007

SMART FLAGS:
None

OVERALL NBI RATINGS:
DECK: 8 Very Good
SUPERSTRUCTURE: 6 Satisfactory
SUBSTRUCTURE: 5 Fair
CHANNEL: 8 Protected
CULVERT: N N/A (NBI)

SUFFICIENCY RATING: 68.0
HEALTH INDEX: 99.82

| FIELD PERSONNEL / TITLE / NUMBER | INITIALS |
|---|---|
| Wolfe, Wade - Bridge Inspector (CBI #00382) (lead) | W |
| Morris, Stephen - Certified Bridge Inspector (CBI #00441) | |
| Brewer, James - Technician | |
| Hoogland, Keith - Bridge Inspection (CBI#00341) | |
| Schmidt, Kyle - Diver | |
| Brewer, James - Diver | |
| McCranie, Orion - Diver | |

REVIEWING BRIDGE INSPECTION SUPERVISOR:

Rucks, Edward - CBI (#00273) EK

CONFIRMING REGISTERED PROFESSIONAL ENGINEER:

Harrigan, Robert - Professional Engineer (PE #45236)
Volkert & Associates
3409 W. Lemon Street
CERTIFICATE OF AUTHORIZATION #4641
Tampa, FL 33609

SIGNATURE: Robert J. Harrigan, Jr.

DATE: DEC 20 2007

## All Elements

**UNIT: Structure Unit 1 DECKS**

**ELEMENT/ENV: 12/4 Bare Concrete Deck 129408 sf. ELEM CATEGORY:** Decks/Slabs

| CONDITION STATE (5) | DESCRIPTION | QUANTITY |
|---|---|---|
| 1 | The surface of the deck has no repaired areas, there are no spalls/delaminations in the deck surface or underside and the only cracking is superficial. | 129408 sf. |

**ELEMENT/ENV: 300/4 Strip Seal Exp Joint 345 lf. ELEM CATEGORY:** Joints

| CONDITION STATE (3) | DESCRIPTION | QUANTITY |
|---|---|---|
| 1 | The element shows minimal deterioration. There is no leakage at any point along the joint. Gland is secure and has no defects. Debris in joint is not causing any problems. The adjacent deck and/or header is sound. | 345 lf. |

ELEMENT INSPECTION NOTES:
NOTE: This element quantifies joints 1, 4, 7, 10, 13, 16, 19 and 22.

**ELEMENT/ENV: 334/4 Metal Rail Coated 6005 lf. ELEM CATEGORY:** Railing

| CONDITION STATE (5) | DESCRIPTION | QUANTITY |
|---|---|---|
| 1 | There is no evidence of active corrosion. Protective coating is sound and functioning as intended to protect the element. | 6005 lf. |

ELEMENT INSPECTION NOTES:
NOTE: Barriers meet NCHRP TL4 criteria and meet SIA Item 36 standards.

CS1: There are several tire marks on the barriers.

**ELEMENT/ENV: 109/4 P/S Conc Open Girder 12010 lf. ELEM CATEGORY:** Superstructure

| CONDITION STATE (4) | DESCRIPTION | QUANTITY |
|---|---|---|
| 1 | The element shows little or no deterioration. There may be discoloration, efflorescence, and/or superficial cracking but without effect on strength and/or serviceability. | 11998 lf. |

## All Elements

**UNIT: Structure Unit 1 SUPERSTRUCTURE**

**ELEMENT/ENV: 109/4 P/S Conc Open Girder 12010 lf. ELEM CATEGORY:** Superstructure

| CONDITION STATE (4) | DESCRIPTION | QUANTITY |
|---|---|---|
| **2** | Minor cracks and spalls may be present, and there may be exposed reinforcing with no evidence of corrosion. There is no exposure of the prestress system. | 12 lf. |

ELEMENT INSPECTION NOTES:

CS1: The beams have between 3 and 5 diagonal web cracks up to 4ft long x less than 1/64in wide, within 5ft of the bearings.

The east face of beam 14-4 has a 10in x 1/64in vertical bottom flange crack, 3in from the bearing.

The left top flange of beam 17-4 has wide spread longitudinal hairline cracking with efflorescence and some cracks up to 1/64in wide near pier 18.

CS2: There are beam end /closure pour delaminations and spalls at pier 11 as follows:
10/11-1, east and west faces, delamination, 10in x 5in;
10/11-2, west face, spall with no exposed steel, delamination, 24in x 4in x 2in;
10/11-3, west face, spall with no exposed steel, 10in x 10in x 1/2in;
10/11-4, west face, delamination, 6in x 5in;
10/11-4, east face, spall with exposed steel, 42in x 12in x 5in. Refer to Photo 1. REPAIR ALL

There are minor bottom flange spalls with no exposed steel as follows:
Beam 15-1, east face near pier 16, 6in x 2in x 1/2in;
Beam 15-3, east face at 7/8pt, 4in x 4in x 1in;
Beam 15-4, west face at 1/2pt, 16in x 4in x 1in.

**ELEMENT/ENV: 397/4 Drain. Syst Metal 20 ea. ELEM CATEGORY:** Superstructure

| CONDITION STATE (5) | DESCRIPTION | QUANTITY |
|---|---|---|
| **1** | There is no evidence of active corrosion and the paint system is sound and functioning as intended to protect the metal surface. Drainage system is functioning as intended. | 20 ea. |

ELEMENT INSPECTION NOTES:

CS1: Most scupper down spouts are not properly shimmed or anchored to the beams. Refer to Photo 2. REPAIR

**ELEMENT/ENV: 310/4 Elastomeric Bearing 168 ea. ELEM CATEGORY:** Bearings

| CONDITION STATE (3) | DESCRIPTION | QUANTITY |
|---|---|---|
| **1** | The element shows little or no deterioration. Shear deformations are correct for existing temperatures. | 168 ea. |

## All Elements

**UNIT: Structure Unit 1 SUPERSTRUCTURE**

**ELEMENT/ENV: 563/4 Acc Ladd & Plat 16 ea. ELEM CATEGORY:** Movable

| CONDITION STATE (5) | DESCRIPTION | QUANTITY |
|---|---|---|
| 1 | There is no evidence of active corrosion, and the paint system is sound and functioning as intended to protect the metal surface. | 16 ea. |

ELEMENT INSPECTION NOTES:
NOTE: Quantity includes eight ladders and eight platforms including two fender access walkways.

**ELEMENT/ENV: 580/4 Navigational Lights 1 ea. ELEM CATEGORY:** Movable

| CONDITION STATE (3) | DESCRIPTION | QUANTITY |
|---|---|---|
| 1 | Lights are operational, lenses are clean and not broken, there is no evidence of corrosion. | 1 ea. |

ELEMENT INSPECTION NOTES:
NOTE: Element includes six fender lights, two clearance gauge lights and two swing lights. Only temporary lighting was in place at time of inspection.

**ELEMENT/ENV: 205/4 R/Conc Column 40 ea. ELEM CATEGORY:** Substructure

| CONDITION STATE (4) | DESCRIPTION | QUANTITY |
|---|---|---|
| 1 | The element shows little or no deterioration. There may be discoloration, efflorescence, and/or superficial cracking but without effect on strength and/or serviceability. | 40 ea. |

**ELEMENT/ENV: 207/4 P/S Conc Holl Pile 224 ea. ELEM CATEGORY:** Substructure

| CONDITION STATE (4) | DESCRIPTION | QUANTITY |
|---|---|---|
| 1 | The element shows little or no deterioration. There may be discoloration, efflorescence, and/or superficial cracking but without affect on strength and/or serviceability. | 220 ea. |
| 2 | Minor cracks, spalls and scaling may be present and there may be exposed reinforcing with no evidence of corrosion. There is no exposure of the prestress system. | 2 ea. |

## All Elements

**UNIT: Structure Unit 1 SUBSTRUCTURE**

**ELEMENT/ENV: 207/4 P/S Conc Holl Pile 224 ea. ELEM CATEGORY:** Substructure

| CONDITION STATE (4) | DESCRIPTION | QUANTITY |
|---|---|---|
| **4** | Severe cracks, spalls, scaling, delaminations, and corrosion of non-prestressed reinforcement are prevalent. There may also be exposure and deterioration of the prestress system (manifested by loss of bond, broken strands or wire, failed anchorages, etc) | 2 ea. |

ELEMENT INSPECTION NOTES:

CS2: Pile 11-1 has two spalls with no exposed steel up to 6in x 6in x 1-1/2in.

Pile 17-10 has an intermittent 13ft x 12in x 3in spall with no exposed steel on the NE corner beginning 2ft below the footer.

CS4: The upper 7ft of piles 11-8 and 11-15 are fractured and all prestress strands are exposed. Refer to Sketch 1. REPAIR

**ELEMENT/ENV: 215/4 R/Conc Abutment 70 lf. ELEM CATEGORY:** Substructure

| CONDITION STATE (4) | DESCRIPTION | QUANTITY |
|---|---|---|
| **1** | The element shows little or no deterioration. There may be discoloration, efflorescence, and/or superficial cracking but without effect on strength and/or serviceability. | 70 lf. |

**ELEMENT/ENV: 220/4 R/C Sub Pile Cap/Ftg 20 ea. ELEM CATEGORY:** Substructure

| CONDITION STATE (4) | DESCRIPTION | QUANTITY |
|---|---|---|
| **1** | The element shows little or no deterioration. There may be discoloration, efflorescence, and/or superficial cracking but without effect on strength and/or serviceability. | 19 ea. |
| **2** | Minor cracks and spalls may be present, but there is no exposed reinforcing or surface evidence of rebar corrosion. | 1 ea. |

ELEMENT INSPECTION NOTES:

CS2: Footer 17 has two spalls with no exposed steel up to 12in x 12in x 2in on the northeast and southeast corners.

## All Elements

**UNIT: Structure Unit 1 SUBSTRUCTURE**

**ELEMENT/ENV: 234/4 R/Conc Cap 862 lf. ELEM CATEGORY:** Substructure

| CONDITION STATE (4) | DESCRIPTION | QUANTITY |
|---|---|---|
| 1 | The element shows little or no deterioration. There may be discoloration, efflorescence, and/or superficial cracking but without effect on strength and/or serviceability. | 862 lf. |

ELEMENT INSPECTION NOTES:
CS1: Both shear blocks in span 10 at pier 10 and the right block in span 11 at pier 12 are fractured. Refer to Photo 3. REPAIR

**ELEMENT/ENV: 387/4 P/S Fender/Dolphin 588 lf. ELEM CATEGORY:** Substructure

| CONDITION STATE (4) | DESCRIPTION | QUANTITY |
|---|---|---|
| 1 | The element shows little or no deterioration. There may be discoloration, efflorescence, and/or superficial cracking but without affect on strength and/or serviceability. | 588 lf. |

ELEMENT INSPECTION NOTES:
NOTE: Quantity includes dolphins. Fenders and dolphins incomplete at time of inspection.

**ELEMENT/ENV: 396/4 Other Abut Slope Pro 2500 sf. ELEM CATEGORY:** Substructure

| CONDITION STATE (4) | DESCRIPTION | QUANTITY |
|---|---|---|
| 1 | There is little or no deterioration. Surface defects only are in evidence. Random open joints may exist. | 2500 sf. |

ELEMENT INSPECTION NOTES:
NOTE: Element includes rock rubble rip rap and articulating concrete block mats. Under construction at time of inspection.

**ELEMENT/ENV: 321/4 R/Conc Approach Slab 2 ea. ELEM CATEGORY:** Other Elements

| CONDITION STATE (4) | DESCRIPTION | QUANTITY |
|---|---|---|
| 1 | The slab has not settled and shows no sign of deterioration other than superficial surface cracks. | 2 ea. |

## All Elements

**UNIT: Structure Unit 1 MISCELLANEOUS**

**ELEMENT/ENV: 478/4 MSE Walls** **120 lf.** **ELEM CATEGORY:** Other Elements

| CONDITION STATE (4) | DESCRIPTION | QUANTITY |
|---|---|---|
| **1** | There is little or no deterioration. Surface defects only are in evidence. | 120 lf. |

ELEMENT INSPECTION NOTES:
NOTE: Quantity refers to 30LF at each corner.

**ELEMENT/ENV: 290/4 Channel** **1 ea.** **ELEM CATEGORY:** Channel

| CONDITION STATE (4) | DESCRIPTION | QUANTITY |
|---|---|---|
| **1** | The channel is in good condition, channel banks are protected or well vegetated, river control devices and embankment protection are not required or are in good condition. | 1 ea. |

**Structure Notes**

OWNER: LEE COUNTY

TRAFFIC RESTRICTION: Based on the load rating analysis dated 8/1/07, the structure does not require posting. The structure is not posted.

Structure inventoried from south to north on a west to east leg of a south to north roadway. Direction of stationing is used to describe deficiency locations. (Left is West).

This structure replaces a bascule bridge 124043. The nearest structures are also on the causeway and are numbered 124114 and 124115.

Lane shift required for underbridge inspection vehicle. Power boat with fathometer used for groundline measurements.

**INSPECTION NOTES: GPFO 11/15/2007**

Sufficiency Rating Calculation Accepted by KNVOLCW-P at 2007-12-13 11:47:06
Sufficiency Rating Calculation Accepted by KNVOLCW-P at 2007-12-04 11:53:05

LOAD CAPACITY EVALUATION:
The load rating dated 8/1/07 applies to the current condition of this bridge.

Construction of fenders, dolphins, slope protection and navigation lighting still in progress. Demolition of replaced structure ongoing. Left side groundline measurements not taken due to demolition.

Structure sustained damage due to demolition of replaced structure. Refer to Elements 109 P/S Conc Open Girder, 207 P/S Conc Holl Pile and 234 R/Conc Cap.

**PHOTO 1: 109/4 P/S CONC OPEN GIRDER**

Spall with exposed closure pour /diaphragm steel, beam 10/11-4 east face at pier 11.

REPAIR RECOMMENDATION:
Repair spalls and delaminations on all beams over pier 11. Suggest in depth inspection on blast damaged beams. 0.25CY 20MH

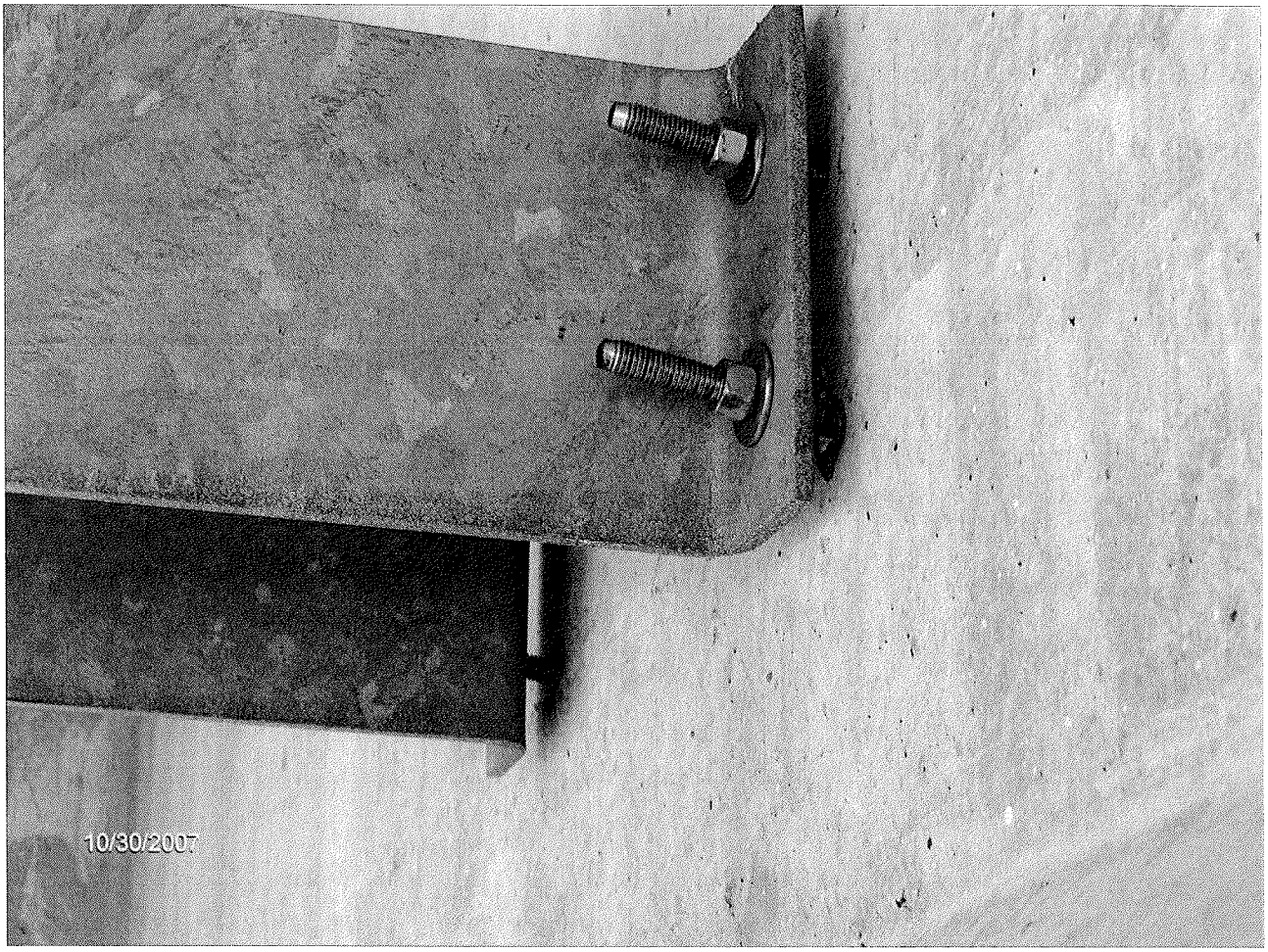


**PHOTO 2: 397/4 DRAIN SYST METAL**

Drain system down spout improperly anchored to beam, bay 4-1 near pier 4 - typical.

REPAIR RECOMMENDATION:
Properly shim and anchor all drain system downspouts. 100MH

**PHOTO 3: 234/4 R/CONC CAP**

Fractured left shear key span 10, pier 10 - typical.

REPAIR RECOMMENDATION:
Replace both shear keys span 1- pier 10 and right block span 11 at pier 12. Consider in depth inspection of areas possibly affected by blast. 100MH

**FLORIDA DEPARTMENT OF TRANSPORTATION**
BRIDGE MANAGEMENT SYSTEM
BRIDGE INSPECTION REPORT ADDENDUM

BRIDGE ID: 124116 PAGE: A1 OF A5
DISTRICT: 01 BARTOW INSPECTION DATE: 11/15/07

---

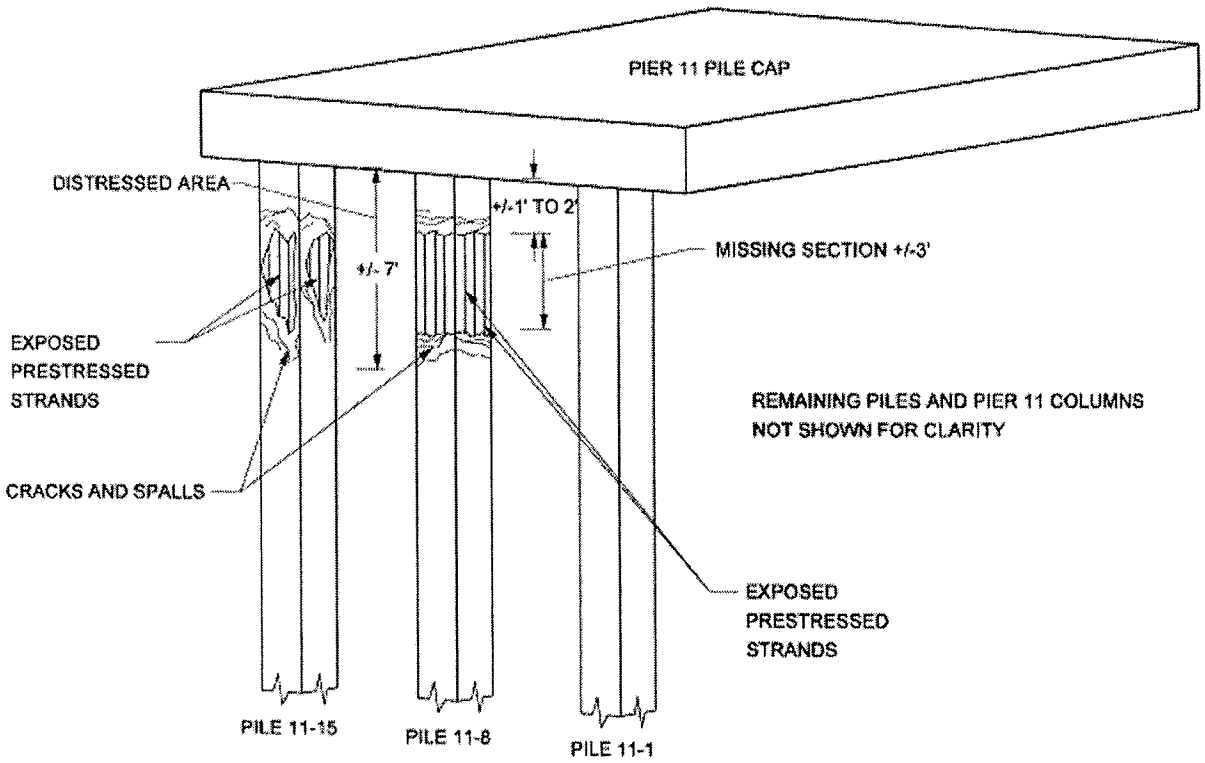


SKETCH 1: 207/4 P/S CONC HALL PILE

Fractured pile 11-8 with missing section and all prestressed strands exposed – typical.

WORK ORDER RECOMMENDATION:

Repair or replace pile 11-8 and 11-15. Consider performing in depth inspection of all substructure elements possibly affected by the demolition blast. 400MH

FLORIDA DEPARTMENT OF TRANSPORTATION BRIDGE MANAGEMENT SYSTEM
Bridge Profile Report

REPORT ID: INVT016
Structure #: 124116

DATE PRINTED: 12/13/2007



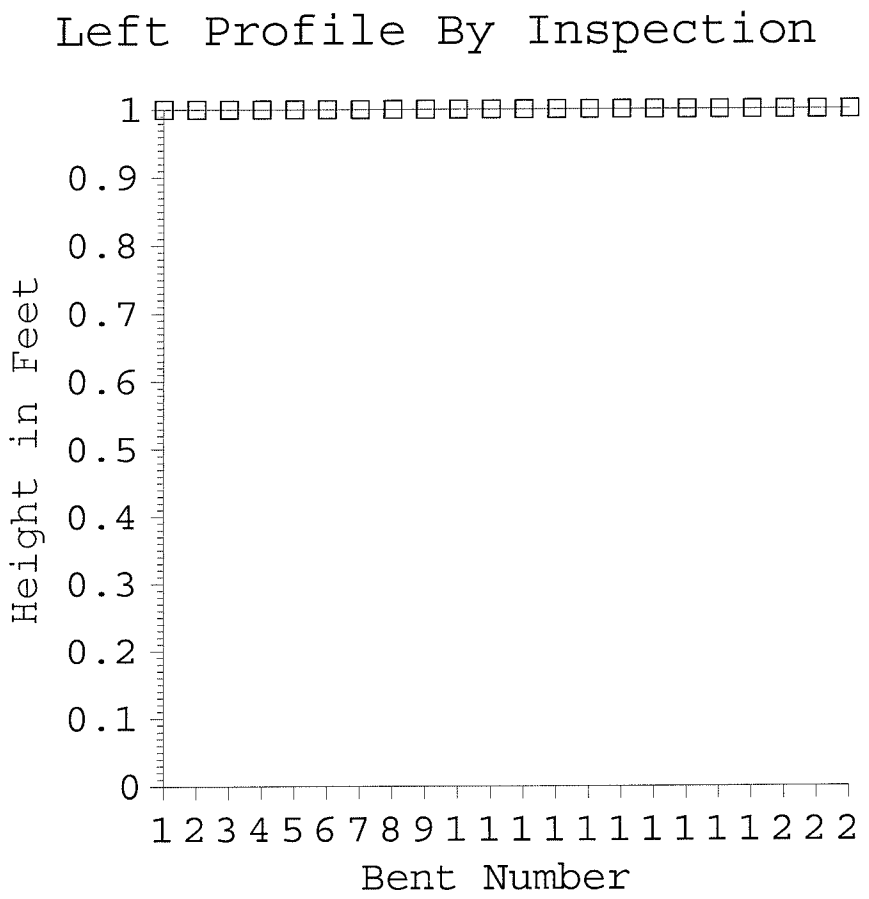


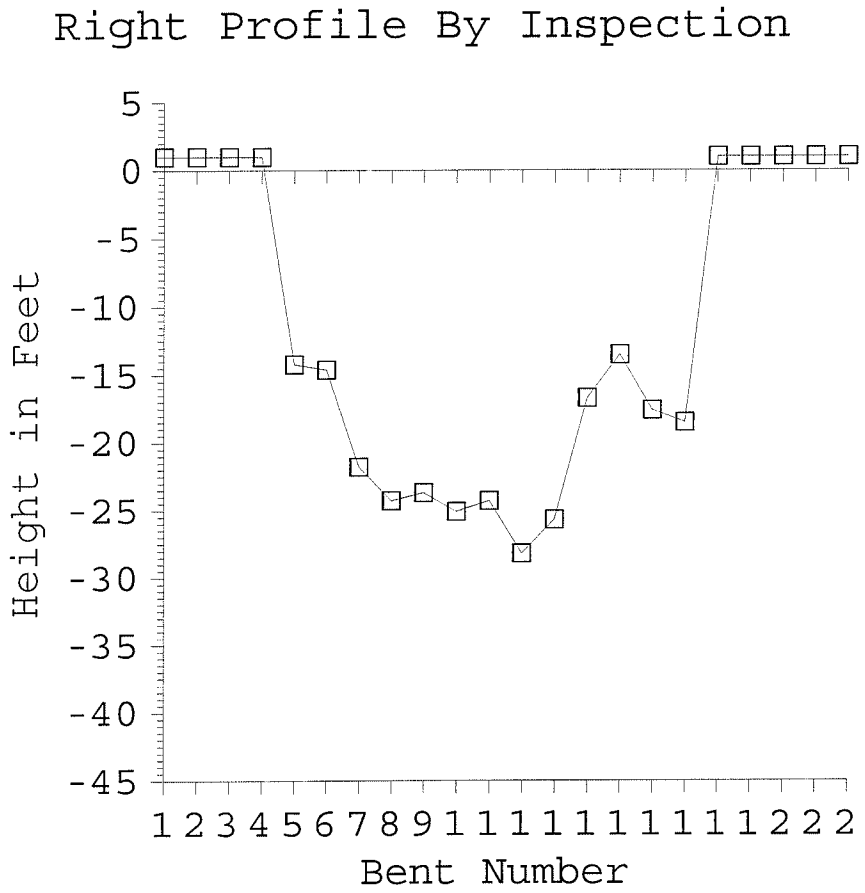

## Profile Data - Numerical Summary

**Inspection Date and Key:** 11/15/2007 GPFO

(All Heights Are In Feet)

| Bent # | Left Height | Right Height |
|---|---|---|
| 1 | -1 | -1 |
| 2 | -1 | -1 |
| 3 | -1 | -1 |
| 4 | -1 | -1 |
| 5 | -1 | 14.2 |
| 6 | -1 | 14.6 |
| 7 | -1 | 21.8 |
| 8 | -1 | 24.3 |
| 9 | -1 | 23.7 |
| 10 | -1 | 25.1 |
| 11 | -1 | 24.3 |
| 12 | -1 | 28.2 |
| 13 | -1 | 25.7 |
| 14 | -1 | 16.7 |
| 15 | -1 | 13.5 |
| 16 | -1 | 17.6 |
| 17 | -1 | 18.5 |
| 18 | -1 | -1 |
| 19 | -1 | -1 |
| 20 | -1 | -1 |
| 21 | -1 | -1 |
| 22 | -1 | -1 |

**Air Temp:**

**Profile Notes:**

Measurements referenced to top of pier 4 footer.
Waterline: 3.0ft

No left side measurements taken due to ongoing demolition.
Bents 1 - 4 and 18 - 22 are on dryland.

BOLT
UNDERWATER SERVICES
7946 62ND STREET NORTH
PINELLAS PARK, FL 33781

# Initial Underwater Bridge Inspection Report for Volkert & Associates, Inc.

Bridge ID: **124116** Underwater Date (93): 10/02/07
Location (9): First Structure from the east Toll Booth
Featured Intersected (6): Sanibel Causeway " Structure A"
Special Crew Hours: 28.0 Max. Depth: 28ft.
District: 01 South Lee County

FIELD PERSONNEL/TITLE/NUMBER

| | | |
|---|---|---|
| Hoogland, Keith S. – Diver / Inspector (CBI#00341) (lead) | DIVE | KSH |
| Schmidt, Kyle A. – Diver / Inspector | DIVE | |
| Brewer, James D. – Diver / Inspector | DIVE | |
| McCranie, Orion P. – Diver / Inspector | TEND/BOAT | |

**PILING/COLUMNS**
**ELEMENT: 207 HLW CORE** **224**: ea.
NCR: **7**

**Recommended Feasible Action:**
**Do Nothing**

Footer 17, Pile 10: NE corner 24in. below footer, intermittent SPL, no steel, 13ft. x 12in. x 3in. *New.*

NOTE: Piles 5-6, 5-7, 5-13, 5-14, 5-20, 5-21, 6-4, 6-5, 6-13, 6-14, 6-20, 6-21, 7-6, 7-7, 7-13, 7-20, 7-21, 8-1, 8-2, 8-3, 8-4, 8-5, 8-6, 8-7, 8-12, 8-13, 8-14, 8-19, 8-20, 8-21, 9-1, 9-2, 9-8, 9-9, 9-16 and all deficiencies were cleaned.

**SUBMERGED FOOTER**
**ELEMENT: 220 R/CONCRETE** **14**: ea.
NCR: **7**

**Recommended Feasible Action:**
**Do Nothing**

There are random minor spalls. *New.*
The footers have concrete formed sides that have vertical cracks with no CBO up to 1/16in. wide x full height. Several cracks have efflorescence. *New.*

NOTE: No cleaning was done due to forms still being in place.

**CHANNEL**
**ELEMENT: 290** **1**: ea.
NCR: **7**

**Recommended Feasible Action:**
**Do Nothing**

The seawalls were in a construction area and not inspected due to safety concerns.
There is scattered timber debris from the previous fender system along the new fender system.
On Bents 14 through 17, the groundline slopes upward going away from the piling up to 4ft. high on one or more sides.
Several piling had minimal marine growth on the bottom 4in. to 6in. *New.*

# BOLT UNDERWATER SERVICES, INC.

**Bridge ID: 124116**
**District: 01 South**

**Inspection Date: 10/02/07**

**FENDER SYSTEM**
**ELEMENT: 387 P/S CONCRETE** **256ft.**

**Recommended Feasible Action:**
**Do Nothing**

The fender system is not complete due to removal of old structure.

**INSPECTION NOTES: Boat & Motor**
**STRUCTURE NOTES: Divers inspected two hundred twenty-four 30in. piling in Bents 4 through 17.**

PHOTO LOG – None

# SECTION II

# INVENTORY

# II. INVENTORY


**Inventory Topics** **Page**

A. Photo Inventory ..... A1 – A5

B. Location Map ..... B1

C. Condensed Inspection Data Report (SI&A) ..... C1

D. Load Capacity Information ..... D1

E. Bridge History ..... E1

F. Field Preparation ..... F1
   1. Tools and Equipment
   2. Services
   3. Scheduling
   4. Site Conditions

G. Bridge Description and Drawings ..... G1 – G17

*H. Identification of Fracture Critical Components

I. Channel and Scour Information ..... I1 – I3
   1. Channel Profile
   *2. Scour Screening and In-Depth Scour Evaluation


*Not included in this report.

# TOPIC A

# PHOTO INVENTORY

# FLORIDA DEPARTMENT OF TRANSPORTATION
# BRIDGE MANAGEMENT SYSTEM
# BRIDGE INSPECTION REPORT

Bridge No.: 124116
Inspection Date: 11/15/07

South Approach Looking North

South Approach Looking South

# FLORIDA DEPARTMENT OF TRANSPORTATION
# BRIDGE MANAGEMENT SYSTEM
# BRIDGE INSPECTION REPORT

Bridge No.: 124116
Inspection Date: 11/15/07

North Approach Looking South

North Approach Looking North

# FLORIDA DEPARTMENT OF TRANSPORTATION
# BRIDGE MANAGEMENT SYSTEM
# BRIDGE INSPECTION REPORT

Bridge No.: 124116
Inspection Date: 11/15/07

West Elevation

East Elevation

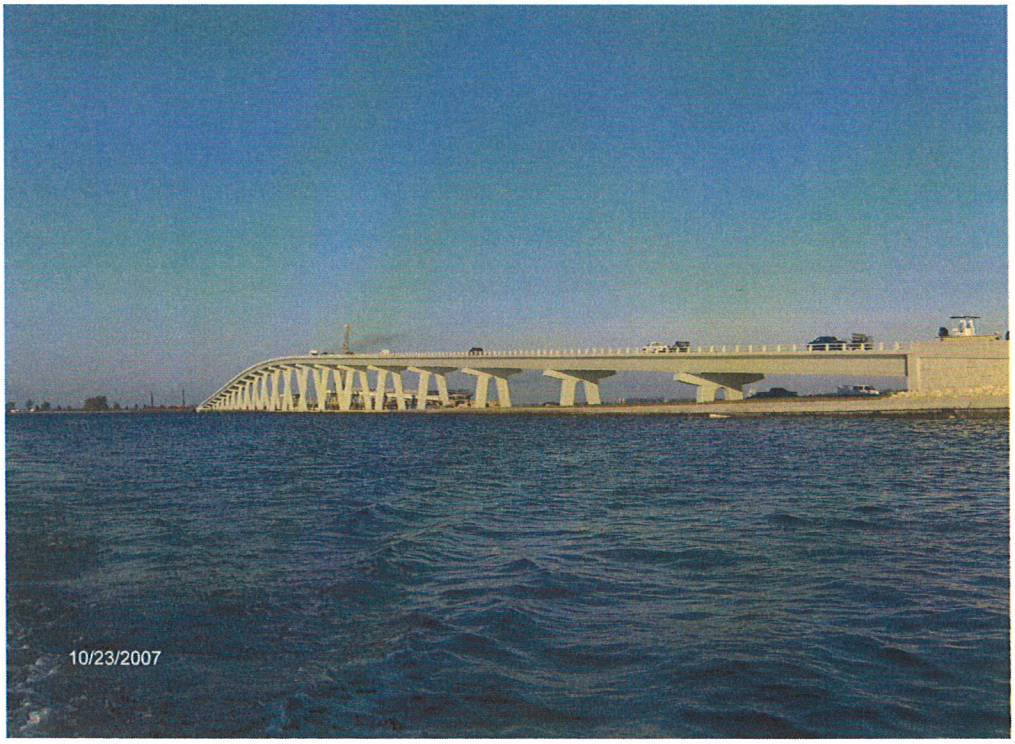

# FLORIDA DEPARTMENT OF TRANSPORTATION
# BRIDGE MANAGEMENT SYSTEM
# BRIDGE INSPECTION REPORT

Bridge No.: 124116
Inspection Date: 11/15/07

Bridge Number

Bridge Rail

# FLORIDA DEPARTMENT OF TRANSPORTATION
# BRIDGE MANAGEMENT SYSTEM
# BRIDGE INSPECTION REPORT

Bridge No.: 124116
Inspection Date: 11/15/07

Approach Guardrail Transition

Underside

# TOPIC B

# BRIDGE LOCATION MAP

# FLORIDA DEPARTMENT OF TRANSPORTATION
# BRIDGE MANAGEMENT SYSTEM
# BRIDGE INSPECTION REPORT

Bridge No.: 124116
Inspection Date: 11/15/07

## LOCATION MAP

***No Detour Route**

# TOPIC C

# DATA FILES AND REPORTS

# 4 Description

## Structure Unit Identification

Bridge/Unit Key: 124116 1
Structure Name: STRUCTURE A SANIBEL CAUSEWAY
Description:
Type: M Main

## Roadway Identification:

NBI Structure No (8) 124116
Position/Prefix (5) Route On Structure
Kind Hwy (Rte Prefix) 4 County Hwy
Design Level of Service 1 Mainline
Route Number/Suffix 00867/ 0 N/A (NBI)
Feature Intersect (6) SAN CARLOS BAY
Critical Facility Not Defense-crit
Facility Carried (7) CR 867
Mile Point (11) 0
Latitude (16) 026d28'56" Long (17) 082d01'03"

## Roadway Traffic and Accidents

Lanes (28) 2 Medians 0 Speed 35 mph
ADT Class ADT Class 4
Recent ADT (29) 19000 Year (30) 2007
Future ADT (114) 22900 Year (115) 2027
Truck % ADT (109) 7
Detour Length (19) 99.0 mi
Detour Speed -1 mph
Accident Count -1 Rate -1

## Roadway Classification

Nat. Hwy Sys (104) 0 Not on NHS
National base Net (12) Not on Base Network
LRS Inventory Rte (13a) 12 000 000 Sub Rte (13b) 00
Functional Class (26) 16 Urban Minor Arterial
On Federal Aid System Y
Defense Hwy (100) 0 Not a STRAHNET hwy
Direction of Traffic (102) 2 2-way traffic
Emergency ☑

## Roadway Clearances

Vertical (10) 99.99 ft Appr. Road (32) 40 ft
Horiz. (47) 40 ft Roadway (51) 40 ft
Truck Network (110) 0 Not part of natl netwo
Toll Facility (20) 2 On toll road
Fed. Lands Hwy (105) 0 N/A (NBI)
School Bus Route ☑
Transit Route ☑

VOLKERT & ASSOCIATES
3409 W. LEMON STREET STE 1
TAMPA, FL 33609
CERT. OF AUTHORIZATION NUMBER 4641
ROBERT J. HARRIGAN
PE# 45236

Robert J. Harrigan, P.E.
DEC 20 2007

## Structure Identification

Admin Area Lee County
District (2) D1 - Bartow
County (3) (12)Lee
Place Code (4) Sanibel
Location (9) 1ST STRCT S/O TOLL PLAZA
Border Br St/Reg (98) Not Applicable (P) Share 0 %
Border Struct No (99)
FIPS State/Region (1) 12 Florida Region 4-Atlanta
NBIS Bridge Len (112) Meets NBI Length
Parallel Structure (101) No || bridge exists
Temp. Structure (103) Not Applicable (P)
Maint. Resp. (21) 2 County Hwy Agency
Owner (22) 2 County Hwy Agency
Historic Signif. (37) 5 Not eligible for NRHP

## Geometrics

Spans in Main Unit (45) 21
Approach Spans (46) 0
Length of Max Span (48) 144.2 ft
Structure Length (49) 3002.5 ft
Deck Area 129408 sqft
Structure Flared (35) 0 No flare

## Age and Service

Year Built (27) 2007
Year Reconstructed (106)
Type of Service On (42a) 1 Highway
Under (42b) 5 Waterway
Fracture Critical Details Not Applicable

## Structure Type and Material

Curb/Sidewalk (50): Left 0 ft Right 0 ft
Bridge Median (33): 0 No median
Main Span Material (43A): 6 P/S Conc Continuous
Appr Span Material (44A): Not Applicable (P)
Main Span Design (43B): 02 Stringer/Girder
Appr Span Design (44B): Not Applicable (P)

## Deck Type and Material

Deck Width (52): 43.1
Skew (34): 0
Deck Type (107): 1 Concrete-Cast-in-Place
Surface (108): 0 None
Membrane: 0 None
Deck Protection: None

# 3 Appraisal

## Structure Appraisal

Open/Posted/Closed (41) A Open, no restriction
Deck Geometry (68) 5 Above Tolerable
Underclearances (69) N Not applicable (NBI)
Approach Alignment (72) 9-No Speed Red No Curve
Bridge Railings (36a) 1 Meets Standards
Transitions (36b) 1 Meets Standards
Approach Guardrail (36c) 1 Meets Standards
Approach Guardrail ends (36d) 1 Meets Standards
Scour Critical (113) T Tidal, Low Risk

## Navigation Data

Navigation Control (38) Permit Required
Nav Vertical Clr (39) 70 ft
Nav Horizontal Clr (40) 111.2 ft
Min Vert Lift Clr (116) 0 ft
Pier Protection (111) 2 In-Place, Functioning

## NBI Condition Rating

Sufficiency Rating 68
Health Index 99.82
Structural Eval (67) 5 Above Min Tolerable
Deficiency Not Deficient

## Minimum Vertical Clearance

Over Structure (53) 99.99 ft
Under (reference) (54a) N Feature not hwy or RR
Under (54b) 0 ft

## Minimum Lateral Underclearance

Reference (55a) N Feature not hwy or RR
Right Side (55b) 0 ft
Left Side (56) 0 ft

## Load Rating

Design Load (31) HL 93
Rating Date 8/1/2007 Initials RS
Posting (70) 5 At/Above Legal Loads

Operating Type (63) 3 LRFR Load & Res. Fact
Operating rating (64) 60.9 tons Alternate -1
Inventory Type (65) 3 LRFR Load & Res. Fact
Inventory Rating (66) 47.7 tons Alternate -1
Alt Meth -1

# 6 Schedule

## Current Inspection

Inspection Date: 11/15/2007
Inspector: KN738WW-P - Wade Wolfe
Bridge Group: BD523
Primary Type: Regular NBI
Review Required: ☑

## Next Inspection Date Scheduled

NBI: 11/15/2009
Element: 11/15/2009
Fracture Critical:
Underwater: 11/15/2009
Other/Special:

## 6 Schedule Cont.

**Inspection Types Performed** NBI ☑ Element ☑ Fracture Critical ☐ Underwater ☑ Other Special ☐

| Inspection Intervals | Required (92) | Frequency (92) | Last Date (93) |
|---|---|---|---|
| Fracture Critical | ☐ | mos | |
| Underwater | ☑ | 24 mos | 10/02/2007 |
| Other Special | ☐ | mos | |
| NBI | | 24 mos (91) | 11/15/2007 (90) |

**Inspection Resources**

| | |
|---|---|
| Crew Hours | 40 |
| Flagger Hours | 0 |
| Helper Hours | 0 |
| Snooper Hours | 6 |
| Special Crew Hours | 32 |
| Special Equip Hours | 12 |

## 5 Custom

### General Bridge Information

| | |
|---|---|
| Parallel Bridge Seq | 0000 |
| Channel Depth | 25.2 ft |
| Radio Frequency | -1 |
| Phone Number | (000) 000-0000 |
| Exception Date | |
| Exception Type | Unknown |
| Accepted By Maint | 00/00/0000 |
| Warranty Expiration | 00/00/0000 |
| Bridge Rail 1 | Steel barrier |
| Bridge Rail 2 | Not applicable-No rail |
| Electrical Devices | Navigation lights only |
| Culvert Type | Not applicable |
| Maintenance Yard | 0 |
| FIHS ON / OFF | No Routes on FIHS |
| Previous Structure | 124043 |

### Bridge Load Rating Information

| | |
|---|---|
| HS20 Govr. Span Length | 144 ft |
| L-Rating Origination | Design Plans |
| Load Rating Date | 08/01/2007 |
| Method Calculation | AASHTO formula |
| Load Dist. Factor | 0.982 |
| Impact Factor | 1 |
| Design Method | LRFD (Load & Res Factor) |
| Design Measure | English |
| Recommend SU Posting | 99 tons |
| Recommend C Posting | 99 tons |
| Recommend T Posting | 99 tons |
| Gov FB Span | 0 ft |
| Gov FB Spacing | 0 ft |
| FB HS20 Rating | 0 |
| FB SU4 Rating | 0 tons |
| FB Present | N |
| FB INV Rating Factor | 0 |
| FB OPR Rating Factor | 0 |
| FB FL 120 | 0 tons |
| Single Unit Truck 2 Axles | -1 tons |
| Single Unit Truck 3 Axles | -1 tons |
| Single Unit Truck 4 Axles | -1 tons |
| Combination Unit Truck 3 Axles | -1 tons |
| Combination Unit Truck 4 Axles | -1 tons |
| Combination Unit Truck 5 Axles | -1 tons |
| Truck Trailer 5 Axles | -1 tons |
| Posting Weight | 99 tons |
| Actual SU Posting | 99 tons |
| Actual C Posting | 99 tons |
| Actual T Posting | 99 tons |
| FL 120 Long Gov Span | 110 tons |
| FL 120 Trans | -1 tons |
| Single Axle Trans | -1 tons |
| Tandem Axle Trans | -1 tons |
| Wing Span | -1 ft |
| Web to Web Span | -1 ft |
| HS20 OPR Rating Max Span | -1 tons |
| FL120 Long Max Span | 110 tons |

### Bridge Scour and Storm Information

| | |
|---|---|
| Pile Driving Record | All pile driving records |
| Foundation Type | Foundation details |
| Mode of Flow | Tidal |
| Rating Scour Eval | Low Risk - High |
| Highest Scour Eval | No phase completed |
| Scour Recommended I | No recommendation |
| Scour Recommended II | No recommendation |
| Scour Recommended III | No recommendation |
| Scour Elevation | 999 |
| Action Elevation | 999 |
| Storm Frequency | 100 |

## 1 Condition

### NBI Rating

| | |
|---|---|
| Channel (61) | 8 Protected |
| Deck (58) | 8 Very Good |
| Superstructure (59) | 6 Satisfactory |
| Substructure (60) | 5 Fair |
| Culvert (62) | N N/A (NBI) |
| Waterway (71) | 8 Equal Desirable |
| Unrepaired Spalls | -1 |
| Review Required | ☑ |

**Elements**

**Inspection Date: 11/15/2007 GPFO**

| Span Id | Elem/En | Description | Qty1 | %1 | Qty2 | %2 | Qty3 | %3 | Qty4 | %4 | Qty5 | %5 | T Qty |
|---|---|---|---|---|---|---|---|---|---|---|---|---|---|
| Structure l | 12/4 | Bare Concrete Deck | 129408 | 100. | 0 | . | 0 | . | 0 | . | 0 | . | **129408 sf.** |

**Notes**

| | | | | | | | | | | | | | |
|---|---|---|---|---|---|---|---|---|---|---|---|---|---|
| Structure l | 300/4 | Strip Seal Exp Joint | 345 | 100. | 0 | . | 0 | . | 0 | . | 0 | . | **345 lf.** |

**Notes** NOTE: This element quantifies joints 1, 4, 7, 10, 13, 16, 19 and 22.

| | | | | | | | | | | | | | |
|---|---|---|---|---|---|---|---|---|---|---|---|---|---|
| Structure l | 334/4 | Metal Rail Coated | 6005 | 100. | 0 | . | 0 | . | 0 | . | 0 | . | **6005 lf.** |

**Notes** NOTE: Barriers meet NCHRP TL4 criteria and meet SIA Item 36 standards.

CS1: There are several tire marks on the barriers.

| | | | | | | | | | | | | | |
|---|---|---|---|---|---|---|---|---|---|---|---|---|---|
| Structure l | 109/4 | P/S Conc Open Girder | 11998 | 99.9 | 12 | .1 | 0 | . | 0 | . | 0 | . | **12010 lf.** |

**Notes** CS1: The beams have between 3 and 5 diagonal web cracks up to 4ft long x less than 1/64in wide, within 5ft of the bearings.

The east face of beam 14-4 has a 10in x 1/64in vertical bottom flange crack, 3in from the bearing.

The left top flange of beam 17-4 has wide spread longitudinal hairline cracking with efflorescence and some cracks up to 1/64in wide near pier 18.

CS2: There are beam end /closure pour delaminations and spalls at pier 11 as follows:
10/11-1, east and west faces, delamination, 10in x 5in;
10/11-2, west face, spall with no exposed steel, delamination, 24in x 4in x 2in;
10/11-3, west face, spall with no exposed steel, 10in x 10in x 1/2in;
10/11-4, west face, delamination, 6in x 5in;
10/11-4, east face, spall with exposed steel, 42in x 12in x 5in. Refer to Photo 1. REPAIR ALL

There are minor bottom flange spalls with no exposed steel as follows:
Beam 15-1, east face near pier 16, 6in x 2in x 1/2in;
Beam 15-3, east face at 7/8pt, 4in x 4in x 1in;
Beam 15-4, west face at 1/2pt, 16in x 4in x 1in.

| | | | | | | | | | | | | | |
|---|---|---|---|---|---|---|---|---|---|---|---|---|---|
| Structure l | 397/4 | Drain. Syst Metal | 20 | 100. | 0 | . | 0 | . | 0 | . | 0 | . | **20 ea.** |

**Notes** CS1: Most scupper down spouts are not properly shimmed or anchored to the beams. Refer to Photo 2. REPAIR

| | | | | | | | | | | | | | |
|---|---|---|---|---|---|---|---|---|---|---|---|---|---|
| Structure l | 310/4 | Elastomeric Bearing | 168 | 100. | 0 | . | 0 | . | 0 | . | 0 | . | **168 ea.** |

**Notes**

| | | | | | | | | | | | | | |
|---|---|---|---|---|---|---|---|---|---|---|---|---|---|
| Structure l | 563/4 | Acc Ladd & Plat | 16 | 100. | 0 | . | 0 | . | 0 | . | 0 | . | **16 ea.** |

**Notes** NOTE: Quantity includes eight ladders and eight platforms including two fender access walkways.

| | | | | | | | | | | | | | |
|---|---|---|---|---|---|---|---|---|---|---|---|---|---|
| Structure l | 580/4 | Navigational Lights | 1 | 100. | 0 | . | 0 | . | 0 | . | 0 | . | **1 ea.** |

**Notes** NOTE: Element includes six fender lights, two clearance gauge lights and two swing lights. Only temporary lighting was in place at time of inspection.

| | | | | | | | | | | | | | |
|---|---|---|---|---|---|---|---|---|---|---|---|---|---|
| Structure l | 205/4 | R/Conc Column | 40 | 100. | 0 | . | 0 | . | 0 | . | 0 | . | **40 ea.** |

**Notes**

**Elements**

**Inspection Date: 11/15/2007 GPFO**

| Span Id | Elem/En | Description | Qty1 | %1 | Qty2 | %2 | Qty3 | %3 | Qty4 | %4 | Qty5 | %5 | T Qty |
|---|---|---|---|---|---|---|---|---|---|---|---|---|---|
| Structure l | 207/4 | P/S Conc Holl Pile | 220 | 98.21 | 2 | .89 | 0 | . | 2 | .89 | 0 | . | **224 ea.** |

**Notes** CS2: Pile 11-1 has two spalls with no exposed steel up to 6in x 6in x 1-1/2in.

Pile 17-10 has an intermittent 13ft x 12in x 3in spall with no exposed steel on the NE corner beginning 2ft below the footer.

CS4: The upper 7ft of piles 11-8 and 11-15 are fractured and all prestress strands are exposed. Refer to Sketch 1. REPAIR

| | | | | | | | | | | | | | |
|---|---|---|---|---|---|---|---|---|---|---|---|---|---|
| Structure l | 215/4 | R/Conc Abutment | 70 | 100. | 0 | . | 0 | . | 0 | . | 0 | . | **70 lf.** |

**Notes**

| | | | | | | | | | | | | | |
|---|---|---|---|---|---|---|---|---|---|---|---|---|---|
| Structure l | 220/4 | R/C Sub Pile Cap/Ftg | 19 | 95. | 1 | 5. | 0 | . | 0 | . | 0 | . | **20 ea.** |

**Notes** CS2: Footer 17 has two spalls with no exposed steel up to 12in x 12in x 2in on the northeast and southeast corners.

| | | | | | | | | | | | | | |
|---|---|---|---|---|---|---|---|---|---|---|---|---|---|
| Structure l | 234/4 | R/Conc Cap | 862 | 100. | 0 | . | 0 | . | 0 | . | 0 | . | **862 lf.** |

**Notes** CS1: Both shear blocks in span 10 at pier 10 and the right block in span 11 at pier 12 are fractured. Refer to Photo 3. REPAIR

| | | | | | | | | | | | | | |
|---|---|---|---|---|---|---|---|---|---|---|---|---|---|
| Structure l | 387/4 | P/S Fender/Dolphin | 588 | 100. | 0 | . | 0 | . | 0 | . | 0 | . | **588 lf.** |

**Notes** NOTE: Quantity includes dolphins. Fenders and dolphins incomplete at time of inspection.

| | | | | | | | | | | | | | |
|---|---|---|---|---|---|---|---|---|---|---|---|---|---|
| Structure l | 396/4 | Other Abut Slope Pro | 2500 | 100. | 0 | . | 0 | . | 0 | . | 0 | . | **2500 sf.** |

**Notes** NOTE: Element includes rock rubble rip rap and articulating concrete block mats. Under construction at time of inspection.

| | | | | | | | | | | | | | |
|---|---|---|---|---|---|---|---|---|---|---|---|---|---|
| Structure l | 290/4 | Channel | 1 | 100. | 0 | . | 0 | . | 0 | . | 0 | . | **1 ea.** |

**Notes**

| | | | | | | | | | | | | | |
|---|---|---|---|---|---|---|---|---|---|---|---|---|---|
| Structure l | 321/4 | R/Conc Approach Slab | 2 | 100. | 0 | . | 0 | . | 0 | . | 0 | . | **2 ea.** |

**Notes**

| | | | | | | | | | | | | | |
|---|---|---|---|---|---|---|---|---|---|---|---|---|---|
| Structure l | 478/4 | MSE Walls | 120 | 100. | 0 | . | 0 | . | 0 | . | 0 | . | **120 lf.** |

**Notes** NOTE: Quantity refers to 30LF at each corner.

**Total Number of Elements:** 18

## Inspection Information

**Inspection Date:** 11.15.2007 **Type:** Regular NBI

**Inspector:** KN738WW-P - Wade Wolfe

**Inspection Notes:** Sufficiency Rating Calculation Accepted by KNVOLCW-P at 2007-12-13 11:47:06
Sufficiency Rating Calculation Accepted by KNVOLCW-P at 2007-12-04 11:53:05

LOAD CAPACITY EVALUATION:
The load rating dated 8/1/07 applies to the current condition of this bridge.

Construction of fenders, dolphins, slope protection and navigation lighting still in progress. Demolition of replaced structure ongoing. Left side groundline measurements not taken due to demolition.

Structure sustained damage due to demolition of replaced structure. Refer to Elements 109 P/S Conc Open Girder, 207 P/S Conc Holl Pile and 234 R/Conc Cap.

## Structure Notes

OWNER: LEE COUNTY

TRAFFIC RESTRICTION: Based on the load rating analysis dated 8/1/07, the structure does not require posting. The structure is not posted.

Structure inventoried from south to north on a west to east leg of a south to north roadway. Direction of stationing is used to describe deficiency locations. (Left is West).

This structure replaces a bascule bridge 124043. The nearest structures are also on the causeway and are numbered 124114 and 124115.

Lane shift required for underbridge inspection vehicle. Power boat with fathometer used for groundline measurements.

# TOPIC D

# LOAD CAPACITY INFORMATION

Form Revision: 27-Jun-07

# BRIDGE LOAD RATING SUMMARY FORM

**BRIDGE DATA**

| | |
|---|---|
| Bridge Number: | 124116 |
| Struct. Type Main [Item 43] @: | 602 |
| Struct. Type Appr. [Item 44] @: | 602 |

**POSTING DATA**

| | |
|---|---|
| **Current Restrictions** | |
| Item 41 @: | Open, No Restrictions |
| Is Posting Needed: | No |
| **Proposed Restrictions** | |
| Item 70 @: | At/Above Legal Loads |

**PROGRAM USED**

ConSpan

**BASIS FOR ANALYSIS**

| | |
|---|---|
| Design Drawings: | Yes |
| As-Built Drawings: | No |
| Shop Drawings: | No |
| Field Measurements: | No |
| Coupon Testing: | No |
| Other: | |

**LIVE LOAD DISTRIBUTION**

| | |
|---|---|
| AASHTO LFD: | |
| AASHTO LRFD: | X |
| SALOD: | |
| BRUFEM: | |
| Finite Element on Grillage: | |

**LONGITUDINAL GOVERNING COMPONENT**

| | |
|---|---|
| Main/Approach Span: | Approach |
| Description: | Multi-Beam |
| Material: | Prestressed Conc |
| Simple/Continuous Span: | Continuous |
| Span Length: | 144'-0" |
| Flexure, Shear or Principal Tension: | Flexure |

**TRANSVERSE GOVERNING COMPONENT**

| | |
|---|---|
| Main/Approach Span: | Approach |
| Description: | Slab |
| Material: | Concrete |
| Deck, Box or Substructure: | Deck |
| Flexure, Shear or Principal Tension: | Flexure |

**OTHER SPAN OF INTEREST**
(If Applicable)

**OTHER SPAN OF INTEREST**
(If Applicable)

## PONTIS DATABASE INPUT

### PONTIS APPRAISAL TAB

| Description (NBIS Code) | Value | |
|---|---|---|
| Design Load (31) @ | HL93 | |
| HL93, M9 (H10), M13.5 ((H15), M13.5 (HS15), M18 (H20), MS18 (HS20), MS18 (HS20)+Mod, Pedestrian, Railroad, MS22.5 (HS25), Unknown (NBI), Unknown (P), Not Applicable (P) | | |
| Operating Type (63) @ | Load & Resistance Factor | |
| Unknown, Load Factor, Allowable Stress, Load & Resistance Factor, Load Test, No Rating, Unknown (NBI), Not Applicable (P) | | |
| Operating Rating (64)* @ ( ) | 47.7 | Tons |
| Inventory Type (65) @ | Load & Resistance Factor | |
| Unknown, Load Factor, Allowable Stress, Load & Resistance Factor, Load Test, No Rating, Unknown (NBI), Not Applicable (P) | | |
| Inventory Rating (66)* @ ( ) | 60.9 | Tons |

### LEGEND

- * If rating is provided as a factor from an LRFR analysis, multiply the rating factor by 36 tons
- ** If not calculated, enter "-1"
- # LRFR Rating Only
- ## If Posting is not required, enter "99"
- @ BMS Coding Manual available on the FDOT Office of Maintenance website
- ( ) List Controlling Member & (M=moment, V=shear, pt=post-tensioning) for this Rating

### PONTIS LOAD RATING 1 TAB

| Description (NBIS Code) | Value | |
|---|---|---|
| HS 20/HL 93 Governing Span Length | 144' | FT |
| Load Rating Origination | Design Plans | |
| Unknown, Design Plans, As-Built Plans, Field Measurements | | |
| Load Rating Date | 01-Aug-07 | |
| Method Calculation | AASHTO Formula | |
| Unknown, AASHTO Formula, SALOD, BRUFEM, Other | | |
| Load Distribution Factor | 0.9820 | |
| Impact Factor | 1.33 | |
| Design Method | LRFD | |
| Unknown, Working Stress, Load Factor, LRFD, Others | | |
| Design Measure | English | |
| Unknown, English, Systeme International | | |

### TRUCK OPERATING RATINGS

| | | | |
|---|---|---|---|
| SU 2** | Enter Contr. Mem. ( ) | -1.0 | Tons |
| SU 3** | Enter Contr. Mem. ( ) | -1.0 | Tons |
| SU 4** | Enter Contr. Mem. ( ) | -1.0 | Tons |
| C 3** | Enter Contr. Mem. ( ) | -1.0 | Tons |
| C 4** | Enter Contr. Mem. ( ) | -1.0 | Tons |
| C 5** | Enter Contr. Mem. ( ) | -1.0 | Tons |
| ST 5** | Enter Contr. Mem. ( ) | -1.0 | Tons |
| Recommended SU Posting ## | | 99 | Tons |
| Recommended C Posting ## | | 99 | Tons |
| Recommended ST Posting ## | | 99 | Tons |

### PONTIS LOAD RATING 2 TAB

| Description (NBIS Code) | Value | |
|---|---|---|
| FL 120 Longitudinal Governing Span Rating | 110.0 | Tons |

#### SEGMENTAL

| | | |
|---|---|---|
| FL 120 Transverse Rating (Segmental)** | -1.0 | Tons |
| Single Axle Transverse Rating** | -1.0 | Tons |
| Tandem Axle Transverse Rating** | -1.0 | Tons |
| Wing Span** | -1.00 | FT |
| Web-to-Web Span** | -1.00 | FT |

#### MAXIMUM SPAN

| | | |
|---|---|---|
| HS 20 Operating Rating Maximum Span** | -1.0 | Tons |
| FL 120 Longitudinal Maximum Span # | 110.0 | Tons |

#### FLOOR BEAM

| | | |
|---|---|---|
| Floor Beam Present | No = Stop<br>Yes = Continue | |
| Governing Floor Beam Span** | | FT |
| Governing Floor Beam Spacing** | | FT |
| Floor Beam HS 20 Rating** | | Tons |
| Floor Beam SU 4 Rating** | | Tons |
| Floor Beam Inventory Rating Factor** # | | |
| Floor Beam Operating Rating Factor **# | | |
| Floor Beam FL 120 Rating # | | Tons |

### COMMENTS BY ENGINEER


Responsible Engineer: Ronald Sanchez
FL P.E. #: 58923
Date: 01-Aug-07
Address: 1000 Sawgrass Corporate Pkwy
Sunrise, FL 33322


### COMPUTATIONS

| | | | |
|---|---|---|---|
| Performed By: | Ronald Sanchez | Date: | 10-Oct-03 |
| Checked By: | Jose R. Vazquez | Date: | 20-Oct-03 |
| Reviewed By: | Steve Hedge | Date: | 08-Aug-07 |

# TOPIC E

# BRIDGE HISTORY

# FLORIDA DEPARTMENT OF TRANSPORTATION
# BRIDGE MANAGEMENT SYSTEM
# BRIDGE INSPECTION REPORT

Bridge No.: 124116
Inspection Date: 11/15/07

## BRIDGE HISTORY

This structure was built in 2007 for Lee County.

The structure was completed under Lee County Project No. 5807, Lee County Contract No. 2318.

The structure was designed by Hardesty & Hanover; the contractor was Boh Brothers Construction Co.

# TOPIC F

# FIELD PREPARATION

# FLORIDA DEPARTMENT OF TRANSPORTATION
# BRIDGE MANAGEMENT SYSTEM
# BRIDGE INSPECTION REPORT

Bridge No.: 124116
Inspection Date: 11/15/07

## FIELD PREPARATION

1. Tools and Equipment:
   Normal Bridge Inspection Tools

2. Services:
   N/A

3. Scheduling:
   Daytime Hours

4. Site Conditions:
   Traffic – Estimated A.D.T. 19,000 Estimated % of Truck Traffic: 7
   Stream Flows: Moderate
   Vegetation Conditions: None
   Waterway: Good
   Embankment Conditions: Good

5. Traffic Control Requirements:
   Lane Shift for Underbridge Inspection

6. Underwater Inspection Requirements:
   Scuba

7. Special Access Requirements:
   Underbridge Snooper, Power boat

8. Manhours:
   Travel to and from site: 3 hours x 2 people = 6
   Inspection hours: 20 hours x 2 people = 40

9. Plans Available:
   Yes

# TOPIC G

# BRIDGE DESCRIPTION AND DRAWINGS

# FLORIDA DEPARTMENT OF TRANSPORTATION
# BRIDGE MANAGEMENT SYSTEM
# BRIDGE INSPECTION REPORT

Bridge No.: 124116
Inspection Date: 11/15/07

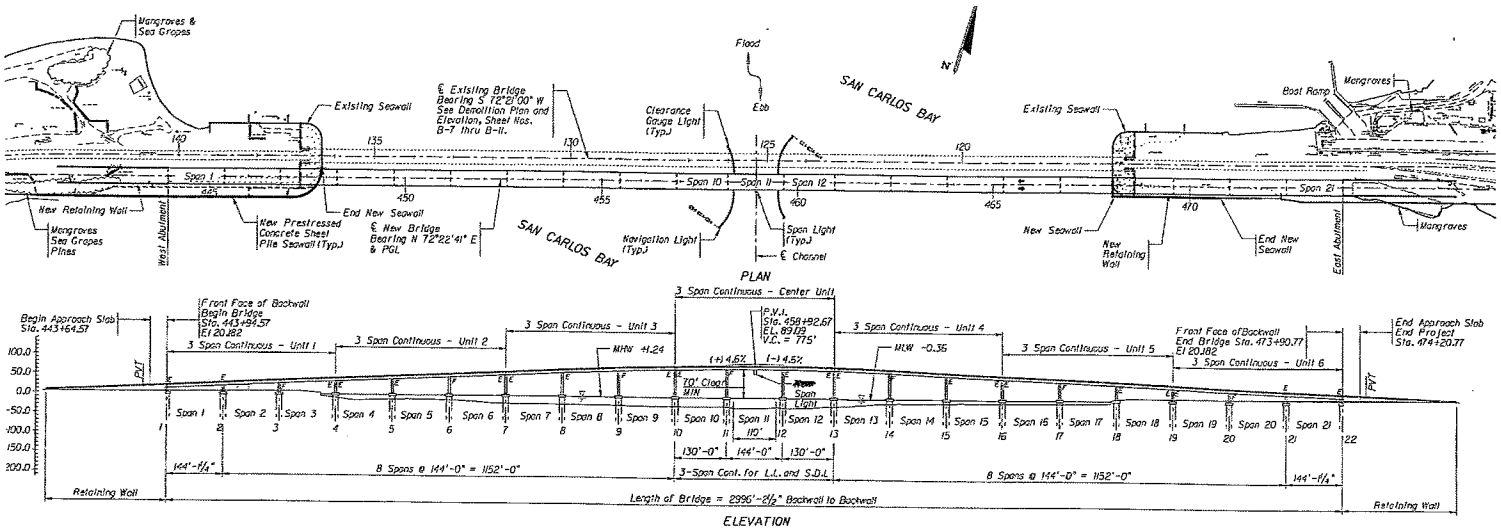


PLAN & ELEVATION

# FLORIDA DEPARTMENT OF TRANSPORTATION
# BRIDGE MANAGEMENT SYSTEM
# BRIDGE INSPECTION REPORT

Bridge No.: 124116
Inspection Date: 11/15/07

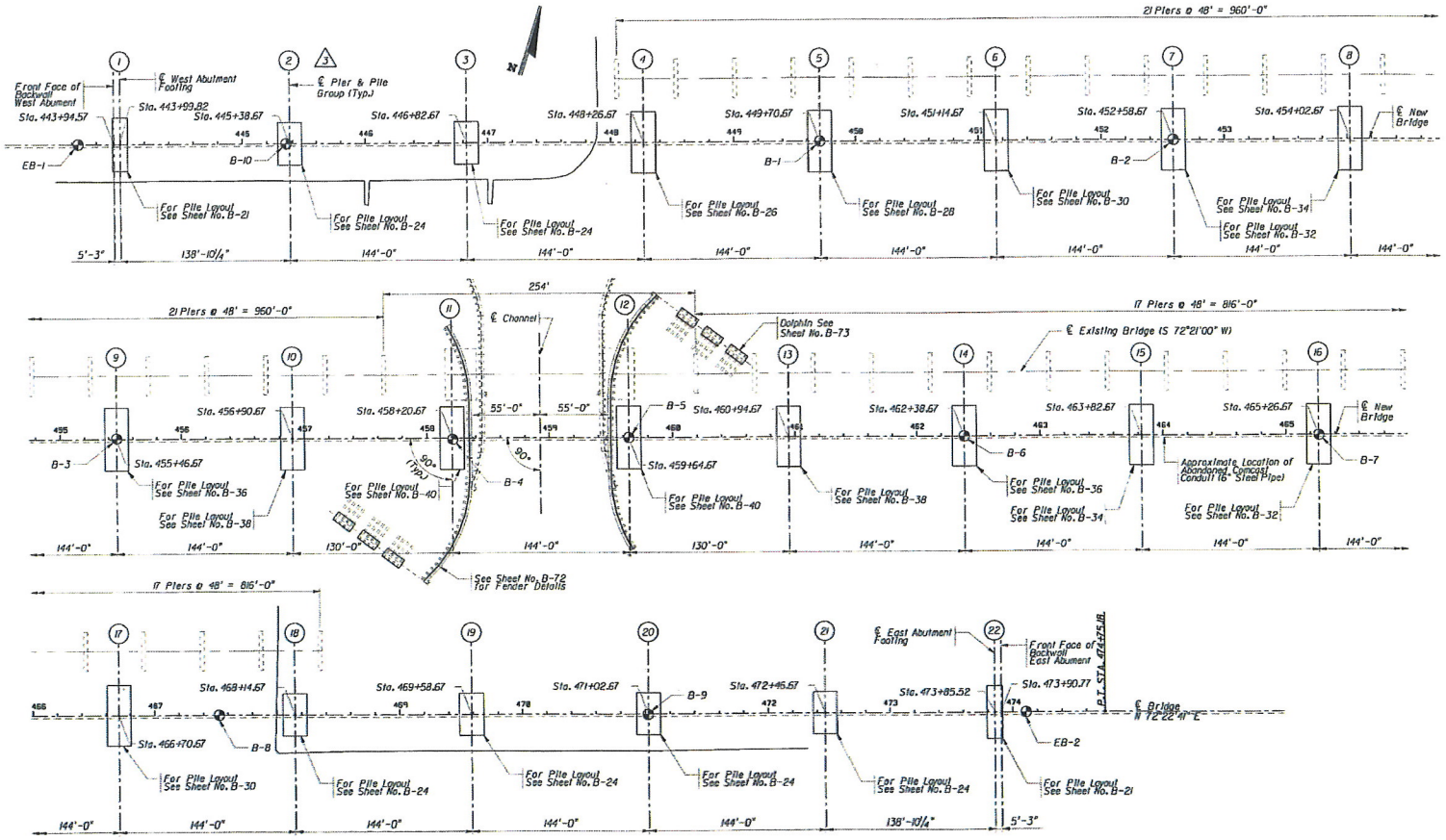


FOUNDATION LAYOUT

# FLORIDA DEPARTMENT OF TRANSPORTATION
# BRIDGE MANAGEMENT SYSTEM
# BRIDGE INSPECTION REPORT

Bridge No.: 124116
Inspection Date: 11/15/07

## GENERAL STRUCTURAL NOTES:

A. DESIGN LOADS

1. DEAD LOADS:
   A. UNIT WEIGHT OF REINFORCED CONCRETE 150 PCF
   B. UNIT WEIGHT FOR UTILITIES IS 50 PLF PER BEAM
   C. UNIT WEIGHT OF STRUCTURAL STEEL IS 490 PCF.

2. LIVE LOADS: DESIGN LIVE LOAD IS HL-93 AS PER AASHTO.

| LIVE LOAD DISTRIBUTION FACTORS | | |
|---|---|---|
| | MOMENT | SHEAR |
| EXTERIOR BEAM | 1.006 | 1.006 |
| INTERIOR BEAM | 0.830 | 1.047 |

3. WIND LOADS: WIND LOADS HAVE BEEN COMPUTED WITH THE AASHTO LRFD SPECIFICATION USING A 100 MPH BASE DESIGN WIND VELOCITY AND "OPEN COUNTRY" CLASSIFICATION.

4. EARTHQUAKE: THE BRIDGE HAS BEEN DESIGNED TO MEET THE MINIMUM BEARING SUPPORT LENGTH DIMENSION DEFINED BY SECTION 4.7.4.4. OF THE ASSHTO LRFD SPECIFICATIONS.

5. THERMAL FORCES:

   A. SEASONAL VARIATION:
      1. TEMPERATURE RANGE FOR DESIGN OF STRUCTURE:
         TEMPERATURE RISE = 30 F
         TEMPERATURE FALL = 40 F

      2. SIZING BEARING AND JOINTS:
         TEMPERATURE RISE = 25 F
         TEMPERATURE FALL = 25 F

   B. MEAN TEMPERATURE = 70 F
   C. THERMAL COEFFICIENT = 0.000006 PER DEGREE F

6. CREEP AND SHRINKAGE:

   STRAINS ARE AS PER AASHTO AND THE FDOT LRFD STRUCTURES DESIGN GUIDELINES.
   ULTIMATE CONCRETE SHRINKAGE COEFFICIENT = 0.0004 IN/IN

7. SHIP VESSEL IMPACT: VESSEL IMPACT FORCES BASED ON AASHTO LRFD METHOD II AND PAST POINT 21. FORCES ARE APPLIED TO PIERS AND FENDER SYSTEM PARALLEL TO TIDAL FLOW.

| PIER | IMPACT FORCE |
|---|---|
| 11,12 | 1200 KIPS |
| 8,9,10,13,14,15 | 1000 KIPS |
| 5,6,7,16,17 | 800 KIPS |
| 4 | 500 KIPS |

8. FOUNDATION ELEMENT:

   30" SQUARE, PRECAST PRESTRESSED VOIDED DRIVEN PILES. PILE DATA CAN BE FOUND ON SHEET NO. B-16

9. ENVIRONMENT:

   SUPERSTRUCTURE: CORROSIVE (EXTREMELY AGGRESSIVE)
   SUBSTRUCTURE: CORROSIVE (EXTREMELY AGGRESSIVE)
   LOCATION: COASTAL SALTWATER

10. STAY-IN-PLACE FORMS ARE NOT PERMITTED DUE TO EXTREMELY AGGRESSIVE ENVIRONMENT.

11. SCOUR HAS BEEN CONSIDERED IN THE DESIGN OF THE PILES AND ARE BASED ON THE FLOOD DATA SHOWN ON THE BRIDGE HYDRAULIC RECOMMENDATION SHEET (SHEET NO. G-1).

B. ALLOWABLE STRESSES/LOADS:

1. REINFORCED CONCRETE: AS PER AASHTO.

2. PRESTRESSED CONCRETE:

   CONCRETE STRENGTH AT TRANSFER, $f'ci = 0.8f'c =$ 6.8 KSI
   CONCRETE STRENGTH AT 28 DAYS, $f'c =$ 8.5 KSI

   TEMPORARY STRESSES BEFORE LOSSES:

   COMPRESSION = $0.60f'ci$
   TENSION (WITHOUT BONDED REINFORCEMENT) = 0.200 KSI
   TENSION (WITH BONDED REINFORCEMENT) = 0.625 KSI

   SERVICE LIMIT STATES AFTER LOSSES, FULLY PRESTRESSED:

   DUE TO EFFECTIVE PRESTRESS AND PERMANENT LOADS = $0.45f'c$ (3.82 KSI)

   DUE TO LL AND 1/2 THE SUM OF EFFECTIVE PREST. AND PERMANENT LOADS = $0.40f'c$ (3.40 KSI)

   DUE TO PRESTRESS, PERMANENT AND TRANSIENT/LIVE LOAD = $0.6f'c$ (5.10 KSI)
   TENSION (UNLESS OTHERWISE NOTED) $3\sqrt{f'c}$ (0.28 KSI)
   OUTER 15% @ TOP OF BEAM $6\sqrt{f'c}$ (0.56 KSI)

C. MATERIALS:

1. CONCRETE: (28 DAY CYLINDER STRENGTH AS NOTED):

   A. PRESTRESSED CONCRETE BEAMS (FLORIDA TEE-BEAMS) CLASS VI 8,500 PSI

   B. CAST IN PLACE SUPERSTRUCTURE (BRIDGE DECK, DIAPHRAGMS, SHEAR BLOCKS, SEAWALL CAPS AND BARRIERS): CLASS IV 5,500 PSI.

   C. CAST IN PLACE SUPERSTRUCTURE (APPROACH SLABS): CLASS II (BRIDGE DECK) 4,500 PSI

   D. CAST IN PLACE SUBSTRUCTURE (ABUTMENTS, FOOTINGS, PIERS INCLUDING COLUMNS, CAPS, PEDESTALS AND SHEAR BLOCKS) : CLASS IV 5,500 PSI.

   E. PRESTRESSED CONCRETE PILES, CONCRETE SHEET PILES, AND SEAWALL CAP: CLASS V SPECIAL 6,000 PSI

   F. MAXIMUM AGGREGATE SIZE FOR PRECAST MEMBERS = 3/4"

   G. CORROSION PROTECTION REQUIREMENTS:
      MICROSILICA IS REQUIRED IN THE CONCRETE AT THE FOLLOWING LOCATIONS:
      ALL PIERS ABOVE PILE CAP, SEAWALL CAP AND PRECAST CONCRETE SHEET PILES.

   H. PROVIDE 3/4" CHAMFERS ON ALL EXPOSED EDGES, UNLESS OTHERWISE NOTED.

   I. CONSTRUCTION JOINTS WILL BE PROVIDED ONLY AT LOCATIONS INDICATED IN THE PLANS. ADDITIONAL CONSTRUCTION JOINTS OR ALTERATIONS TO THOSE SHOWN SHALL REQUIRE WRITTEN APPROVAL OF THE ENGINEER.

2. REINFORCING STEEL:
   A. ASTM A 615, GRADE 60, UNLESS OTHERWISE NOTED.
   B. CONCRETE COVERS SHALL BE AS FOLLOWS (UNLESS OTHERWISE NOTED):

   SUPERSTRUCTURE (PRECAST):
   PRESTRESSED BEAMS: 2"
   PRESTRESSED BEAMS - TOP OF TOP FLANGE: 1"
   TOP DECK SURFACE: 2 1/2"
   ALL OTHER SURFACES: 2"

   SUBSTRUCTURE:
   EXTERNAL SURFACES AGAINST EARTH AND WATER: 4 1/2"
   EXTERNAL SURFACE FORMED: 4"
   TOP OF BEAM PEDESTALS: 2"
   SEAWALL CAPS: 4"
   PRESTRESSED PILES & CONCRETE SHEET PILES: 3"

   CONCRETE COVER SHOWN IN THE PLANS DO NOT INCLUDE REINFORCEMENT PLACEMENT AND FABRICATION TOLERANCES UNLESS SHOWN AS "MINIMUM COVER". SEE SPECIFICATIONS FOR ALLOWABLE REINFORCEMENT PLACEMENT TOLERANCES.

   C. WELDED WIRE FABRIC SHALL CONFORM TO ASTM A185.

3. PRESTRESSING STEEL: (PRESTRESSED CONCRETE BEAMS ONLY)

   STRAND ASTM A 416 GRADE 270, LOW RELAXATION
   PRESTRESSING PARAMETERS (STRAND):

   APPARENT MODULUS: 28,000 KSI
   MAXIMUM JACKING STRESS: 216 KSI (80% ULTIMATE)
   MAXIMUM ANCHORING STRESS AT ANCHOR:
   202 KSI (75% ULTIMATE) FOR PRETENSIONING
   STRAND DIAMETER 0.60"

## GENERAL NOTES:

1. GENERAL SPECIFICATIONS:

   FLORIDA DEPARTMENT OF TRANSPORTATION STANDARD SPECIFICATIONS FOR ROAD AND BRIDGE CONSTRUCTION, 2004 EDITION, INCLUDING ALL SUPPLEMENTAL AND SPECIAL PROVISIONS THERETO.

2. DESIGN SPECIFICATIONS

   A. AMERICAN ASSOCIATION OF STATE HIGHWAY AND TRANSPORTATION OFFICIALS (AASHTO) LRFD BRIDGE SPECIFICATIONS (SECOND EDITION, 1998) AND APPLICABLE INTERIMS THROUGH 2003.
   B. FDOT ROADWAY AND TRAFFIC DESIGN STANDARDS, JANUARY 2004 EDITION.
   C. FDOT STRUCTURES DESIGN GUIDELINES FOR LOAD AND RESISTANCE FACTOR DESIGN, JANUARY 1, 2003.
   D. FDOT STRUCTURES DETAILING MANUAL, JANUARY 1, 1999.

# FLORIDA DEPARTMENT OF TRANSPORTATION
# BRIDGE MANAGEMENT SYSTEM
# BRIDGE INSPECTION REPORT

Bridge No.: 124116
Inspection Date: 11/15/07

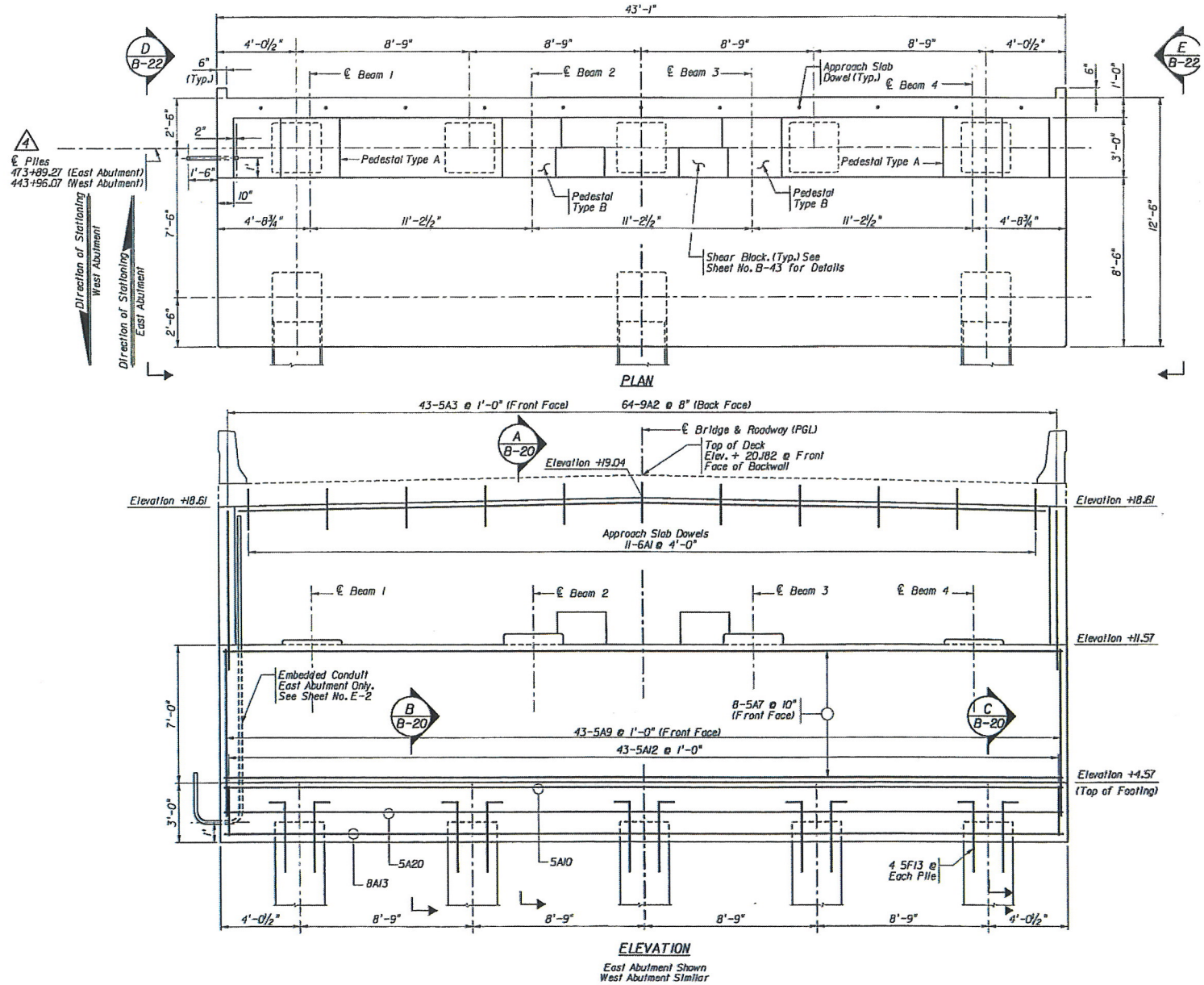


TYPICAL ABUTMENT: PLAN & ELEVATION

# FLORIDA DEPARTMENT OF TRANSPORTATION
# BRIDGE MANAGEMENT SYSTEM
# BRIDGE INSPECTION REPORT

Bridge No.: 124116
Inspection Date: 11/15/07

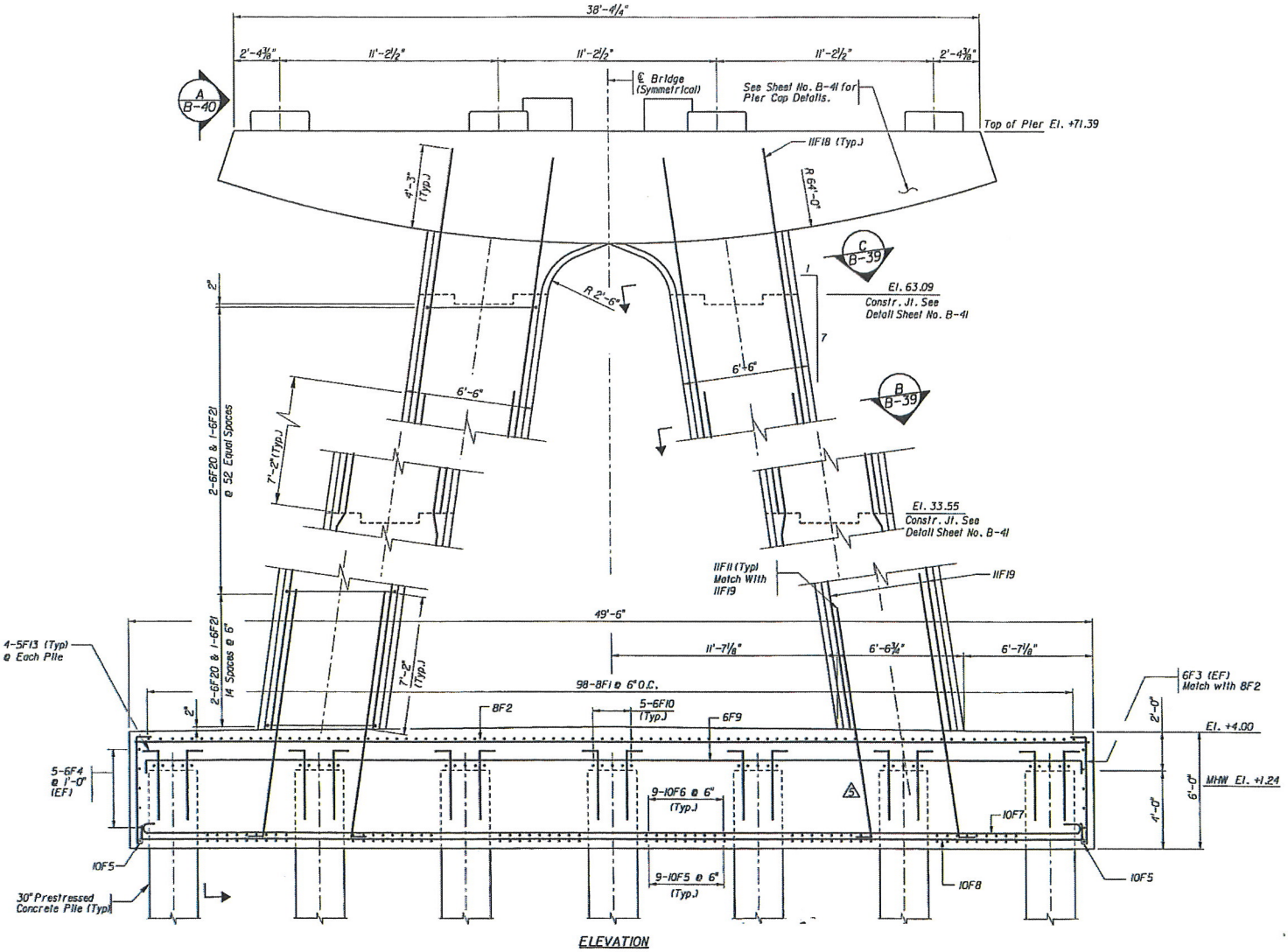


TYPICAL INTERMEDIATE PIER ELEVATION

# FLORIDA DEPARTMENT OF TRANSPORTATION
# BRIDGE MANAGEMENT SYSTEM
# BRIDGE INSPECTION REPORT

Bridge No.: 124116
Inspection Date: 11/15/07

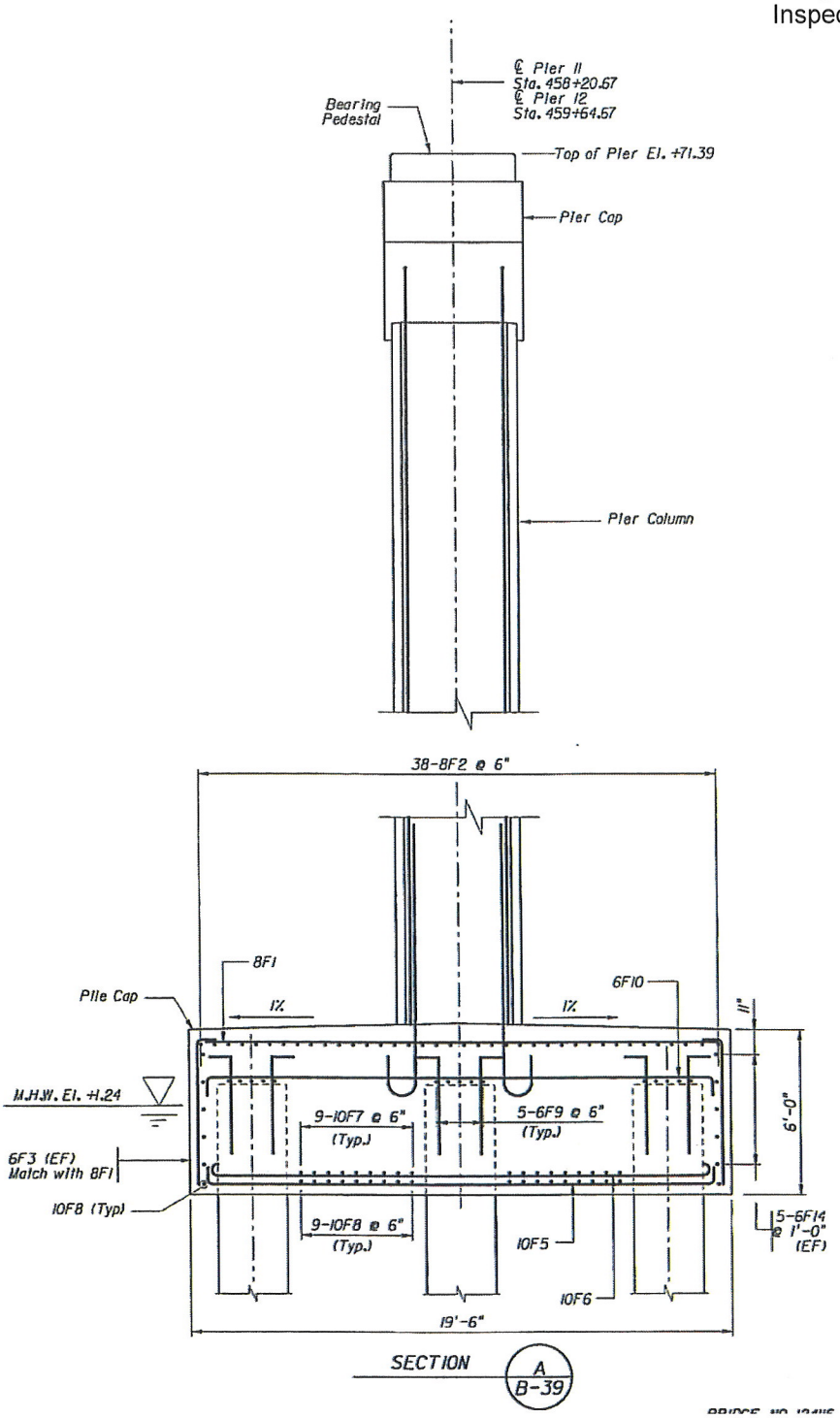


TYPICAL INTERMEDIATE PIER SECTION

# FLORIDA DEPARTMENT OF TRANSPORTATION
# BRIDGE MANAGEMENT SYSTEM
# BRIDGE INSPECTION REPORT

Bridge No.: 124116
Inspection Date: 11/15/07

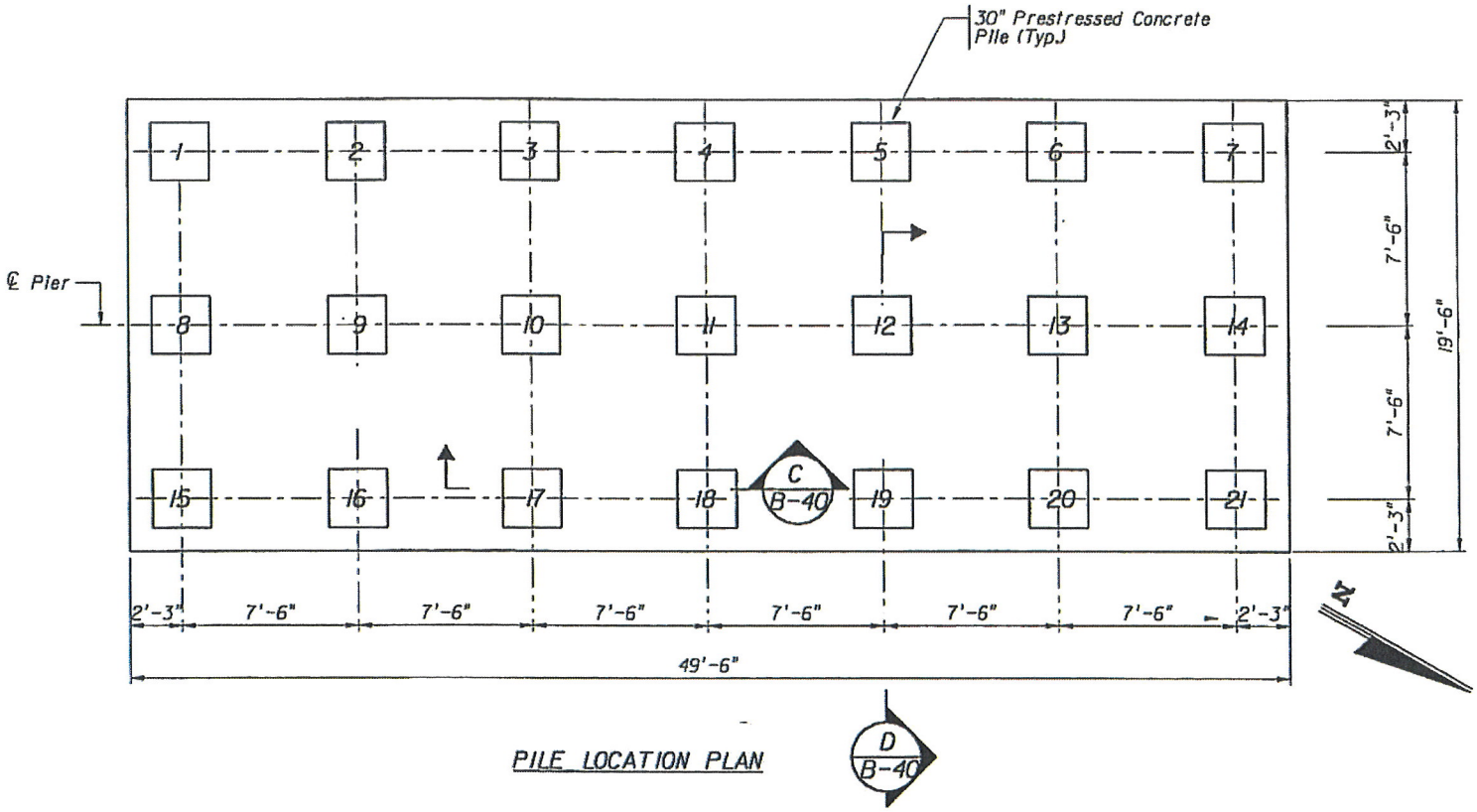


TYPICAL INTERMEDIATE PIER PILE LOCATION PLAN

# FLORIDA DEPARTMENT OF TRANSPORTATION
# BRIDGE MANAGEMENT SYSTEM
# BRIDGE INSPECTION REPORT

Bridge No.: 124116
Inspection Date: 11/15/07

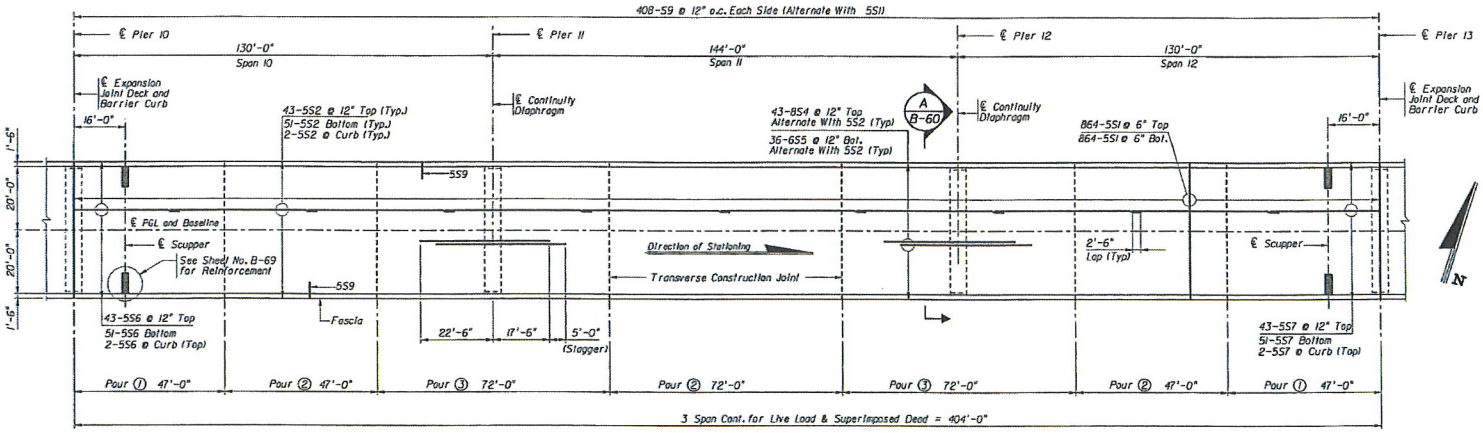


DECK PLAN - CENTER UNIT (1 UNIT REQUIRED)

SUPERSTRUCTURE PLAN

# FLORIDA DEPARTMENT OF TRANSPORTATION
# BRIDGE MANAGEMENT SYSTEM
# BRIDGE INSPECTION REPORT

Bridge No.: 124116
Inspection Date: 11/15/07

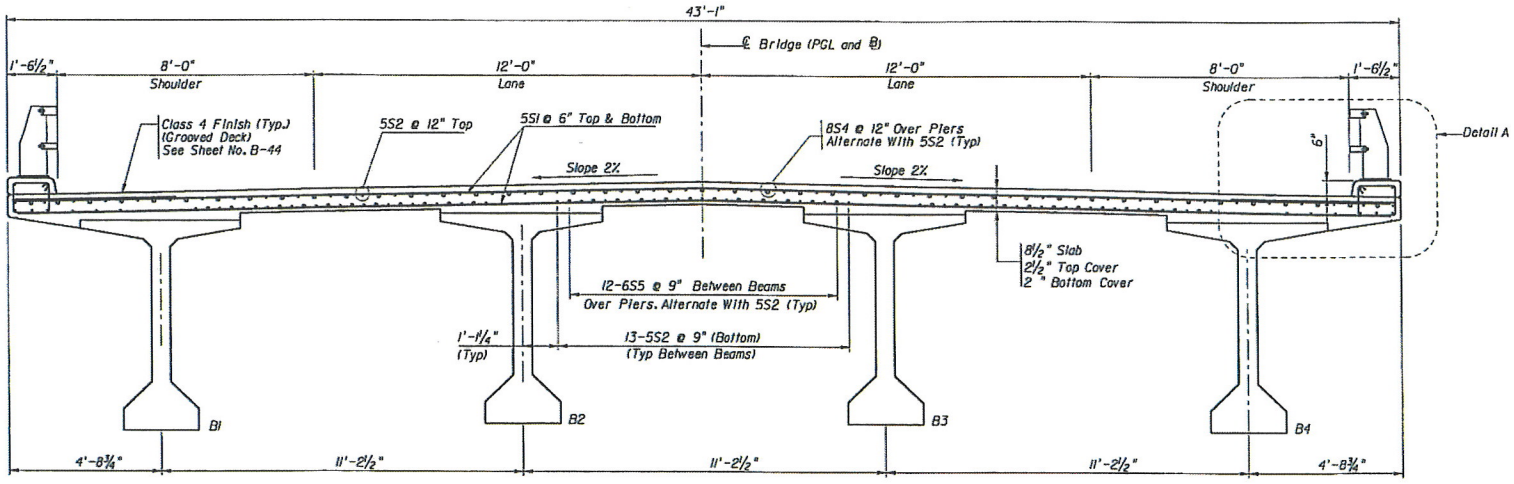


SUPERSTRUCTURE SECTION

# FLORIDA DEPARTMENT OF TRANSPORTATION
# BRIDGE MANAGEMENT SYSTEM
# BRIDGE INSPECTION REPORT

Bridge No.: 124116
Inspection Date: 11/15/07

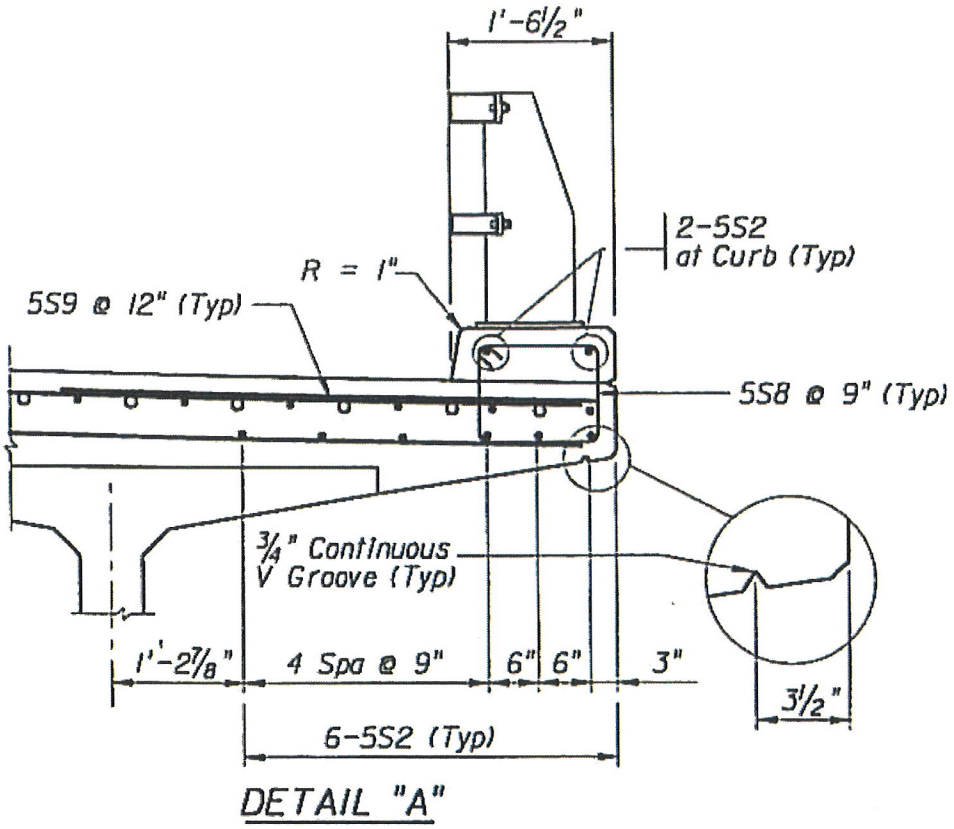


DETAIL "A"

SUPERSTRUCTURE DETAILS

# FLORIDA DEPARTMENT OF TRANSPORTATION
# BRIDGE MANAGEMENT SYSTEM
# BRIDGE INSPECTION REPORT

Bridge No.: 124116
Inspection Date: 11/15/07

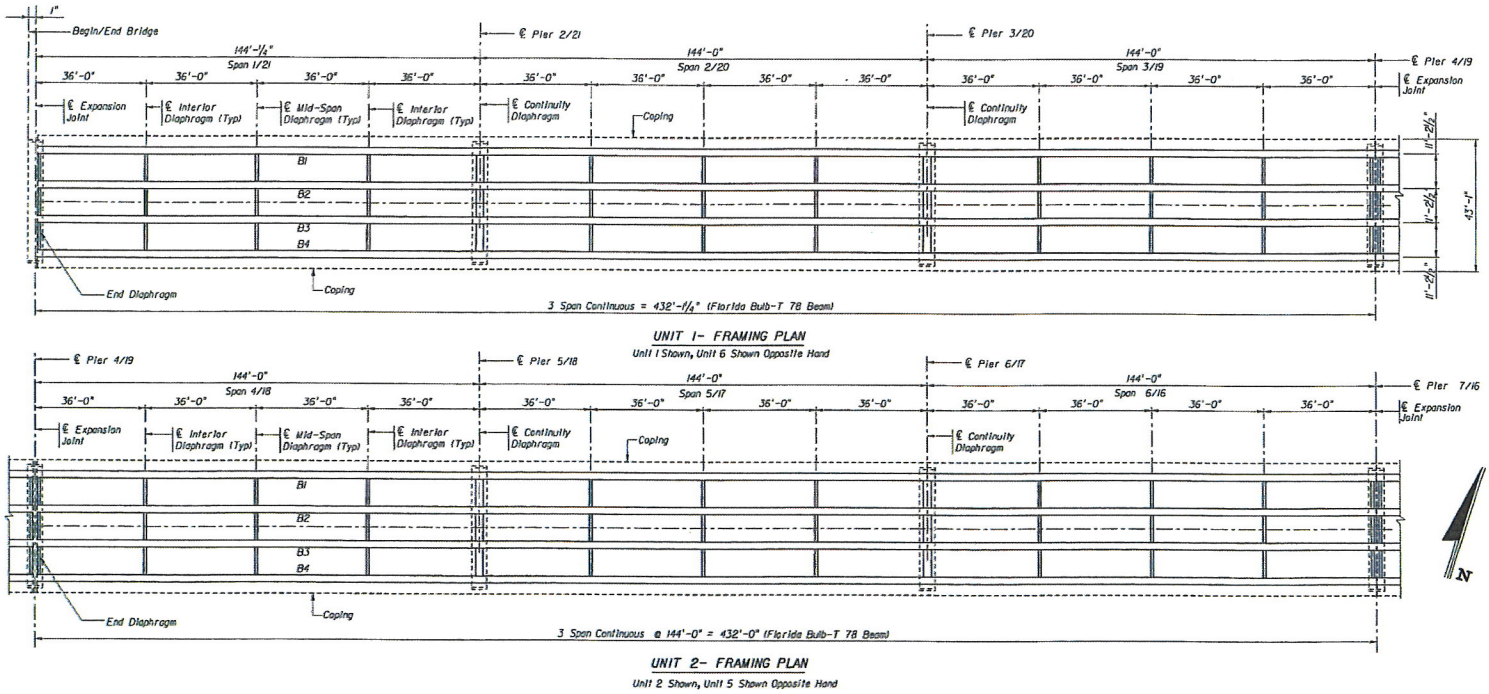


PARTIAL FRAMING PLAN (1 OF 2)

# FLORIDA DEPARTMENT OF TRANSPORTATION
# BRIDGE MANAGEMENT SYSTEM
# BRIDGE INSPECTION REPORT

Bridge No.: 124116
Inspection Date: 11/15/07

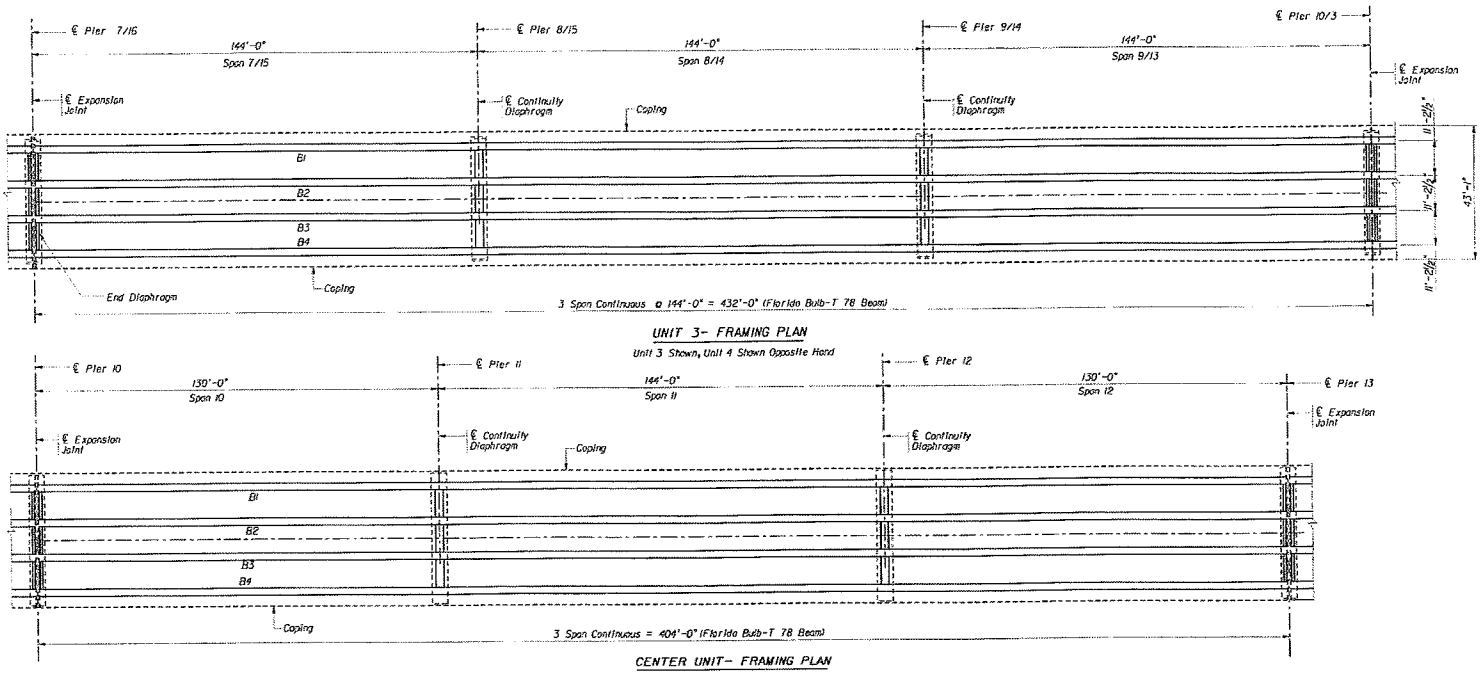


PARTIAL FRAMING PLAN (2 OF 2)

# FLORIDA DEPARTMENT OF TRANSPORTATION
# BRIDGE MANAGEMENT SYSTEM
# BRIDGE INSPECTION REPORT

Bridge No.: 124116
Inspection Date: 11/15/07

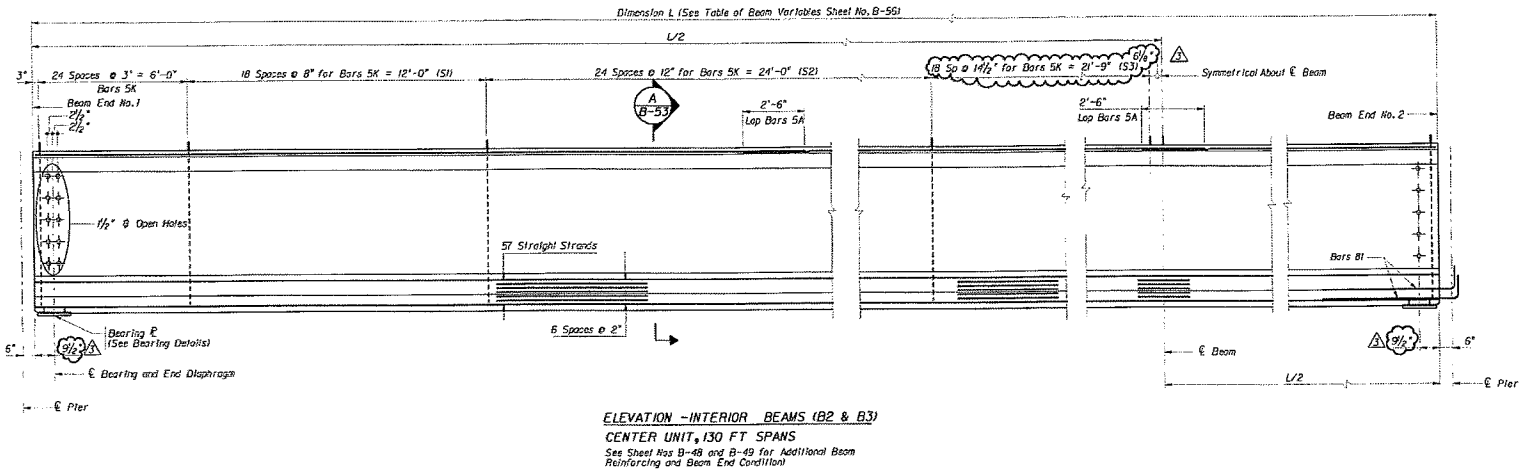


ELEVATION - INTERIOR BEAMS (B2 & B3)
CENTER UNIT, 130 FT SPANS
See Sheet Nos B-48 and B-49 for Additional Beam Reinforcing and Beam End Condition

TYPICAL INTERIOR BEAM ELEVATION

# FLORIDA DEPARTMENT OF TRANSPORTATION
# BRIDGE MANAGEMENT SYSTEM
# BRIDGE INSPECTION REPORT

Bridge No.: 124116
Inspection Date: 11/15/07

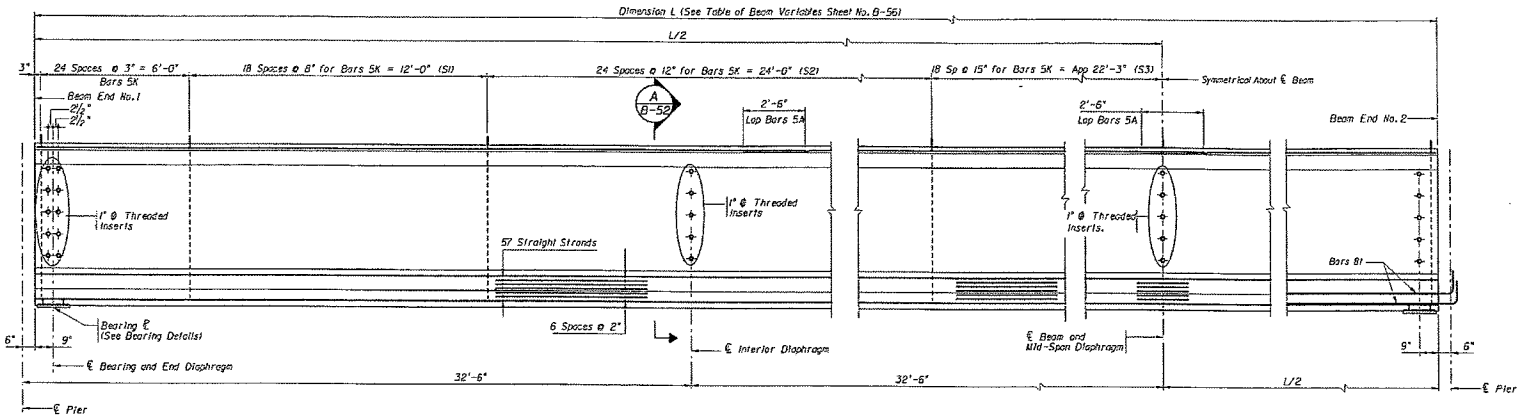


ELEVATION -EXTERIOR BEAMS (B1 & B4)
CENTER UNIT, 130 FT SPANS
See Sheet Nos B-48 and B-49 for Additional Beam Reinforcing and Beam End Condition)

TYPICAL EXTERIOR BEAM ELEVATION

# FLORIDA DEPARTMENT OF TRANSPORTATION
# BRIDGE MANAGEMENT SYSTEM
# BRIDGE INSPECTION REPORT

Bridge No.: 124116
Inspection Date: 11/15/07

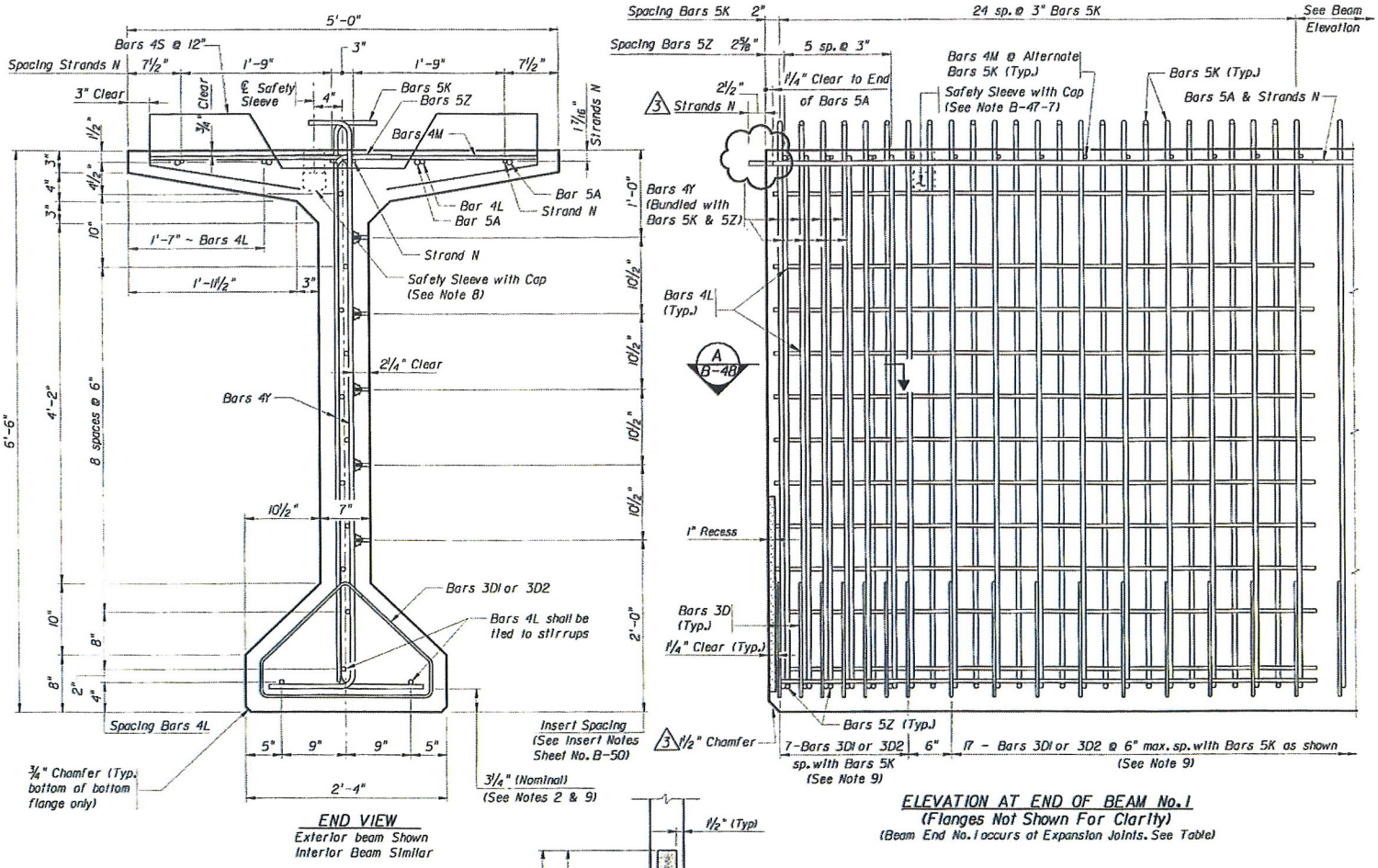


NOTES:

Work this sheet with the following drawings:
Sheet No. B-47 to B-57 typical beam details and notes

See Table of Beam Variables, Sheet No. B-56.

See notes on Sheet No. B-47.

BEAM DETAILS (1 OF 2)

# FLORIDA DEPARTMENT OF TRANSPORTATION
# BRIDGE MANAGEMENT SYSTEM
# BRIDGE INSPECTION REPORT

Bridge No.: 124116
Inspection Date: 11/15/07

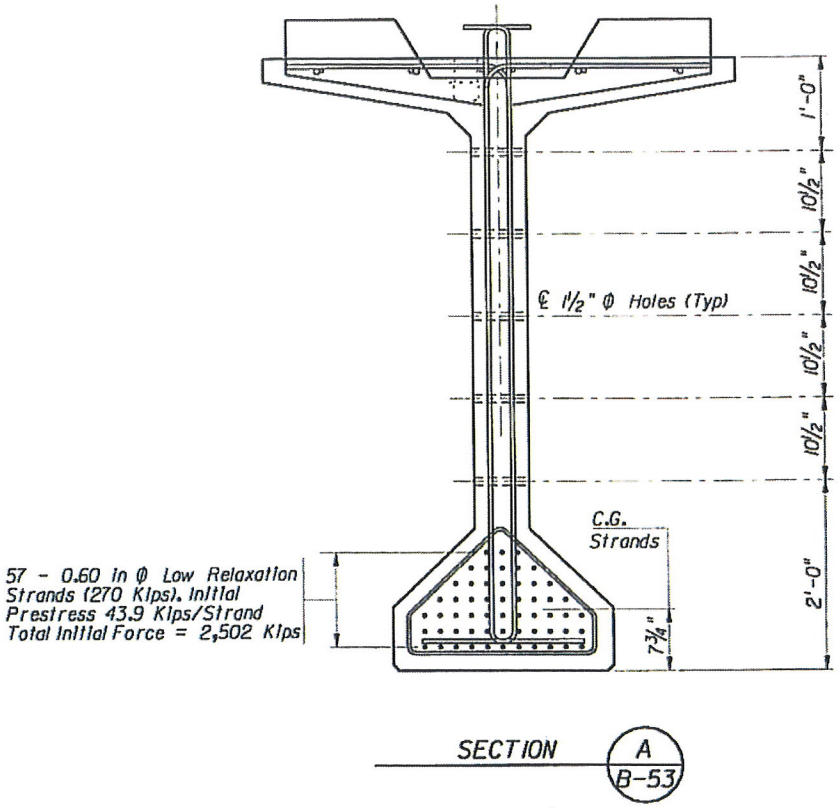


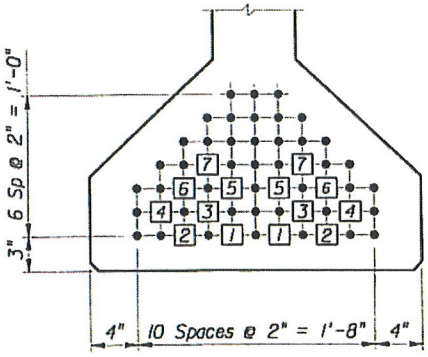


## STRAND PATTERN

- • No Debonding
- [1] Debonded from End of Beam to 45'-0"
- [2] Debonded from End of Beam to 30'-0"
- [3] Debonded from End of Beam to 25'-0"
- [4] Debonded from End of Beam to 20'-0"
- [5] Debonded from End of Beam to 15'-0"
- [6] Debonded from End of Beam to 10'-0"
- [7] Debonded from End of Beam to 5'-0"

BEAM DETAILS (2 OF 2)

Bridge No.: 124116
Inspection Date: 11/15/07

## BEAM NOTES

1. All bar dimensions are out-to-out.

2. Place one (1) Bar 5K or 4Z at each location as detailed alternating the direction of the ends for each bar (see "ELEVATION AT END OF BEAM").

3. Bars 4L shall be bent prior to the beam leaving the prestressing yard. Bars 4L shall be bent parallel to the ends of the beams.

4. Caution should be used with Bars 4L in the ends of exterior beams to assure the bent portion of the bar is properly oriented so that the bar will be embedded in the diaphragm concrete.

5. Strands N shall be either ASTM A416, Grade 270, seven-wire strands 3/8" Φ or larger, stressed to 10,000 lbs. each.

6. Unless otherwise noted, the minimum concrete cover for reinforcing steel shall be 2".

7. Install Safety Sleeves 1'-10" from ends of beam and spaced on 8'-0" (Max.) centers. Shift Bars 5K locally to allow placement. Safety Sleeves shall be 2 1/2" NPS x 5" Sch. 40 PVC Pipe with Cap. Holes shall be free of debris and water prior to casting deck.

8. Placement of Bars 3D1, 3D2, 4M1 and 4M2 correspond to END 1 and END 2 respectively, as shown in the beam "ELEVATION". Placement for bars 3D3 and 4M3 corresponds to center of span For Bars 3D1 and 3D2, Dimension B and the overall length shall be adjusted to fit the width of the bottom flange measured parallel to the skew. Fan Bars 4M1 and 4M2 as needed to maintain minimum clearance (1 1/2") between the bars at the transition to Bars 4M3 and field cut to length to maintain minimum cover.

9. Bars 5K and 5Z shall be placed and tied to the fully bonded strands in the bottom row (See Beam elevations for bars 5K spacing).

10. See Sheet Nos. B-48 Thru B-57 for additional beam details.

# TOPIC I

# CHANNEL AND SCOUR INFORMATION

# FLORIDA DEPARTMENT OF TRANSPORTATION
# BRIDGE MANAGEMENT SYSTEM
# BRIDGE INSPECTION REPORT

Bridge No.: 124116
Inspection Date: 11/15/07

Channel Looking West

Channel Looking East

**FLORIDA DEPARTMENT OF TRANSPORTATION BRIDGE MANAGEMENT SYSTEM**
**Bridge Profile Report**

**REPORT ID: INVT016**
**Structure #: 124116**

**DATE PRINTED:** 12/14/2007



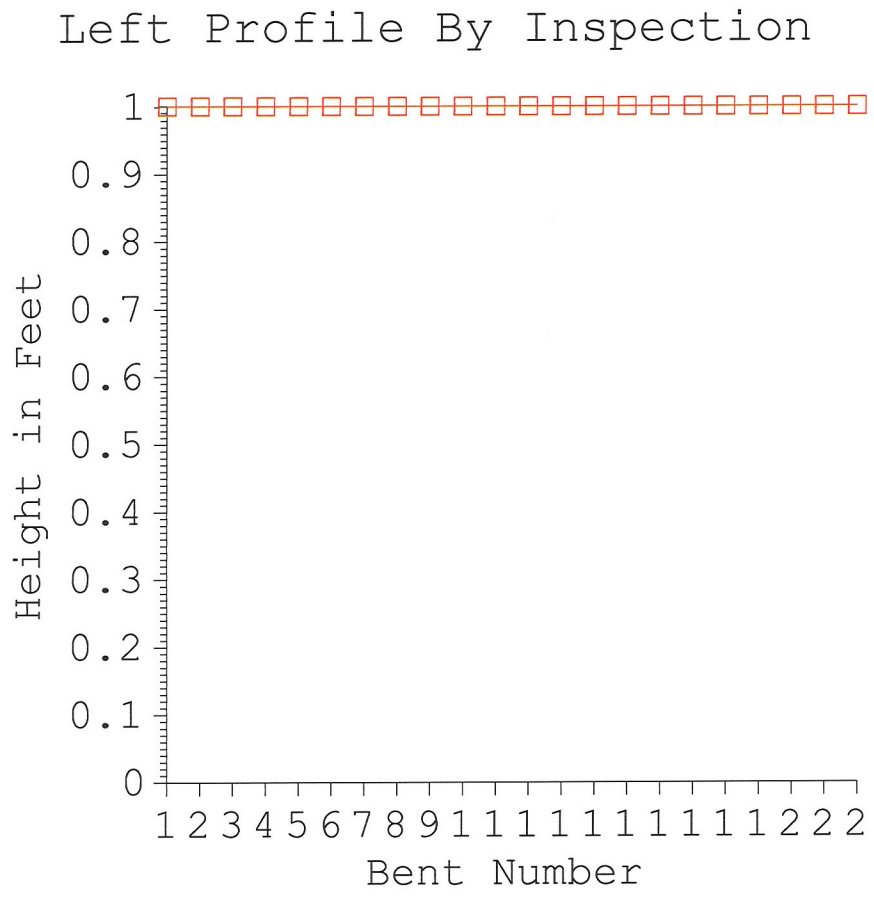


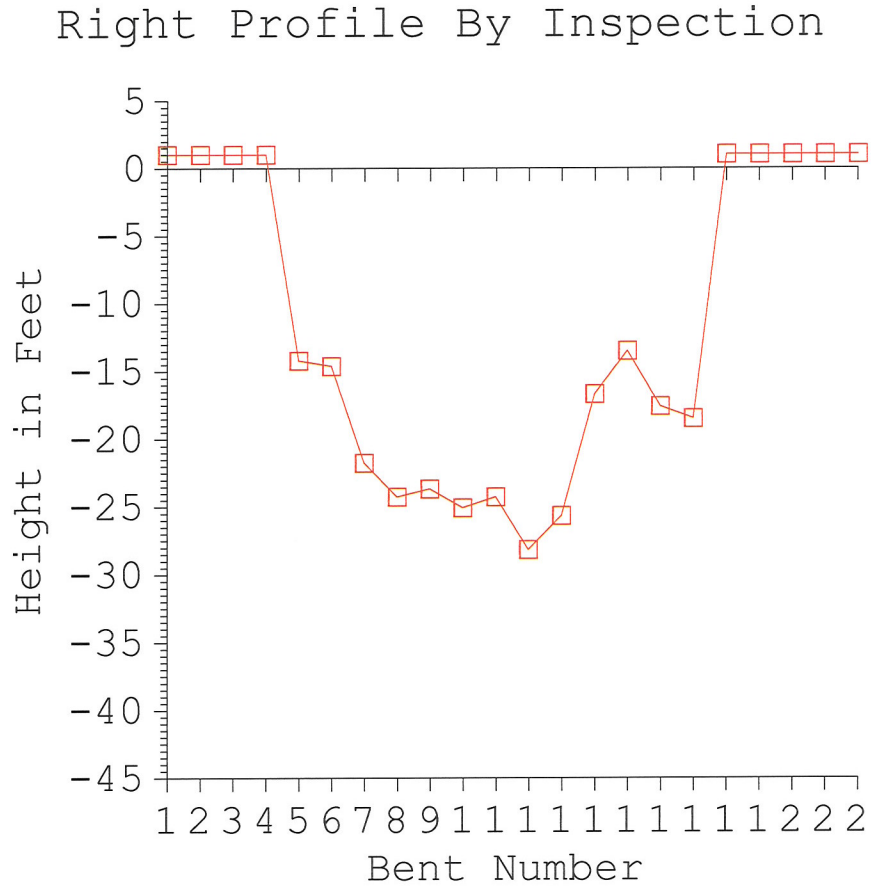


I2

REPORT ID: INVT016

DATE PRINTED: 12/14/2007

Structure #: 124116



## Profile Data - Numerical Summary

**Inspection Date and Key:** 11/15/2007 GPFO

(All Heights Are In Feet)

| Bent # | Left Height | Right Height |
|---|---|---|
| 1 | -1 | -1 |
| 2 | -1 | -1 |
| 3 | -1 | -1 |
| 4 | -1 | -1 |
| 5 | -1 | 14.2 |
| 6 | -1 | 14.6 |
| 7 | -1 | 21.8 |
| 8 | -1 | 24.3 |
| 9 | -1 | 23.7 |
| 10 | -1 | 25.1 |
| 11 | -1 | 24.3 |
| 12 | -1 | 28.2 |
| 13 | -1 | 25.7 |
| 14 | -1 | 16.7 |
| 15 | -1 | 13.5 |
| 16 | -1 | 17.6 |
| 17 | -1 | 18.5 |
| 18 | -1 | -1 |
| 19 | -1 | -1 |
| 20 | -1 | -1 |
| 21 | -1 | -1 |
| 22 | -1 | -1 |

**Air Temp:**

**Profile Notes:**

Measurements referenced to top of pier 4 footer.
Waterline: 3.0ft

No left side measurements taken due to ongoing demolition.
Bents 1 - 4 and 18 - 22 are on dryland.

73

# SECTION III

# COMMUNICATIONS

## III. COMMUNICATIONS

BRIDGE NUMBER: 124116
BRIDGE NAME: STRUCTURE A SANIBEL CAUSEWAY

| DOCUMENT LOG | |
|---|---|
| Type of Communication | Date Published |
| | |
| | |
| | |
| | |
| | |
| | |
| | |
| | |
| | |
| | |
| | |
| | |
| | |
| | |
| | |
| | |
| | |
| | |
| | |
| | |
| | |
| | |