Timeline for Telecommunications – Cell Tower – Verizon

July 15, 1997 - RESOLUTION 97-118

Summer law clerk Scott Newsom used overhead slides to illustrate the latest telecommunications technology' traditional earth stations (currently covered under the City's ordinance), over-the-air reception devices (antennas and dish antennas) and personal wireless service facilities. He explained that the 1996 Telecommunications Act gives local governments some control over the telecommunications devices that can be used, and the draft ordinance addresses the zoning changes needed to regulate the new devices in an attempt to maintain the aesthetics and natural beauty of the island. Discussion ensued, with Mr. Newsom explaining that the City can construct its own towers as long as long as demands for service are met. Upon Council agreement that staff should proceed with taking the ordinance through the normal public hearing process, Mayor Davison and City Attorney Pritt noted the need to pass a resolution notifying the public of the City's intent to propose zoning changes.
City Manager Price read the following title into the record:
A RESOLUTION DECLARING THE CITY'S INTENTION TO PROPOSE CHANGES IN THE SANIBEL LAND DEVELOPMENT CODE PERTAINING TO TELECOMMUNICATIONS, DECLARING THAT SUCH ZONING IS IN PROGRESS, DIRECTING THE CITY MANAGER AND CITY ATTORNEY TO CAUSE TO BE
PUBLISHED A NOTICE OF PENDENCY OF AN ORDINANCE PERT AINING TO TELECOMMUNICATIONS DEVICES; REGULATION OF EARTH STATIONS, OVER-THE-AIR RECEPTION DEVICES, PERSONAL WIRELESS SERVICE FACILITIES AND RELATED MATTERS, DIRECTING THE CITY MANAGER AND CITY ATTORNEY TO INSTITUTE PROCEEDINGS BEFORE THE PLANNING COMMISSION APPROPRIATE FOR ITS REVIEW OF PROPOSED CHAMGES, AND PROVIDING AN EFFECTIVE DATE - Adopted

November 18, 1997

Accept *Planning Commission Resolution* No. 97-58, (Adopted August 12, 1997) Telecommunication Towers - Resolution and PC and CC minutes attached

December 16, 1997 - RESOLUTION 97-242

Approval of A RESOLUTION REVIEWING PROPOSALS FOR PROFESSIONAL CONSULTING SERVICES FOR TELECOMMUNICATIONS MATTERS; MAKING A DETERMINATION AS TO THE TOP-RANKED FIRM FOR SUCH SERVICES; AUTHORIZING THE CITY MANAGER AND CITY ATTORNEY TO ATTEMPT TO NEGOTIATE AN AGREEMENT WITH SUCH FIRM; AND PROVIDING AN EFFECTIVE DATE. - Adopted

January 20, 1998 – RESOLUTION 98-17

RESOLUTION APPROVING A CONTRACT BETWEEN KURTIS & ASSOCIATES, P.C., AND THE CITY OF SANIBEL FOR CONSULTING SERVICES CONCERNING TELECOMMUNICATIONS MATTERS; AUTHORIZING THE CITY MANAGER AND CITY ATTORNEY TO ENTER INTO THE AGREEMENT; AND PROVIDING AN EFFECTIVE DATE. – Adopted and Approved Agreement

January 22, 1998 – Executed - Agreement for Professional Consulting Services – Kurtis & Assoc. P.C.

Agreement Attached

September 1, 1998 – RESOLUTION 98-167

A RESOLUTION APPROVING ADDENDUM 1 TO THE AGREEMENT FOR PROFESSIONAL CONSULTING SERVICES BETWEEN THE CITY OF SANIBEL AND KURTIS & ASSOCIATES, P.C. CONCERNING TELECOMMUNICATIONS MATTERS; AND PROVIDING AN EFFECTIVE DATE. - Adopted

Addendum to Kurtis Agreement Attached

November 24, 1998 - Planning Commission RESOLUTION 98-58

Whereas the City of Sanibel has submitted an application for consideration of an amendment to the Land Development code which proposes to establish regulations for telecommunications devices. - Adopted

December 1, 1998 – RESOLUTION 98-250

A RESOLUTION ELECTING TO CONDUCT A PUBLIC HEARING ON A PROPOSED ORDINANCE RELATING TO TELECOMMUNICATIONS PRIOR TO 5:00 P.M.; ESTABLISHING A DATE AND TIME FOR THE FIRST READING AND PUBLIC HEARING; AND PROVIDING AN EFFECTIVE DATE. – Adopted

January 5, 1999 – ORDINANCE – First Reading

Item 7: First Reading and Public Hearing of AN ORDINANCE RELATING TO TELECOMMUNICATIONS; AMENDING SUBSECTION I.B.2.c. OF THE LAND DEVELOPMENT CODE OF THE CITY OF SANIBEL TO DELETE THIS DEFINITION OF EARTH STATION; AMENDING SUBSECTION LC.l.c. BY ADDING AN OVERLAY DISTRICT MAP ESTABLISHING PERMITTED USE DISTRICTS FOR TELECOMMUNICATIONS DEVICES; AMENDING SECTION I.E.I0., HEIGHT EXCEPTIONS, OF THE LAND DEVELOPMENT CODE; AMENDING SECTION LE.32 TO REFLECT CHANGES MADE NECESSARY BY THE TELECOMMUNICATIONS ACT OF 1996; PROVIDING REGULATIONS ON TELECOMMUNICATIONS DEVICES; AMENDING SECTION IILC.2~ TO PROVIDE VARIANCE STANDARDS FOR TELECOMMUNICATIONS DEVICES; AMENDING SECTION VIl.B.2. TO, VIl.B.3., VIl.B.6. AND VIl.D.3. TO ESTABLISH APPLICATION FEES FOR TELECOMMUNICATIONS DEVICES; PROVIDING FOR CODIFICATION; PROVIDING FOR CONFLICT AND SEVERANCE; AND PROVIDING AN EFFECTIVE DATE.

Mayor Janes declared a First Reading, Second Reading to be January 19, 1999 at 10:00 a.m.

January 19, 1999 – ORDINANCE – Second Reading

Item 9: Second Reading and Public Hearing of AN ORDINANCE RELATING TO TELECOMMUNICATIONS; AMENDING SUBSECTION I.B.2.c. OF THE LAND DEVELOPMENT CODE OF THE CITY OF SANIBEL TO DELETE THIS DEFINITION OF EARTH STATION; AMENDING SUBSECTION LC.l.c. BY ADDING AN OVERLAY DISTRICT MAP ESTABLISHING PERMITTED USE DISTRICTS FOR TELECOMMUNICATIONS DEVICES; AMENDING SECTION I.E.I0., HEIGHT EXCEPTIONS, OF THE LAND DEVELOPMENT CODE; AMENDING SECTION LE.32 TO REFLECT CHANGES MADE NECESSARY BY THE TELECOMMUNICATIONS ACT OF 1996; PROVIDING REGULATIONS ON TELECOMMUNICATIONS DEVICES; AMENDING SECTION IILC.2~ TO PROVIDE VARIANCE STANDARDS FOR TELECOMMUNICATIONS DEVICES; AMENDING SECTION VIl.B.2. TO,

VII.B.3., VII.B.6. AND VII.D.3. TO ESTABLISH APPLICATION FEES FOR TELECOMMUNICATIONS DEVICES; PROVIDING FOR CODIFICATION; PROVIDING FOR CONFLICT AND SEVERANCE; AND PROVIDING AN EFFECTIVE DATE.

Mayor Janes Scheduled a continued reading for February 2, 1999 at 10:00 a.m.

January 19, 1999 – RESOLUTION 99-23

RESOLUTION AUTHORIZING THE CITY MANAGER TO PREPARE AND DISTRIBUTE A REQUEST FOR PROPOSAL SOLICITING PROPOSALS FOR THE CONSTRUCTION OF TELECOMMUNICATION TOWERS ON CITY-OWNED PROPERTY, AND PROVIDING AN EFFECTIVE DATE. - Adopted

February 2, 1999 – Continued Reading of ORDINANCE
Item 6: Continued Reading and Public Hearing of AN ORDINANCE RELATING TO TELECOMMUNICATIONS; AMENDING SUBSECTION I.B.2.c. OF THE LAND DEVELOPMENT CODE OF THE CITY OF SANIBEL TO DELETE THIS DEFINITION OF EARTH STATION; AMENDING SUBSECTION LC.l.c. BY ADDING AN OVERLAY DISTRICT MAP ESTABLISHING PERMITTED USE DISTRICTS FOR TELECOMMUNICATIONS DEVICES; AMENDING SECTION I.E.I0., HEIGHT EXCEPTIONS, OF THE LAND DEVELOPMENT CODE; AMENDING SECTION LE.32 TO REFLECT CHANGES MADE NECESSARY BY THE TELECOMMUNICATIONS ACT OF 1996; PROVIDING REGULATIONS ON TELECOMMUNICATIONS DEVICES; AMENDING SECTION IILC.2~ TO PROVIDE VARIANCE STANDARDS FOR TELECOMMUNICATIONS DEVICES; AMENDING SECTION VII.B.2. TO, VII.B.3., VII.B.6. AND VII.D.3. TO ESTABLISH APPLICATION FEES FOR TELECOMMUNICATIONS DEVICES; PROVIDING FOR CODIFICATION; PROVIDING FOR CONFLICT AND SEVERANCE; AND PROVIDING AN EFFECTIVE DATE.

Mayor Janes declared a reading and continued the reading to March 2, 1999 at 10:00 a.m

March 2, 1999 – Continued Reading of ORDINANCE

Item 5: Continued Reading and Public Hearing of AN ORDINANCE RELATING TO TELECOMMUNICATIONS; AMENDING SUBSECTION I.B.2.c. OF THE LAND DEVELOPMENT CODE OF THE CITY OF SANIBEL TO DELETE THIS DEFINITION OF EARTH STATION; AMENDING SUBSECTION LC.l.c. BY ADDING AN OVERLAY DISTRICT MAP ESTABLISHING PERMITTED USE DISTRICTS FOR TELECOMMUNICATIONS DEVICES; AMENDING SECTION I.E.I0., HEIGHT EXCEPTIONS, OF THE LAND DEVELOPMENT CODE; AMENDING SECTION LE.32 TO REFLECT CHANGES MADE NECESSARY BY THE TELECOMMUNICATIONS ACT OF 1996; PROVIDING REGULATIONS ON TELECOMMUNICATIONS DEVICES; AMENDING SECTION IILC.2~ 'TO PROVIDE VARIANCE STANDARDS FOR TELECOMMUNICATIONS DEVICES; AMENDING SECTION VII.B.2. TO, VII.B.3., VII.B.6. AND VII.D.3. TO ESTABLISH APPLICATION FEES FOR TELECOMMUNICATIONS DEVICES; PROVIDING FOR CODIFICATION; PROVIDING FOR CONFLICT AND SEVERANCE; AND PROVIDING AN EFFECTIVE DATE.

Mayor Janes declared a reading and scheduled another reading for April 6, 1999 at 10:00 a.m.

April 6, 1999 – Continued Reading of ORDINANCE

Item 10: Continued Reading and Public Hearing of AN ORDINANCE RELATING TO TELECOMMUNICATIONS; AMENDING SUBSECTION I.B.2.c. OF THE LAND

DEVELOPMENT CODE OF THE CITY OF SANIBEL TO DELETE THIS DEFINITION OF EARTH STATION; AMENDING SUBSECTION LC.l.c. BY ADDING AN OVERLAY DISTRICT MAP ESTABLISHING PERMITTED USE DISTRICTS FOR TELECOMMUNICATIONS DEVICES; AMENDING SECTION I.E.I0., HEIGHT EXCEPTIONS, OF THE LAND DEVELOPMENT CODE; AMENDING SECTION LE.32 TO REFLECT CHANGES MADE NECESSARY BY THE TELECOMMUNICATIONS ACT OF 1996; PROVIDING REGULATIONS ON TELECOMMUNICATIONS DEVICES; AMENDING SECTION IILC.2~ TO PROVIDE VARIANCE STANDARDS FOR TELECOMMUNICATIONS DEVICES; AMENDING SECTION VII.B.2. TO, VII.B.3., VII.B.6. AND VII.D.3. TO ESTABLISH APPLICATION FEES FOR TELECOMMUNICATIONS DEVICES; PROVIDING FOR CODIFICATION; PROVIDING FOR CONFLICT AND SEVERANCE; AND PROVIDING AN EFFECTIVE DATE.

Council voted to calling for a second opinion and a 180 day moratorium.

April 6, 1999 – RESOLUTION 99-71

RESOLUTION PERTAINING TO TELECOMMUNICATIONS; DIRECTING THE CITY MANAGER FORTHWITH TO PREPARE AND SUBMIT FOR CONSIDERATION AN ORDINANCE IMPLEMENTING A MORATORIUM ON PROCESSING OR APPROVAL OF APPLICATIONS FOR CERTAIN TELECOMMUNICATIONS DEVICES AND FACILITIES; DECLARING THAT A MORATORIUM ON SAME IS PENDING AND IS ZONING IN PROGRESS; DIRECTING THE CITY MANAGER TO PUBLISH AND POST A NOTICE OF PENDENCY; REQUESTING THE PLANNING COMMISSION TO EXPEDITE REVIEW AND RECOMMENDATION OF SUCH ORDINANCE; AND PROVIDING AN EFFECTIVE DATE. - Adopted

April 6, 1999 – RESOLUTION 99-72

RESOLUTION DIRECTING THE CITY MANAGER TO SOLICIT PROPOSALS FOR PROFESSIONAL CONSULTING SERVICES FOR ASSISTANCE IN THE DEVELOPMENT OF A MASTER PLAN FOR TELECOMMUNICATION FACILITIES OR DEVICES; PROVIDING A SCOPE OF SERVICES; PROVIDING CERTAIN QUALIFICATIONS; AND PROVIDING AN EFFECTIVE DATE. - Adopted

April 20, 1999 – CC Discussion – RFP for a second opinion on telecommunications has been sent to an appropriate mailing list and published in NewsPress. - Minutes from CC meeting attached

April 27, 1999 – PC Resolution No. 99-17

MORATORIUM ORDINANCE ON TELECOMMUNICATION DEVICES AND FACILITIES

May 4, 1999 – Planning Commission Report at CC Meeting attached

May 18, 1999 – ORDINANCE First Reading

Item 7: First Reading and Public Hearing of AN ORDINANCE PERTAINING TO TELECOMMUNICATIONS; DECLARING A MORATORIUM ON PROCESSING OR APPROVAL OF APPUCATIONS FOR CERTAIN TELECOMMUNICATIONS DEVICES AND FACILITIES; PROVIDING FOR CONFLICT AND SEVERANCE; AND PROVIDING AN EFFECTIVE DATE. (Submitted by the City of Sanibel)

Mayor Janes declared a First Reading and scheduled the Second Reading for June 1, 1999 at 10:00 a.m.

June 1, 1999 – RESOLUTION 99-104

RESOLUTION PERTAINING TO TELECOMMUNICATIONS; RANKING PROPOSALS RECEIVED FROM FIRMS SEEKING TO PROVIDE TELECOMMUNICATIONS PLANNING CONSULTING SERVICES; AUTHORIZING THE MAYOR TO NEGOTIATE A CONTRACT WITH THE TOP-RANKED FIRM; AND PROVIDING AN EFFECTIVE DATE. - Adopted

June 1, 1999 – Second Reading and Public Hearing – ORDINANCE 99-02

Item 6: Second Reading and Public Hearing of an ORDINANCE PERTAINING TO TELECOMMUNICATIONS; DECLARING A MORATORIUM ON PROCESSING OR APPROVAL OF APPLICATIONS FOR CERTAIN TELECOMMUNICATIONS DEVICES AND FACILITIES; PROVIDING FOR CONFLICT AND SEVERANCE; AND PROVIDING AN EFFECTIVE DATE.

Ordinance was adopted by a vote of 3-2, with Councilmembers Janes and Theiss dissenting.

June 15, 1999 – RESOLUTION 99-118

RESOLUTION APPROVING A CONTRACT WITH THE TOP-RANKED FIRM FOR TELECOMMUNICATIONS PLANNING CONSULTING SERVICES; AND PROVIDING AN EFFECTIVE DATE. - Adopted

August 3, 1999 – RESOLUTION 99-147 – LCEC Agreement

RESOLUTION APPROVING AN EASEMENT TO LEE COUNTY ELECTRIC COOPERATIVE, INC.; AUTHORIZING THE MAYOR TO EXECUTE SAME; AND PROVIDING AN EFFECTIVE DATE. - Adopted

October 19, 1999 – First Reading - ORDINANCE 99-07

AN ORDINANCE RELATING TO TELECOMMUNICATIONS; AMENDING SUBSECTION I.B.2 .c. OF THE LAND DEVELOPMENT CODE OF THE CITY OF SANIBEL TO DELETE THE DEFINITION OF "EARTH STATION"; AMENDING SUBSECTION I.C.l.c. BY ADDING AN OVERLAY DISTRICT MAP ESTABLISHNG PERMITTED USE DISTRICTS FOR TELECOMMUNICATIONS DEVICES; AMENDING SECTION I.E .IO ., HEIGHT EXCEPTIONS, OF THE LAND DEVELOPMENT CODE; AMENDING SECTION I.E .32. TO REFLECT CHANGES MADE NECESSARY BY THE TELECOMMUNICATIONS ACT OF 1996 ; ADOPTING A WIRELESS TELECOMMl1T'ilCATIONS MASTER PLAN; PROVIDING REGULATIONS ON TELECOMMUNICATIONS DEVICES; AMENDING SECTION ill.C.2. TO PROVIDE VARIANCE STANDARDS FOR TELECOMMUNICATIONS DEVICES; AMENDING SECTIONS VII .B.2., VII .B.3 ., VII.B.6 . AND VII .D .3. TO ESTABLISH APPLICATION FEES FOR TELECOMMUNICATIONS DEVICES; PROVIDING FOR CODIFICATION; -PROVIDING FOR CONFLICT AND SEVERANCE; AND PROVIDING AN EFFECTIVE DATE

Mayor Janes declared a First Reading and scheduled the Second Reading and Public Hearing for November 2, 1999 at 9:30 a.m.

November 2, 1999 – Second Reading - ORDINANCE 99-07

AN ORDINANCE RELATING TO TELECOMMUNICATIONS; AMENDING SUBSECTION I.B.2 .c. OF THE LAND DEVELOPMENT CODE OF THE CITY OF SANIBEL TO DELETE THE DEFINITION OF "EARTH STATION"; AMENDING SUBSECTION I.C.l.c. BY

ADDING AN OVERLAY DISTRICT MAP ESTABLISHNG PERMITTED USE DISTRICTS FOR TELECOMMUNICATIONS DEVICES; AMENDING SECTION I.E .IO ., HEIGHT EXCEPTIONS, OF THE LAND DEVELOPMENT CODE; AMENDING SECTION I.E .32. TO REFLECT CHANGES MADE NECESSARY BY THE TELECOMMUNICATIONS ACT OF 1996 ; ADOPTING A WIRELESS TELECOMMI1T'iICATIONS MASTER PLAN; PROVIDING REGULATIONS ON TELECOMMUNICATIONS DEVICES; AMENDING SECTION iII.C.2. TO PROVIDE VARIANCE STANDARDS FOR TELECOMMUNICATIONS DEVICES; AMENDING SECTIONS VII .B .2., VII .B.3 ., VII.B.6 . AND VII .D .3. TO ESTABLISH APPLICATION FEES FOR TELECOMMUNICATIONS DEVICES; PROVIDING FOR CODIFICATION; -PROVIDING FOR CONFLICT AND SEVERANCE; AND PROVIDING AN EFFECTIVE DATE. - Adopted

January 2, 2001 – First Reading ORDINANCE 01-01

First Reading of AN ORDINANCE OF THE CITY OF SANIBEL, FLORIDA ASSESSING A FEE ON TELECOMMUNICATIONS COMPANIES THAT OCCUPY MUNICIPAL RIGHTS-OF-WAY FOR TELECOMMUNICATIONS FACILITIES; PROVIDING FOR WHEN PAYMENTS ARE DUE; PROVIDING FOR INTEREST; PROVIDING FOR REVIEW OF RECORDS; PROVIDING A SAVINGS CLAUSE; PROVIDING FOR CODIFICATION; PROVIDING FOR CONFLICT AND SEVERANCE; AND PROVIDING AN EFFECTIVE DATE.

Mr. Sealover noted the public hearing would be scheduled for January 16th at 9:30 a.m.

January 16, 2001 – Second Reading ORDINANCE 01-01

Second Reading of AN ORDINANCE OF THE CITY OF SANIBEL, FLORIDA ASSESSING A FEE ON TELECOMMUNICATIONS COMPANIES THAT OCCUPY MUNICIPAL RIGHTS-OF-WAY FOR TELECOMMUNICATIONS FACILITIES; PROVIDING FOR WHEN PAYMENTS ARE DUE; PROVIDING FOR INTEREST; PROVIDING FOR REVIEW OF RECORDS; PROVIDING A SAVINGS CLAUSE; PROVIDING FOR CODIFICATION; PROVIDING FOR CONFLICT AND SEVERANCE; AND PROVIDING AN EFFECTIVE DATE. - Adopted

May 1, 2001 – CC Discussion regarding the proposed Verizon contract to install a communications tower – Minutes Attached

May 15, 2001 – CC Discussion Telecommunications Tower– Minutes Attached

October 2, 2001 – First Reading ORDINANCE 01-13

First Reading of Ordinance No. 01-13 REPEALING THE ASSESSMENT OF FEES ON TELECOMMUNICATIONS COMPANIES THAT OCCUPY MUNICIPAL RIGHTS-OF-WAY FOR TELECOMMUNICATIONS FACILITIES AND PROVIDING AN EFFECTIVE DATE.

Council set public hearing for October 16, 2001 at 9:30 a.m.

October 16, 2001– Second Reading ORDINANCE 01-13

Second Reading of Ordinance No. 01-13 AN ORDINANCE REPEALING ORDINANCE NO. 01-01 REGARDING THE ASSESSMENT OF FEES ON TELECOMMUNICATIONS COMPANIES THAT OCCUPY MUNICIPAL RIGHTS-OF-WAY FOR TELECOMMUNICATIONS FACILITIES AND PROVIDING AN EFFECTIVE DATE. – Adopted

November 20, 2001 - CC Discussion – Letter from Verizon re: Wulfert location – Minutes Attached

FEBRUARY 19, 2002 - Council requested Planning staff to prepare a report regarding all past public hearings on telecommunications tower. Minutes attached

April 11, 2002 – Planning Department Staff Report for April 16, 2002 CC Meeting

April 16, 2002 – CC Discussion - Minutes attached

April 23, 2002 – PC Discussion on Verizon continued to a later date - Minutes attached

June 18, 2002 – Discussion regarding Verizon application – Hearing set for August 7, 2002

August 6, 2002 – CC Discussion – Motion made to authorize the City Manager to obtain counsel for the Verizon hearing – Motion died for the lack of a second – Minutes Attached

August 7, 2002 – Verizon Hearing – Minutes Attached

August 9, 2002 – Continued Verizon Hearing – Minutes Attached

August 20, 2002 – RESOLUTION 02-83

> A RESOLUTION APPROVING THE CONSTRUCTION OF 149 FEET MONOPOLE ABOVE GROUND LEVEL (AGL), TO ATTACH ANTENNAS TO THE MONOPOLE, CONSTRUCT EQUIPMENT SHELTER TO HOUSE THE BASE TRANSCEIVER STATION (BTS), VIA CABLES TO CONNECT THE BTS TO THE ANTENNA AND TO FENCE IN AN AREA 50' X 50' TO CONTAIN THE EQUIPMENT ON THE CITY-OWNED LAND AT THE WULFERT ROAD WASTEWATER TREATMENT PLANT, AT 2222 WULFERT ROAD. THE REQUEST IS BEING PROCESSED UNDER THE PROVISION OF LAND DEVELOPMENT CODE SECTION 78-7, CITY EXEMPTED. THE APPLICATION WAS FILED BY MASTEC NORTH AMERICA, INC., ON BEHALF OF VERIZON WIRELESS PERSONAL COMMUNICATIONS, LP., D.B.A. VERIZON WIRELESS. - Adopted

May 20, 2003 – RESOLUTION 03-042

A RESOLUTION ACKNOWLEDGING THE INTENT OF VERIZON WIRELESS TO SUBMIT A NEW PETITION FOR A 120 FOOT COMMUNICATION TOWER AT THE LCEC SITE, LOCATED AT 5050 SANIBEL-CAPTIVA ROAD, SANIBEL, LEE COUNTY, FLORIDA; AND PROVIDING AN EFFECTIVE DATE – Adopted

September 6, 2003 – First Reading ORDINANCE 03-014

AN ORDINANCE AMENDING THE SANIBEL CODE, PART II, SUBPART B. LAND DEVELOPMENT CODE,

> AMENDING CHAPTER 126. ZONING, ARTICLE XVII. TELECOMMUNICATIONS DEVICES, DIVISION 2. MASTER PLAN, SECTION 126-1536 "TELECOMMUNICATIONS TOLERANT AREAS", TO UPDATE THE NAMES OF SITES LISTED IN SUBSECTION (b) AS TELECOMMUNICATIONS TOLERANT AREAS AND TO CORRECT AN INCORRECT REFERENCE IN SUBSECTION (f) TO SUBSECTION (b) ;

PROVIDING FOR CODIFICATION; PROVIDING FOR CONFLICT AND SEVERANCE; AND PROVIDING AN EFFECTIVE DATE.

Council scheduled a Second Reading and Public Hearing for September 16, 2003 at 9:00 a.m.

September 16, 2003 – Second Reading ORDINANCE 03-014

AN ORDINANCE AMENDING THE SANIBEL CODE, PART II, SUBPART B. LAND DEVELOPMENT CODE,

AMENDING CHAPTER 126. ZONING, ARTICLE XVII. TELECOMMUNICATIONS DEVICES, DIVISION 2. MASTER PLAN, SECTION 126-1536 "TELECOMMUNICATIONS TOLERANT AREAS", TO UPDATE THE NAMES OF SITES LISTED IN SUBSECTION (b) AS TELECOMMUNICATIONS TOLERANT AREAS AND TO CORRECT AN INCORRECT REFERENCE IN SUBSECTION (f) TO SUBSECTION (b) ;

PROVIDING FOR CODIFICATION; PROVIDING FOR CONFLICT AND SEVERANCE; AND PROVIDING AN EFFECTIVE DATE. - Adopted

March 21, 2006 – RESOLUTION 06-045

A RESOLUTION APPROVING A LEASE AGREEMENT BETWEEN THE CITY OF SANIBEL AND VERIZON WIRELESS PERSONAL COMMUNICATIONS, LP, d/b/a VERIZON WIRELESS; AND PROVIDING AN EFFECTIVE DATE. - Adopted

May 8, 2006 – Verizon Lease Agreement - Executed

May 16, 2006 – Final Disposition on Design on Telecommunication Tower at 2222 Wulfert Road – Planning Department Memo Attached, CC Agenda Item and CC Minutes Attached

August 21, 2007 – Tri-Party Sublease Agreement at 2222 Wulfert Road

February 2008 – Planning Department Conditions & Capacity Report Existing Telecommunications Facilities and Telecommunications Tolerant Areas Report for Council

April 1, 2008 – Planning Department Report on Conditions and Capacity Report Existing Telecommunications Facilities and Telecommunications Tolerant Areas

September 16, 2008 – Council approved tri-party sublease agreement between City of Sanibel, Verizon Wireless Personal Communications, LP d/b/a Verizon Wireless and T-Mobile South, LLC

August 4, 2009 – Lease Agreement With Lee County 2222 Wulfert Road

July 15, 2010 – Application Compliance Statement

December 7, 2010 – RESOLUTION 10-123

A RESOLUTION APPROVING THE CONSTRUCTION OF A 149 FOOT MONOPOLE ABOVE GROUND LEVEL (AGL) TELECOMMUNICATIONS TOWER, TO ATTACH ANTENNAS TO THE MONOPOLE, CONSTRUCT EQUIPMENT SHELTER TO HOUSE THE BASE TRANSCEIVER STATION (BTS), VIA CABLES TO CONNECT THE BTS TO THE ANTENNA AND TO FENCE IN AN AREA 25' X 75' TO CONTAIN THE EQUIPMENT ON CITY-OWNED LAND AT THE DONAX STREET WASTEWATER RECLAMATION FACILITY, AT 630 DONAX STREET IN THE CITY OF SANIBEL; THE REQUEST IS BEING PROCESSED UNDER THE PROVISION OF LAND DEVELOPMENT CODE SECTION 78-7, CITY EXEMPTED; THE APPLICATION IS NUMBERED

10-5524 AND FILED ON BEHALF OF VERIZON WIRELESS PERSONAL COMMUNICATIONS LP, d/b/a VERIZON WIRELESS; AND PROVIDING AN EFFECTIVE DATE

Not adopted – Minutes and Resolution Attached Plus PowerPoint Presentation

December 7, 2010 - Planning gave staff report at Council meeting

February 1, 2011 – RESOLUTION 11-007

A RESOLUTION APPROVING THE CONSTRUCTION OF A 149 FOOT MONOPOLE ABOVE GROUND LEVEL (AGL) TELECOMMUNICATIONS TOWER, OF A FLAGPOLE-TYPE DESIGN, TO ATTACH INTERNAL ANTENNAS INSIDE THE MONOPOLE, CONSTRUCT EQUIPMENT SHELTERS TO HOUSE THE BASE TRANSCEIVER STATION (BTS), VIA CABLES TO CONNECT THE BTS TO THE ANTENNA AND TO FENCE IN AN AREA 25' X 75' TO CONTAIN THE EQUIPMENT ON CITY-OWNED LAND AT THE DONAX STREET WASTEWATER RECLAMATION FACILITY, AT 930 DONAX STREET IN THE CITY OF SANIBEL; THE REQUEST IS BEING PROCESSED UNDER THE PROVISION OF LAND DEVELOPMENT CODE SECTION 78-7, CITY EXEMPTED; THE APPLICATION IS NUMBERED 10-5524 AND FILED ON BEHALF OF VERIZON WIRELESS PERSONAL COMMUNICATIONS LP, d/b/a VERIZON WIRELESS; AND PROVIDING AN EFFECTIVE DATE - Adopted

February 7, 2012 – RESOLUTION 12-015

A RESOLUTION APPROVING A LEASE AGREEMENT BETWEEN THE CITY OF SANIBEL AND VERIZON WIRELESS PERSONAL COMMUNICATIONS, LP, d/b/a VERIZON WIRELESS FOR APPROXIMATELY 1,875 SQUARE FEET OF LAND AT THE DONAX WATER RECLAMATION FACILITY (930 DONAX STREET, SANIBEL) FOR CONSTRUCTION OF A PREVIOUSLY APPROVED COMMUNICATION TOWER; AND PROVIDING AN EFFECTIVE DATE. - Adopted

April 3, 2012 – Discussion of Communication Tower Approved in Resolution 11-007(Adopted 2-1-2011) – City Manager noted that this would be discussed on the May 1st agenda

May 1, 2012 – CC Meeting - Verizon Requested Item be Pulled Until the June 5, 2012 CC meeting .....

Matters relating to the Communication Tower approved in Resolution 11-007 to be constructed by Verizon Wireless at the Donax Waste Water Reclamation Facility property

- Direction to Verizon Wireless on two issues pursuant to the requirement of Resolution 11-007 (which approved the communication tower at the Donax site):

Whether the flag pulley system is to be constructed on the inside or the outside of the communication tower (Note: The communication tower is to be constructed with a "stealth design" as a flag pole with antennae on the inside of the pole)

- 2. Whether down lighting will be required as part of construction in the event the flying of a flag is authorized at a later date

June 5, 2012 – Discussion of Communication Tower Approved in Resolution 11-007 (Adopted February 1, 2011) Minutes attached

February 5, 2013

First Amendment to the Verizon lease agreement for site 68996 – Sanibel Donax Wastewater Treatment Plant (WWTP), 930 Donax Road to extend until June 30, 2013 time frame for Verizon to file a completed building permit application, and authorize the Mayor to execute same.

May 7, 2013 – Verizon Tower Update – Council extended the time frame for the development until June 30, 2013 - Minutes attached

June 4, 2013 – Verizon Tower Update – City Attorney noted the application was submitted and is under review and there was enough time to correct any application deficiencies. - Minutes attached

January 7, 2014 – Verizon Tower Update - Minutes attached

Mayor Davison declared a first reading and scheduled the Second Reading for August 5, 1997 at 10 00 a m

Item 10b AN ORDINANCE AMENDING THE LAND DEVELOPMENT CODE OF THE CITY OF SANIBEL BY CREATING A NEW SUB-SUBSECTION I E 22 f(12) TO PROVIDE THAT THE CITY MANAGER OR HIS DESIGNEE SHALL GRANT A SPECIAL EVENTS PERMIT IF THE ACTIVITY FOR WHICH IT IS REQUESTED HAS BEEN HELD PREVIOUSLY AND HAS DEMONSTRATED COMPLIANCE WITH PERMIT CONDITIONS OF ANY PREVIOUS PERMIT, AMENDING SUBSECTION I E 22 n TO PROVIDE THAT NON-COMPLIANCE WITH THE CONDITIONS OF AN AUTHORIZED SPECIAL EVENTS PERMIT MAY BE GROUNDS FOR DENIAL OF FUTURE PERMIT APPLICATIONS; PROVIDING FOR CODIFICATION, PROVIDING FOR CONFLICT AND SEVERANCE, AND PROVIDING AN EFFECTIVE DATE (Submitted by the City of Sanibel Application No. 97-194 LDC)

Mayor Davison declared a first reading and scheduled the Second Reading for August 5, 1997 at 10 15 a m.

Item 14 City Attorney's Report
Item 14a. Update on Lee County Ordinance 97-08 - Creation of Preservation Lands Taxing Unit (MSTU)

City Attorney Pritt reviewed a letter from Lee County Attorney James G Yaeger advising that the MSTU County ordinance has not been confirmed by other cities and will be deemed repealed as of July 1, 1997.

Item 14c Report on Delinquent Occupational Licenses

City Attorney Pritt reviewed his July 2 memo which advised that remaining accounts are uncollectable. Assistant Finance Director Charmaine Yeadon was present. Council consensus was to authorize the Finance Director to write off the accounts as recommended.

Item 14d: Report on Delinquent Alarm Fees

The City Attorney reviewed his July 10 memo advising that all but two delinquent alarm fees have been paid.

Item 14e Discussion of Telecommunications Ordinance

Summer law clerk Scott Newsom used overhead slides to illustrate the latest telecommunications technology· traditional earth stations (currently covered under the City's ordinance), over-the-air reception devices (antennas and dish antennas) and personal wireless service facilities. He explained that the 1996 Telecommunications Act gives local governments some control over the telecommunications devices that can be used, and the draft ordinance addresses the zoning changes needed to regulate the new devices in an attempt to maintain the aesthetics and natural beauty of the island. Discussion ensued, with Mr. Newsom explaining that the City can construct its own towers as long as long as demands for service are met. Upon Council agreement that staff should proceed with taking the ordinance through the normal public hearing process, Mayor Davison and City Attorney Pritt noted the need to pass a resolution notifying the public of the City's intent to propose zoning changes. City Manager Price read the following title into the record: A RESOLUTION DECLARING THE CITY'S INTENTION TO PROPOSE CHANGES IN THE SANIBEL LAND DEVELOPMENT CODE PERTAINING TO TELECOMMUNICATIONS, DECLARING THAT SUCH ZONING IS IN PROGRESS, DIRECTING THE CITY MANAGER AND CITY ATTORNEY TO CAUSE TO BE PUBLISHED A NOTICE OF PENDENCY OF AN ORDINANCE PERTAINING TO TELECOMMUNICATIONS DEVICES; REGULATION OF EARTH STATIONS, OVER-THE-AIR

118

RECEPTION DEVICES, PERSONAL WIRELESS SERVICE FACILITIES AND RELATED MATTERS, DIRECTING THE CITY MANAGER AND CITY ATTORNEY TO INSTITUTE PROCEEDINGS BEFORE THE PLANNING COMMISSION APPROPRIATE FOR ITS REVIEW OF PROPOSED CHANGES, AND PROVIDING AN EFFECTIVE DATE

Councilman Kain moved approval. Councilman Madison seconded From the public, Tina Turner, Teltronics Service Management, consulant to SPRINT, advised her company is considering replacing the existing facility on Sanibel with a self-supporting tower She recommended, if the City is considering constructing its own tower, they start right away There was no further Council comment, no public input, and the question was called. Reding (Aye), Janes (Aye), Madison (Aye), Davison (Aye), Kain (Aye) The motion passed unanimously.

Item 11 Public hearing and consideration of A RESOLUTION APPROVING AND ACCEPTING A BILL OF SALE GRANT OF WASTEWATER COLLECTION SYSTEM EASEMENT AND RELATED FIXTURES AND GRANTORS AFFIDAVIT FOR THE PERIWINKLE PINES SUBDIVISION WASTEWATER COLLECTION SYSTEM, AND PROVIDING AN EFFECTIVE DATE

115

City Manager Price read the title Utilities Director John Hefty distributed a revised memo, and reviewed the findings that the purchase is in the public interest and requirements of State Statute 180 301 **Vice Mayor Janes moved approval.** Councilman Kain seconded During public comment, Larry Bator was advised that the subdivision had already paid transmission line fees to the previous owner of the system. There was no further Council comment or public input and the question was called: Reding (Aye), Janes (Aye), Madison (Aye), Davison (Aye), Kain (Aye). The motion passed unanimously

Item 12: Selection of sites for Community Housing and Resources, Inc. (CHR) Senior Citizen project site selection.

Item 12a Consideration of A RESOLUTION APPROVING THE CONTRACT FOR SALE AND PURCHASE OF THE PAULSEN PROPERTY (STRAP NO. 26-46-22-T3-0004 0090); AUTHORIZING THE CITY MANAGER AND CITY ATTORNEY TO TAKE STEPS AS ARE NECESSARY TO CLOSE THE TRANSACTION; AND PROVIDING AN EFFECTIVE DATE.

116

Item 12b. Consideration of A RESOLUTION APPROVING A CONTRACT FOR SALE AND PURCHASE OF THE BAILEY/KONTINOS PROPERTY (STRAP NO 26-46-22-T4-01301 0010), AUTHORIZING THE CITY MANAGER AND CITY ATTORNEY TO TAKE STEPS AS ARE NECESSARY TO CLOSE THE TRANSACTION; AND PROVIDING AN EFFECTIVE DATE

not purchased

City Manager Price read both resolution titles into the record. Assistant City Manager Bill Mills reviewed the City Manager's July 15 memo, which included staff's recommendation to purchase the Paulsen property at $905,000 if acceptable to the owner; otherwise, purchase the Bailey/Kontinos property at $899,000. He recapped staff's recommendation to borrow the funds on a 15-year balloon at 5 077% and reviewed debt service for both properties. There was discussion of the disparity between Mr Paulsen's ($1.2 million) and the City's appraisal ($905,000). Mayor Davison called for public comment

In response to Council's inquiry regarding disparity in the Paulsen property appraisals, Mr Paulsen's representative, Ray Fenton, gave a history of the property and the City's previous proposal to purchase the property Upon indication that the City was again interested in acquiring the property, the owner offered to sell it to the City for the appraised price. Mr Fenton pointed out the appraisal of $1 2 million was done by an appraiser from the City's approved list

Erick Lindblad, Sanibel-Captiva Conservation Foundation (SCCF) expressed support for purchase of

CITY OF SANIBEL

RESOLUTION NO. 97 - 118

A RESOLUTION DECLARING THE CITY'S INTENTION TO PROPOSE CHANGES IN THE SANIBEL LAND DEVELOPMENT CODE PERTAINING TO TELECOMMUNICATIONS; DECLARING THAT SUCH ZONING IS IN PROGRESS; DIRECTING THE CITY MANAGER AND CITY ATTORNEY TO CAUSE TO BE PUBLISHED A NOTICE OF PENDENCY OF AN ORDINANCE PERTAINING TO TELECOMMUNICATIONS, INCLUDING WITHOUT LIMITATION, AMENDED DEFINITIONS; AMENDMENTS TO HEIGHT LIMITATIONS FOR CERTAIN TELECOMMUNICATIONS DEVICES; REGULATIONS OF EARTH STATIONS, OVER-THE-AIR RECEPTION DEVICES, PERSONAL WIRELESS SERVICE FACILITIES, AND RELATED MATTERS; DIRECTING THE CITY MANAGER AND CITY ATTORNEY TO INSTITUTE PROCEEDINGS BEFORE THE PLANNING COMMISSION APPROPRIATE FOR ITS REVIEW OF THE PROPOSED CHANGES; AND PROVIDING AN EFFECTIVE DATE.

WHEREAS, the United States Congress has enacted the Telecommunications Act of 1996; and

WHEREAS, the Federal Communications Commission has amended current regulations and adopted new regulations concerning the scope of local authority to regulate various types of telecommunications devices under the new Act; and

WHEREAS, it is therefore necessary to amend Sanibel's land use regulations to conform with the requirements of the new Act;

NOW, THEREFORE, BE IT RESOLVED by the City Council of the City of Sanibel, Lee County, Florida:

Section 1. The City of Sanibel, Florida, hereby gives official notice of the pendency of proposed changes in its zoning regulations, and declares that such zoning is in progress, the general substance of which is as follows:

> AN ORDINANCE RELATING TO TELECOMMUNICATIONS; AMENDING SECTION I.B.2.c. OF THE LAND DEVELOPMENT CODE OF THE CITY OF SANIBEL BY AMENDING THE DEFINITION OF "EARTH STATION"; AMENDING SECTION I.E.10., HEIGHT EXCEPTIONS, OF THE LAND DEVELOPMENT CODE OF THE CITY OF SANIBEL; AMENDING SECTION

I.E.32. TO REFLECT CHANGES MADE NECESSARY BY THE TELECOMMUNICATIONS ACT OF 1996; PROVIDING REGULATIONS ON EARTH STATIONS; PROVIDING REGULATIONS ON OVER-THE-AIR RECEPTION DEVICES; PROVIDING REGULATIONS ON PERSONAL WIRELESS SERVICE FACILITIES; PROVIDING FOR CODIFICATION; PROVIDING FOR CONFLICT AND SEVERANCE; AND PROVIDING AN EFFECTIVE DATE.

Section 2. The City Manager and City Attorney are hereby directed to cause to be published a notice of the pendency of such proposed amendments and to institute proceedings before the Planning Commission appropriate for its review.

Section 3. Persons contemplating or proceeding with plans for construction or placement of earth stations, over-the-air reception devices, personal wireless service facilities or similar telecommunications devices should not do so unless and until they have considered the pendency of the proposed ordinance and until final action is taken upon such proposed ordinance.

Section 4. Further public notice will be given upon the proposed zoning regulation amendment.

Section 5. Effective date.

This resolution shall take effect immediately upon adoption.

DULY PASSED AND ENACTED by the Council of the City of Sanibel, Lee County, Florida, this 15th day of July, 1997.

AUTHENTICATION:

Robert B. Davison
Mayor

Mary L. Price
City Clerk

APPROVED AS TO FORM: Robert D. Pritt
City Attorney

7/10/97
Date

Vote of Councilmembers:

Davison	aye
Janes	aye
Kain	aye
Madison	aye
Reding	aye

Date filed with City Clerk: JUL 16 1997

b5zipl

RESOLUTION NO. 97 - 58

CITY OF SANIBEL

PLANNING COMMISSION

IN THE MATTER OF: Recommendation to City Council

APPLICANT: Sanibel Planning Commission

APPLICATION NO.: Re: Telecommunication Towers

ADOPTION OF RESOLUTION: August 12, 1997

WHEREAS, Sanibel Code of Ordinances Section 14-15 sets forth the functions, powers and duties of the Planning Commission to include preparing policies regarding land uses and development in the City of Sanibel; acquiring and maintaining information and materials that are necessary to an understanding of past trends and present conditions and to make recommendations to the City Council with regard to capital improvements and revisions to the Comprehensive Plan and Land Development Code; and

WHEREAS, the Planning Commission is in the process of reviewing a proposed ordinance on Telecommunications, 97-195 LDC.

NOW, THEREFORE, BE IT RESOLVED by the Planning Commission that it recommends to City Council that the City be more proactive in its participation and implementation of the Telecommunications Act of 1996 to include consideration of leasing sites on publicly owned property to the service providers and consideration of construction of communication towers by the City.

The foregoing Resolution was adopted by the Planning Commission upon a motion by Planning Commission Member Edith Slayton, and seconded by Planning Commission Member Richard H. Downes, and the vote was as follows:

Stephen Mullins	Aye	Richard H. Downes	Aye
John Veenschoten	Absent (Excused)	Steven Greenstein	Aye
Louise Johnson	Absent (Excused)	Edith Slayton	Aye
Martin Harrity	Absent (Excused)		

DULY PASSED AND ADOPTED this 12th day of August, 1997.

SANIBEL PLANNING COMMISSION

Signed: _____ Date signed: Oct 30th, 1997
Chairman

Date filed with City Manager: 10-30-97
Filing Date

as stated in the Planning Department Staff Report (City Exhibit (C-1) dated August 7, 1997, and that the resolution be brought before the Planning Commission on September 9, 1997 at 10:00 A.M. Commissioner Edith Slayton seconded the motion, which passed by a vote of 4-0. Commissioners excused from this meeting were: Martin Harrity, Louise Johnson and Vice Chairman John Veenschoten.(TAPE SEVEN)

Commissioner Stephen Mullins moved to continue the public hearing and to direct the Planning Commission Attorney to prepare a resolution approving Development Permit Request Number 97-11493 and that the resolution is to contain the finding that what the applicant is proposing falls into the definition as a repair to the seawall cap replacement, as it has been determined at this hearing, and that the resolution also contain the conditions as listed in the Planning Department Staff Report (City Exhibit C-1) dated August 7, 1997, and that the resolution be brought before the Planning Commission on September 9, 1997 at 10:00 A.M. Commissioner Steve Greenstein seconded the motion, which passed by a vote of 4-0. Commissioners excused from this meeting were: Martin Harrity, Louise Johnson and Vice Chairman John Veenschoten.(TAPE SEVEN)

Prior to the hearing of Agenda Item Numbers 4 and 5 below, the Commission took action on Agenda Items 6 through 10, and postponed Agenda Item Number 11.(TAPE EIGHT)

Item #4. Consideration of an ordinance relating to telecommunications; amending Section I.B.2.c. of the Land Development Code of the City of Sanibel by amending the definition of "Earth Station"; amending Section I.E.10., Height Exceptions, of the Land Development Code of the City of Sanibel; amending Section I.E.32. to reflect changes made necessary by the Telecommunications Act of 1996; providing regulations on earth stations; providing regulations on over-the-air reception devices; providing regulations on personal wireless service facilities; providing for codification; providing for conflict and severance; and providing an effective date. Submitted by the City of Sanibel. Application No. 97-195 LDC.

Bruce Rogers read the Item description. In addition to the Planning Commission, the major participants in the discussion were: Planning Department Director, Bruce Rogers; Assistant Planning Department Director, Ken Pfalzer; City of Sanibel Legal Affairs Law Clerk Scott Newsom; Tina Turner, Zoning Manager representing Sprint PCS; and Scott Cheek, Senior Acquisition Manager representing Sprint PCS. Mr. Scott Newsom, City of Sanibel Legal Affairs Law Clerk, using a series of photocopied photographs he prepared for the Commission, explained the various technologies and equipment the proposed ordinance addresses; the goal of bringing the Land Development Code into compliance with the Federal Telecommunications Act of 1996; and the specific changes, and reason for those changes, that would be made by the ordinance. Mr. Newsom explained: Roof Mounted and Ground Installed Earth Stations; Direct Broadcast Satellite

Dishes and how the satellite signal is beamed to earth and received by an antenna; MMDS, wireless cable, antennas; monopoles and monopoles disguised as palm trees; self-supporting (lattice) towers; guy-wired towers; and the collocation of receivers on monopoles and towers. Commission discussion was ongoing on each of the topics as they were explained by Mr. Newsom. A further discussion ensued regarding: the possibility of promoting collocational towers on Sanibel to keep down the number of towers that might be built; the leasing of land for towers; the leasing of space on towers; government vs. private ownership of towers; government vs. private construction of towers; the need to take into consideration the future economic development of Sanibel; the possible study of migratory bird flight paths; and the seeking of waivers from the Federal Communications Commission to ensure that towers are not in the migratory birds' flight paths. The discussion continued centering on the threshold issue of the City having better control over the impacts of high-rise towers by providing the towers needed by service providers. Tina Turner, Zoning Manager representing Sprint PCS, and Scott Cheek, Senior Acquisition Manager, also representing Sprint PCS. were called by the Commission to provide input into the discussions. Ms. Turner and Mr. Cheek discussed: the independent providers of telecommunication services being under time constraints from the Federal Government to begin providing service; the types and heights of poles; the leasing of land for towers (poles); service providers collocating their devices on the same towers (poles) and their individual device height requirements; pole locations; the use of existing towers if they are the proper height; information on the special exception tower/site application that Ms. Turner (Sprint PCS) has been discussing with the Planning Department; the construction and use of self-supporting (lattice) towers and the ability to add to their height, if necessary, after they are initially built and in use; City Hall use of tower/pole facilities; and off-shore placement of towers. A further discussion ensued regarding City control within the Telecommunications Act of 1996; the recommending to City Council a more proactive participation within the 1996 Act; and to also recommend to the City Council investigation into the feasibility of the City constructing and leasing communications towers to the telecommunication providers. During public comment, Ann Belleaw asked if a tower were built on Rabbit Road, and the tower at City Hall were extended (made taller), would they take care of all the tower needs of the telecommunications companies, and Mr. Scott Cheek, Senior Acquisition Manager representing Sprint PCS, said it would take care of the majority of their needs. Mr. Cheek also said that extending (making taller) the tower at City Hall would be a good suggestion the City might want to look at if it were to consider building its own tower. Larry Bator suggested using towers off Island, across the Bay, using fiberoptic lines for communication.

Commissioner Steve Greenstein moved to continue the public hearing on proposed Land Development Code Ordinance Number 97-195 (Control Number CA754, Draft 3, dated 8-7-97) to September 9, 1997 at 10:30 A.M. Commissioner Stephen Mullins seconded the motion, which passed by a vote of 4-0. Commissioners excused from this meeting were: Martin Harrity, Louise Johnson and Vice Chairman John Veenschoten.(TAPE TEN)

Commissioner Edith Slayton moved to recommend to City Council that preliminary investigation be done of the feasibility of the City of Sanibel having more proactive participation in the Telecommunications Act of 1996 then presented in this ordinance Number 97-195 LDC (Control Number CA754, Draft 3, dated 8-7-97) with respect of leasing sites and the possible construction of towers. Chairman Richard Downes seconded the motion, which passed by a vote of 4-0. Commissioners excused from this meeting were: Martin Harrity, Louise Johnson and Vice Chairman John Veenschoten.(TAPE TEN)

Item #5. Consideration of an ordinance amending the Sanibel Land Development Code; deleting current Section III.A.2. and replacing it with a new Section III.A.2., Conduct of Hearings; Action by Commission; Amending Section III.A.3., Appeals, by adding a new subsection g. pertaining to certain types of challenges; amending Section III.B.3., Filing Procedure, by amending paragraphs a., b., c., and d., and by creating a new paragraph cc. to provide that if a claim is made that any portion of the Land Development Code is invalid, the claim shall be brought before the Planning Commission; and creating a new Paragraph dd. to provide for waiver of requirements which are not essential to the processing of the application; amending Section III.B.9., Hearing Procedure for Long-form Development Permits, to title the Section Long-form Development Permits--Scheduling and Notice, and deleting unnecessary language; deleting current Section III.B.10. and replacing it with a new Section III.B.10., Long-form Development Permits--Hearing; deleting current Section III.B.12. and replacing it with a new Section III.B.12., Long-form Development Permits--Action on Application; providing for codification; providing for conflict and severance; and providing an effective date. Submitted by the City of Sanibel. Application No. 97-196 LDC.

Commission consensus was to, because of time constraints, continue this Item to the next Planning Commission Meeting.

Commissioner Edith Slayton moved to continue the public hearing on proposed Land Development Code Ordinance Number 97-196 to September 9, 1997 at 11:30 A.M. Commissioner Steve Greenstein seconded the motion, which passed by a vote of 4-0. Commissioners excused from this meeting were: Martin Harrity, Louise Johnson and Vice Chairman John Veenschoten.(TAPE TEN)

Item #6. Approval of minutes of regular meeting of July 22, 1997.

Commissioner Steve Greenstein moved to accept the minutes as amended at this meeting. Commissioner Stephen Mullins seconded the motion, which passed by a vote of 4-0. Commissioners excused from this meeting were: Martin Harrity, Louise Johnson and Vice Chairman John Veenschoten.(TAPE EIGHT)

Item 5. Planning Commission Report - Planning Commission Chairman Richard Downes expressed his pleasure in working with Mayor Davison He also reported on the November 11 Commission meeting.

Item 5a. Accept Planning Commission Resolution No. 97-56, Hurricane Preparedness.

Mayor Davison explained the resolution presents recommendations regarding hurricane preparedness in response to Council's request. Vice Mayor Janes recommended accepting the report and scheduling a workshop for in-depth discussion, to include citizen input. It was clarified that acceptance of the resolution does not mean acceptance of the conclusions. **Upon a motion by Councilman Madison and second by Councilman Kain, the resolution was unanimously accepted.** Following discussion, Council agreed to schedule a workshop for 1 30 p m on December 16, the afternoon session of the regular meeting. Planning Commission Chairman Downes clarified that the resolution reflects several votes on separate issues, the purpose of the recommendations is to inform Council as to the Commission's feelings on each matter discussed

Item 5b: Accept Planning Commission Resolution No. 97-58, Telecommunication Towers.

Planning Commission Chairman Downes explained the resolution recommends that Council be proactive in participation and implementation of the Telecommunications Act to include consideration of leasing sites on publicly owned property and also construction of towers by the City. In response to Council concerns regarding expert advice, it was explained that the Planning Director has sent out Requests for Proposals (RFP) for a consultant. There was also general agreement regarding the need to keep in contact with state legislators on this urgent matter. **Upon a motion by Councilman Madison, seconded by Councilman Kain, the resolution was unanimously accepted.**

Item 5c: Accept Planning Commission Resolution No. 97-45, review of Land Development Code Section, I.F 4.

Planning Commission Chairman Downes explained the recommendation that the language define unified development so that it would not include a combination of property where some of the property is already developed. **Following discussion, upon motion by Mayor Davison and second by Councilman Kain, Council voted unanimously to direct the City Attorney to prepare a notice of intent that the City plans to amend LDC Section I.F.4. Upon a motion by Vice Mayor Janes, seconded by Councilman Madison, Council unanimously accepted the resolution.**

CONSENT AGENDA

Item 6· Public Comment on Consent Agenda. - Alice Kyllo was advised that the land acquisition is a lot in Leisure Acres.

Item 7: Items to be pulled for discussion by Council or Staff. - City Manager Price pulled items 8b, c and e. Councilman Kain pulled item 8f.

Item 8: Approval of A RESOLUTION APPROVING AND ADOPTING ITEMS SET FORTH ON THE CITY COUNCIL CONSENT AGENDA; AND PROVIDING AN EFFECTIVE DATE.

City Manager Price read the title. **Councilman Kain moved approval of items 8a, d, g and h. Councilman Kain seconded. There was no further Council comment and the question was called: Madison (Aye), Davison (Aye), Kain (Aye), Reding (Aye), Janes (Aye). The motion passed unanimously.**

Section 2 Councilman Reding pointed out that AM radio stations don't come in clear and that it would be better to use FM public broadcasting like WGCU City Manager Price advised staff is contacting FM stations in an attempt to work out an arrangements **There was consensus to delete the reference to AM radio stations and concentrate on FM, especially WGCU public broadcasting.**
Section 3 Council concurred with recommendation and staff response
Section 4 Planning Commission Chairman Downes stated that staff's response was not responsive The Planning Commission felt that Sanibel should be evaluating evacuation routes and not rely on the County because their routes would be totally unavailable City Manager Price pointed out the County would be directing traffic and it would not be a good approach to publish different routes **Staff will do further research on Lee County evacuation routes.**
Section 5. Councilman Janes emphasized the need to plan for a mobile facility. Other Councilmembers indicated agreement. Commander Tomlinson explained the fixed site is intended to be the operations center, but agreed a mobile facility would be an important factor There was further discussion on the rationale for looking at a fixed location. **There was consensus to agree with staff recommendations, but add consideration of mobile facilities.**

Councilman Janes was excused from the meeting at 4:34 p.m

Section 6. Council concurred with recommendation and staff response
Section 7
(1) Council concurred with recommendation and staff response
(2). **There was consensus that volunteers should be referred to as "trained volunteers".**
(3) Mayor Kain recommended consideration of a refuge of last resort to accommodate people who might be trapped on the Causeway end of the island and said he hoped this recommendation would not preclude looking at additional refuges of last resort. The recommendation and staff response were accepted without change.
Section 8. Planning Commission Chairman Downes explained that the Planning Commission was not unanimous in this recommendation, and the minority and majority views are recorded in the minutes.
Section 9. Planning Commission Downes believed the response was not responsive. He explained the Planning Commission view was that the more contact and planning the City has with other jurisdictions, the better. Commander Tomlinson pointed out that Sanibel does coordinate with Captiva, South Seas submits a plan every year, and the City also communicates with other cities. However, most evacuation routes have been thought out thoroughly by the County, who has also taken steps to coordinate. There was some discussion that it would not be wise for Sanibel to contradict County or State authorities. **Staff will review County evacuation routes to see if they are satisfactory.**
Section 10. Council accepted recommendations and staff response.
Section 11. Council accepted recommendations and staff response with no changes.
Section 12. City Manager Price stated he was very reluctant to provide a list of refuge facilities, preferring the official refuge to be the Library and the Emergency Operations Center at City Hall. Other structures would be considered overflow if needed. Mayor Kain noted that if we can get radio communications it solves the problem of telling people where to go if they have already left home. He suggested there are still some open issues regarding staff and provisions for refuges of last resort. Council accepted the report with modifications as noted.

Item 14d: Approval of A RESOLUTION REVIEWING PROPOSALS FOR PROFESSIONAL CONSULTING SERVICES FOR TELECOMMUNICATIONS MATTERS; MAKING A DETERMINATION AS TO THE TOP-RANKED FIRM FOR SUCH SERVICES; AUTHORIZING THE CITY MANAGER AND CITY ATTORNEY TO ATTEMPT TO NEGOTIATE AN AGREEMENT WITH SUCH FIRM; AND PROVIDING AN EFFECTIVE DATE.

City Manager Price read the title. Planning Director Bruce Rogers distributed copies of the request for proposals, explaining ten excellent responses were received. Staff is recommending that Council authorize negotiations with the firm of Kurtis & Associates, P.C. located in Washington, D.C. The firm's attorneys and radio frequency engineers practice exclusively in the field of communications, and it was felt that the combination of specialists would be beneficial for the City's needs. In response to Council inquiry, Director Rogers provided information on other firms who submitted proposals. He advised there is no

fixed cost as yet. Council is just asking for authority to begin negotiations, after which they will come back to Council with a contract for approval **Councilman Davison concluded that Kurtis & Associate, P.C. was the best firm for the City's purposes, and moved approval. Councilman Reding seconded. There was no further Council comment or public input and the question was called: Janes (Excused), Kain (Aye), Madison (Excused), Reding (Aye), Davison (Aye). The motion passed 3-0.**

243 *Item 14e* Approval of A RESOLUTION REVIEWING A CITY-INITIATED DEVELOPMENT REFERRED TO AS THE SANIBEL SEWER SYSTEM EXPANSION PROJECT; DETERMINING WHETHER THE PROJECT IS CONSISTENT WITH THE SANIBEL PLAN, APPROVING THE PROJECT: AND PROVIDING AN EFFECTIVE DATE.

City Manager Price read the title Assistant City Manager Bill Mills explained the resolution declares the sewer expansion project to be City-exempt and determines that it is consistent with the Sanibel Plan The attached site plan provided additional details and a memo from the Planning Department finds that the project is not inconsistent with the Sanibel Plan **Councilman Davison moved approval. Councilman Reding seconded. There was no further Council comment or public input and the question was called: Janes (Excused), Kain (Aye), Madison (Excused), Reding (Aye), Davison (Aye). The motion passed 3-0.**

Item 14f: Approval of A RESOLUTION ACCEPTING THE COMPLETED PRELIMINARY ASSESSMENT ROLL FOR THE EXPANSION AND EXTENSION OF THE SANIBEL SEWER SYSTEM IN CERTAIN AREAS OF SANIBEL ISLAND IN LEE COUNTY, FLORIDA, REFERRED TO AS THE "SANIBEL SEWER SYSTEM EXPANSION PROJECT", PURSUANT TO THE HOME RULE POWER OF THE CITY OF SANIBEL AND GENERAL LAW, AND IN ACCORDANCE WITH PROCEDURES SET FORTH IN CHAPTER 170, FLORIDA STATUTES, AS AUTHORIZED BY RESOLUTION OF THE COUNCIL OF THE CITY OF SANIBEL ADOPTED DECEMBER 2, 1997; AND PROVIDING AN EFFECTIVE DATE

City Attorney Price distributed a revised resolution City Manager Price read the revised title The City Attorney explained the changes and why they were made Assistant City Manager Bill Mills advised of address changes that were minor in nature. **Councilman Reding moved approval of the revised resolution and amended attachments. Councilman Davison seconded. There was no further Council comment or public input and the question was called: Janes (Excused), Kain (Aye), Madison (Excused), Reding (Aye), Davison (Aye). The motion passed 3-0.**

45 *Item 14g:* Approval of A RESOLUTION PERTAINING TO THE SANIBEL SEWER SYSTEM EXPANSION PROJECT AND SPECIAL ASSESSMENT; FIXING A TIME AND PLACE AT WHICH OWNERS OF PROPERTY TO BE ASSESSED OR OTHER PERSONS INTERESTED, MAY APPEAR BEFORE THE SANIBEL CITY COUNCIL AND BE HEARD ON ALL MATTERS CONCERNING THE PROJECT AND ASSESSMENT, AND PROVIDING AN EFFECTIVE DATE.

City Manager Price read the title. Assistant City Manager Bill Mills explained the City is required to run two advertisements fixing the time and place for assessment hearings. He asked for and received Council confirmation of dates: Assessment Hearing, Wednesday, January 14, 1:00 P.M. at the Sanibel Community Association; Board of Equalization, Wednesday, January 28 at 9 00 P M. in MacKenzie Hall. **Councilman Reding moved approval. Councilman Davison seconded. There was no further Council comment or public input and the question was called: Janes (Excused), Kain (Aye), Madison (Excused), Reding (Aye), Davison (Aye). The motion passed 3-0.**

Item 14i: Approval of A RESOLUTION ACCEPTING WASTEWATER COLLECTION AND TRANSMISSION EASEMENTS FROM SANIBEL PROPERTY OWNERS FOR THE SANIBEL SEWER SYSTEM EXPANSION PROJECT; AUTHORIZING THE CITY ATTORNEY TO RECORD SAME, AND PROVIDING AN EFFECTIVE DATE.

City Manager Price read the title of a revised resolution accepting two easements. It was explained the City paid for one of the easements. **Councilman Davison moved approval. Councilman Reding seconded. There was no further Council comment or public input and the question was called:**

CITY OF SANIBEL

RESOLUTION NO. 97 - 242

A RESOLUTION REVIEWING PROPOSALS FOR PROFESSIONAL CONSULTING SERVICES FOR TELECOMMUNICATIONS MATTERS; MAKING A DETERMINATION AS TO THE TOP-RANKED FIRM FOR SUCH SERVICES; AUTHORIZING THE CITY MANAGER AND CITY ATTORNEY TO ATTEMPT TO NEGOTIATE AN AGREEMENT WITH SUCH FIRM; AND PROVIDING AN EFFECTIVE DATE.

WHEREAS, the City has solicited proposals for professional services to assist the City in preparing and implementing a telecommunications ordinance and in further reviewing applications for telecommunications towers and the like; and

WHEREAS, a review of proposals has been conducted by the staff and by Council; and

WHEREAS, the following firm as been identified and ranked by this Council as the top-ranked firm for provision of such services;

NOW, THEREFORE, BE IT RESOLVED by the City Council of the City of Sanibel, Florida:

Section 1. The City Council hereby determines that the following firm is the top-ranked firm for consideration of professional consulting services in conjunction with telecommunications matters, including but not limited to, assistance in preparation and implementation of a telecommunications ordinance and consulting services concerning applications for towers and other telecommunications devices and related matters: Kurtis & Associates, P.C.

Section 2. The City Manager and City Attorney are hereby authorized and directed to attempt to negotiate a contract with

said firm for the services described above.

Section 3. Effective Date.

This Resolution shall take effect immediately upon adoption.

DULY PASSED AND ENACTED by the City Council of the City of Sanibel, Lee County, Florida, this 16th day of December, 1997.

AUTHENTICATION:

Wallace M. Kain
Mayor

Nancy S. Price
City Clerk

APPROVED AS TO FORM: Pamela Phillips
City Attorney

12/10/97
Date

Vote of Councilmembers:

Davison	Aye
Janes	Excused
Kain	Aye
Madison	Excused
Reding	Aye

Date filed with City Clerk: DEC 17 1997

RES-TELECOMMUNICATIONS.ORDS14

how Council should proceed. Councilman Janes suggested it might be helpful to interview the surviving candidates. Councilman Reding agreed, and suggested postponing appointment of the seventh member to the February 3 Council meeting. Consensus was to postpone the appointment and arrange interviews with candidates as requested by Councilmembers. Mayor Kain summarized, Council has established the number of Planning Commissioners at seven, has appointed one member, and is postponing appointment of a seventh member to give Councilmembers an opportunity to interview candidates. Following discussion of candidates to be considered for appointment at the February 3 Council meeting, consensus was to consider the three candidates who had received votes on the last ballot--Phyllis Bogen, Jean Samsel and Jack Samler. Councilman Janes, however, stated he did not intend to narrow the list of candidates to three and would talk to anyone who wished to be considered.

City Manager Price read the title of the resolution appointing Nola Theiss to the Planning Commission for a term ending January 8, 2001. **Councilman Davison moved approval. Councilman Reding seconded. There was no further discussion and the question was called: Janes (Aye), Kain (Aye), Madison (Aye), Reding (Aye), Davison (Aye). The motion passed unanimously.**

CONSENT AGENDA

ANY PERSON MAY REQUEST THAT COUNCIL REMOVE AN ITEM FROM THE CONSENT AGENDA FOR DISCUSSION BY NOTIFYING THE CITY MANAGER/CITY CLERK, OR A COUNCIL MEMBER PRIOR TO THE MEETING.

Item 8: Public Comment on Consent Agenda.

Item 9: Items to be pulled for discussion by Council or Staff.

Councilman Davison pulled item 10e. The City Attorney pointed out resolutions where "1997" was changed to "1998" to correct scriveners errors and advised the changed dates do not affect the substance of the resolution.

Item 10: Approval of A RESOLUTION APPROVING AND ADOPTING ITEMS SET FORTH ON THE CITY COUNCIL CONSENT AGENDA, AND PROVIDING AN EFFECTIVE DATE.

City Manager Price read the title. **Councilman Davison moved approval of all consent items except 10e. Vice Mayor Madison seconded. There was no further discussion and the question was called: Janes (Aye), Kain (Aye), Madison (Aye), Reding (Aye), Davison (Aye). The motion passed unanimously.**

Item 10a: Approval of A RESOLUTION APPROVING A CONTRACT WITH THE STATE OF FLORIDA DEPARTMENT OF ENVIRONMENTAL PROTECTION TO PROVIDE RESTORATION OF THE NATURAL VEGETATION AT SANIBEL STATE BOTANICAL SITE; AUTHORIZING THE CITY MANAGER TO ENTER INTO SAID AGREEMENT; AND PROVIDING AN EFFECTIVE DATE.

Item 10b: Approval of A RESOLUTION APPROVING A SUPPLEMENTAL COOPERATIVE AGREEMENT WITH J.N. "DING" DARLING NATIONAL WILDLIFE REFUGE FOR USE OF THE "GAVIN SITE" AS BRAZILIAN PEPPER DEBRIS DISPOSAL AREA; AUTHORIZING THE CITY MANAGER TO ENTER INTO SAID AGREEMENT; AND PROVIDING AN EFFECTIVE DATE.

Item 10c: Approval of A RESOLUTION APPROVING A CONTRACT BETWEEN KURTIS & ASSOCIATES, P.C., AND THE CITY OF SANIBEL FOR CONSULTING SERVICES CONCERNING TELECOMMUNICATIONS MATTERS; AUTHORIZING THE CITY MANAGER AND CITY ATTORNEY TO ENTER INTO THE AGREEMENT; AND PROVIDING AN EFFECTIVE DATE.

Item 10d: Approval of A RESOLUTION OF THE CITY OF SANIBEL REAFFIRMING ITS SUPPORT OF FLORIDA CONSTITUTION ARTICLE X, SECTION 16, LIMITING MARINE NET FISHING; REQUESTING THAT ALL VIOLATIONS OF ARTICLE X, SECTION 16, BE PROSECUTED TO THE

CITY OF SANIBEL

RESOLUTION NO. 98 -17

A RESOLUTION APPROVING A CONTRACT BETWEEN KURTIS & ASSOCIATES, P.C., AND THE CITY OF SANIBEL FOR CONSULTING SERVICES CONCERNING TELECOMMUNICATIONS MATTERS; AUTHORIZING THE CITY MANAGER AND CITY ATTORNEY TO ENTER INTO THE AGREEMENT; AND PROVIDING AN EFFECTIVE DATE.

WHEREAS, the City has solicited proposals for professional services to assist the City in preparing and implementing a telecommunications ordinance and in further reviewing applications for telecommunications and the like; and

WHEREAS, a review of proposals has been conducted by the staff and by Council; and

WHEREAS, the firm of Kurtis & Associates, P.C., has been identified and ranked by this Council as the top-ranked firm for provision of such services; and

WHEREAS, pursuant to Resolution No. 97-242, adopted on December 16, 1997, the City Council authorized and directed the City Manager and City Attorney to attempt to negotiate a contract with the firm; and

WHEREAS, the firm and the staff have submitted a proposed contract for review by this Council,

NOW, THEREFORE, BE IT RESOLVED by the City Council of the City of Sanibel, Lee County, Florida:

Section 1. The agreement for professional consulting services for telecommunications matters between Kurtis & Associates, P.C., and the City of Sanibel, a copy of which will be kept on file with

CONSENT AGENDA ITEM

the City Manager and which is referred to as Contract No. 98-01-06, is hereby approved.

Section 2. The City Manager and City Attorney are hereby authorized to execute the agreement on behalf of the City.

Section 3. Effective date.

This resolution shall take effect immediately upon adoption.

DULY PASSED AND ENACTED by the Council of the City of Sanibel, Lee County, Florida, this 20th day of January, 1998.

AUTHENTICATION:

Wallace M. Kain
Mayor

Gary L. Price
City Clerk

APPROVED AS TO FORM: _____
City Attorney

_____
Date

Vote of Councilmembers:

Davison	aye
Janes	aye
Kain	aye
Madison	aye
Reding	aye

Date filed with City Clerk: JAN 21 1998

RES-Kurtis-Contract.bkb

9

AGREEMENT FOR PROFESSIONAL CONSULTING SERVICES

THIS AGREEMENT, made and entered into effective January 22nd, 1998, by and between the City of Sanibel, Florida, 800 Dunlop Road, Sanibel, Florida 33957 (the City), and Kurtis and Asssociates P.C., Suite 600, 2000 M Street N.W., Washington D.C. 20036 (the Consultant),

WITNESS:

WHEREAS, the City desires to retain the services of the Consultant in connection with various matters pertaining to telecommunications; and

WHEREAS, Consultant is experienced and skilled in such matters; and

WHEREAS, the City has solicited and received proposals to render professional consulting services in the field of telecommunications, has reviewed proposals received and has determined that Consultant is the top-ranked firm for the particular needs of the City for such services; and

WHEREAS, the parties desire to enter into an agreement setting forth their mutual understandings and covenants,

NOW, THEREFORE, in consideration of these premises, the City and the Consultant agree as follows:

1. The City, jointly through its City Manager and City Attorney, engages the Consultant to provide the services set forth in this agreement. The Consultant agrees to render the consulting services set forth in this agreement, as requested and in a timely, professional and competent manner.

2. The services to be rendered under this agreement are those more fully set forth in the Scope of Services Exhibit A, (attached and incorporated), and the tasks authorized or requested by the City in writing pursuant to the Scope of Services. The initial services are stated more particularly in the Initial Services/Timetable contained in Exhibit A-1 (attached and incorporated).

CITY OF SANIBEL
CONTRACT NO. 98-01-06

3. Michael Kurtis will be the person responsible for overall performance by Consultant and will personally prepare or review all final documents, unless otherwise approved by the City. Other legal and engineering staff may perform services on these matters. The names of contact persons for legal issues and for engineering issues are set forth in Exhibit B, (attached and incorporated).

4. The contact persons for the City are Robert D. Pritt, City Attorney, with respect to primarily legal matters and Bruce A. Rogers, Planning Director, with respect to primarily planning, engineering and technical matters.

5. The schedule of estimated fees for the services provided under this agreement, and the billing rates for services are set forth in Exhibit C, attached.

6. The Consultant will send a billing not more often than monthly, nor less often than quarterly, showing the correct amount of time for each person who renders billable services, the hourly rate and the amount of fees for the services. Regular clerical services are deemed to be overhead and not billable. The billing will also itemize the expenses. The City will pay, upon correct billings, at its next billing cycle, not to exceed 45 days.

7. The City is a local governmental entity, funded by taxes. Accordingly, the Consultant agrees to endeavor to employ cost-saving measures, including the use of the City's offices and personnel where practicable, use of legal and engineering assistants, and similar cost-saving devices.

8. For the duration of this agreement the Consultant will not accept or represent clients in matters adverse to the City without prior authorization.

9. This agreement is terminable by either party upon 30 days written notice by one to the other. As long as the Consultant is not in breach of this agreement, the City will pay the Consultant for all services rendered to the date of the receipt of the notice of termination. The Consultant will not terminate the agreement at such a time or in such a manner that the rights of the City in any proceeding will be prejudiced.

10. This agreement will terminate 3 years from its effective date, unless extended by mutual agreement and action of the City's city council.

11. This agreement is governed by the laws of the State of Florida.

12. If a dispute arises over any aspect of this agreement, including without limitation, services or fees, and the dispute cannot be resolved within 60 days after it arises, the parties agree to attempt to resolve it through mediation. If it cannot be resolved through mediation within 60 days after submission, the parties agree to submit the dispute to arbitration, pursuant to the Florida Arbitration Code.

IN WITNESS WHEREOF, the parties have signed this agreement as of the date and year written above.

CITY OF SANIBEL

By: _____
Gary A. Price, City Manager

_____
Robert D. Pritt, City Attorney

KURTIS & ASSOCIATES, P.C.

By: _____
Michael K. Kurtis, President

Exhibit A
Scope of Services

All tasks or portions of tasks will be performed by Consultant f and when requested in writing by one of the City's contact ersons.

I. **Provide technical advice and assistance concerning telecommunications.**

Task 1. Audit City's compliance with the Telecommunications Act of 1996, other related federal acts, FCC regulations, and other federal and state law. Assist City in complying with all laws or regulations while providing for regulations designed to maintain the goals of the City.

Methodology:

1. Review City's comprehensive plan, land development code, zoning maps and related ordinances and procedures. This review should focus on all types of antennas including satellite dishes, earth stations, cellular towers, microwave towers, and personal wireless service facilities. The review will be both a legal review and a technical engineering review.

2. Advise as to changes necessary or advisable for compliance and to accomplish the City's goals.

3. Assist in drafting appropriate amendments to City's regulations. This will entail drafting, redrafting of standards for antennas and towers, through amendment of the Sanibel Land Development Code.

4. Attend and participate in a workshop meeting in Sanibel with telecommunications providers to learn their needs and to discuss possible regulations, with a focus on tower placement and related regulations.

5. Attend planning commission and city council public hearings as requested.

6. Confer with City staff and council members (as to Council members, individually and separately, or at public meeting in conformance with the Florida Government-in-the-Sunshine law, if and as requested) to provide advice as to the various alternatives.

7. Be available to testify in court as to issues related to the above.

8. Perform services related to the above.

Task 2. Review and advise as to feasibility of using and/or leasing tower or antenna space on city owned facilities, or other public facilities.

Methodology:

1. Review existing and potential locations where towers would be the least inconsistent with current uses or facilities.

2. Advise as to potential arrangements for use or lease of facilities.

3. Review City's current police antennas, tower location and tower facility for feasibility as to potential enhancement and use as a collocation site.

4. Assist in negotiation and drafting of any leases or other arrangements with telecommunications providers or tower builders.

5. Perform services related to the above.

Task 3. Conduct Review of Applications and Proposals

Methodology:

1. Conduct technical review applications and proposals for telecommunications facilities, including antennas, towers and related facilities for compliance with regulations. The review will be both a legal review and an engineering review.

2. Advise staff orally and/or in writing as to all issues related to an application or proposal.

3. Be available to testify at planning commission hearing, city council hearing or in court as to issues related to the above.

4. Perform services related to the above.

Task 4. Conduct Review of cable communications franchise and City regulatory scheme. (Note: Consultant does not hold itself out to be an expert in all phases of cable franchising. If an assignment under this task is not within Consultant's area of expertise, Consultant will so advise the City.)

Methodology:

1. Conduct a legal review of the existing franchise and regulatory scheme.

2. Advise whether it is worthwhile for the City to continue to regulate under the current FCC regulatory scheme.

3. Advise as to whether the City is maximizing its abilities concerning regulation or whether there are other thing that the City may do to improve the effectiveness of its regulatory powers.

4. Advise as to franchise renewal procedures and requirements when franchise pre-renewal time requirements occur.

5. Assist in public right-of-way issues.

6. Provide services related to the above.

:. Provide technical assistance concerning various matters related to telecommunications, franchising and right-of-way usage as they may occur, to the extent the assigned task is within the areas of expertise of Consultant.

Task 1. Provide assistance concerning all use of public rights-of-way, to assure maximization of return without risk of discriminatory treatment.

Task 2. Provide advice concerning telecommunications taxation if the adopted public service tax on telecommunications is implemented, to the extent that a conflict is not raised.

Task 3. Provide assistance and advice concerning amateur radio and commercial radio (AM/FM) antennas, towers and facilities.

Task 4. Provide assistance and advice concerning other antennas, towers and facilities.

[I. Provide representation or assistance in matters before the FCC if necessary and if not disqualified.

EXHIBIT A-1
INITIAL SERVICES/TIMETABLE
BETWEEN CITY OF SANIBEL AND KURTIS AND ASSOCIATES, P.C.

Objective

Prepare a City ordinance which puts into place City regulations that provide opportunities for the provision of a full range of quality telecommunications services with the absolute minimum visual intrusion on existing views and vistas, and in a manner that gives the City maximum regulatory control consistent with applicable laws, rules and regulations.

1. January 8, 1998:

   Bruce Rogers and Bob Pritt visit Washington D.C. offices of Kurtis and Associates for purpose of completing proposed contract.

   City delivers to Kurtis and Associates any available information which may be useful, including City map and photos of existing telecommunication towers (identifying owners and users of towers). The City also delivers a copy of draft ordinance CA754.

2. After January 8th, but prior to Kurtis and Associates visit to Sanibel:

   City sends to Kurtis and Associates any additional, available material which may be useful. Kurtis and Associates sends to City any available material which aids in the City's understanding of the relevant issues.

3. January 20, 1998:

   Proposed contract between the City and Kurtis and Associates taken to Council for approval.

   If Council approves the contract, then . . .

4. Late January/early February, 1998 (tentative January 29th):

   Kurtis and Associates visit Sanibel to get acquainted with area.

   City staff and Kurtis and Associates hold a workshop meeting, inviting all telecommunication service providers to learn what they say their needs are. Possible regulations are discussed with providers to get their reaction and ideas.

City staff will have made prior arrangements concerning date, time and place of the workshop, attempting to get representative attendance from all service providers.

City staff meets with Kurtis and Associates to discuss results of workshop and to get a better understanding of the legal and technical issues associated with the regulation of the provision of telecommunication services.

Kurtis and Associates reviews the pending application for a new tower to be constructed by Sprint United Telephone, and provide the City with technical and legal advice on the review of this application.

Kurtis and Associates provides the same review on any other similar applications that may be filed prior to Kurtis and Associates' visit to Sanibel.

5. February 13, 1998:

City staff completes draft of an ordinance for review by Kurtis and Associates. (During the drafting of this ordinance it is anticipated there will be numerous phone calls and faxes exchanged between the City and Kurtis and Associates.)

6. February 27, 1998:

Kurtis and Associates sends to the City its critique, comments and suggestions on the City-drafted ordinance. Kurtis and Associates is to provide both legal and technical (RF engineering) review of the draft ordinance.

7. March 3, 1998:

City staff revises draft ordinance and sends revised ordinance to Kurtis and Associates for further review.

City schedules Planning Commission hearing for March 24, 1998. (Ordinance title cannot be changed after this date.)

8. March 6, 1998:

Kurtis and Associates provides technical and legal review of revised ordinance.

9. March 24, 1998:

Kurtis and Associates attend Planning Commission hearing. Kurtis and Associates makes a presentation to the Planning

Commission on telecommunications issues and with City staff presents the proposed ordinance. Kurtis and Associates is available for questions.

10. April 14, 1998:

    Planning Commission adopts resolution for the proposed telecommunications ordinance (takes its final action) and sends its recommendations to the City Council.

11. April 21, 1998:

    City Council holds first reading (not a public hearing) on proposed ordinance.

12. May 5, 1998:

    City Council holds second reading and public hearing on proposed ordinance. Kurtis and Associates makes presentation to City Council and is available for questions. City Council takes action on the proposed ordinance. Ordinance becomes effective upon adoption.

Additional Services:

Kurtis and Associates will provide legal and technical review assistance on telecommunication-related applications and services. Anticipate this review to be done over the phone/by fax and by U.S. mail.

Exhibit B

Contact Individuals

:gal Issues:

Michael K. Kurtis
Jeanne W. Stockman

ıgineering Issues:

Herbert C. Harris
Leonard M. Garavalia

ıe address and telephone numbers for all contacts is:

Kurtis & Associates, P.C.
2000 M Street, N.W. Suite 600
Washington, D.C. 20036

(202) 328-4500 office
(202) 328-1231 facsimile

Exhibit C

Schedule of Fees

As professional fees, Consultant would bill the City for the actual time devoted to these matters (based on the firm's hourly rates, as described below). In addition, out-of-pocket expenses incurred by Consultant in performing its services, would be billed to the City separate and apart from the professional fees.

Consultant's professional staff comprises partner and associate attorneys, engineers, paralegals, law clerks and engineering assistants. Hourly billing rates, depending upon an individual's experience and expertise, are as follows: attorneys and engineers $125 - $260; paralegals, engineering assistants and law clerks $55 - 85. As a matter of firm policy, Consultant strives to utilize an optimum combination of its professional staff to ensure that the highest level of representation will be provided to your firm, while limiting the professional fees incurred.

The hourly billing rates for the contact individuals set forth in Exhibit "B" are as follows:

Michael K. Kurtis	$260.00
Jeanne W. Stockman	$170.00
Herbert C. Harris	$195.00
Leonard M. Garavalia	$180.00

Consultant will invoice the City for the services of its professional staff in minimum quarter hour increments, based on actual hours devoted to its representation. Out-of-pocket expenses incurred, which will be itemized separately on each invoice, include (but are not limited to) such items as: travel costs; postage; long distance charges; telecopier expense; photocopying; courier service (including overnight couriers); and support staff overtime.

For invoices payments postmarked within 15 days of the date of invoice, the City may deduct 5% from the professional fees. Expenses set forth on the invoice are not subject to this discount.

Consultant estimates the total professional fees for the scope of work as set forth in the "Initial Services/Timetable Between City of Sanibel and Kurtis & Associates, P.C." (Exhibit A-1), to be twenty thousand dollars ($20,000). Actual out-of-pocket expenses will be billed in addition to these fees. While this represents a good faith estimate of the fees associated with this scope of work, actual fees will be charged based upon actual time spent, as set forth above. For purposes of the initial "visit to Sanibel to get acquainted with area". Consultant will send four individuals and the hourly rates associated with those four individuals will be discounted by 50% for the time associated with "get acquainted with Sanibel" portion of the project. Actual out of pocket expenses would not be subject to this discount.

MINUTES FOR NOVEMBER 24, 1998
MEETING OF THE PLANNING COMMISSION
COUNCIL CHAMBERS (MACKENZIE HALL)
800 DUNLOP ROAD, SANIBEL, FLORIDA 33957

Chairman Veenschoten called the meeting to order at 9:00 a.m. Present were Vice Chairman Downes, Commissioner Bogen, Commissioner Greenstein, Commissioner Harrity, and Commissioner Slayton. Commissioner Nola Theiss was not present due to resignation upon her election to City Council. Also present were Planning Commission Attorney Beverly Grady, Planning Director Bruce Rogers, and Assistant Planning Director Ken Pfalzer. There were 4 members of the public present at the opening of the meeting.

ITEM #1: Approval of Minutes of regular meeting of November 10, 1998, with continuation to November 12, 1998; and Special Causeway Workshop Meeting of November 12, 1998.

Discussion ensued regarding amendments to the 3 sets of Minutes after which the following motion was made:

MOTION: Commissioner Bogen moved that the Minutes of November 10, 1998 with continuation to November 12, 1998 be approved as amended on the record. Vice Chairman Downes seconded the motion which carried unanimously.

MOTION: Commissioner Slayton moved that the Minutes of November 12, 1998 Causeway Workshop No. 6 be approved as amended on the record. Vice Chairman Downes seconded the motion which carried unanimously.

ITEM #2: Public Comments: There was no public comment.

ITEM #3: Adoption of Resolutions.

Consideration of an ordinance relating to telecommunications; amending subsection I.B.2.c. of the Land Development Code of the City of Sanibel to delete the definition of earth station amending Subsection I.C.1.c. by adding an overlay district map establishing permitted use districts for telecommunications devices; amending Section I.E.10., Height Exceptions, amending Section I.E.32. to reflect changes made necessary by the Telecommunications Act of 1996; providing regulations on telecommunications devices; amending Section III.C.2. to provide variance standards for telecommunications devices; amending Section VII.B.2. to establish application fees for telecommunications devices; providing for codification; providing for conflict and severance; and providing an effective date. Submitted by the City of Sanibel. Application No. 97-195 LDC. This hearing is closed by Planning Commission motion of November 10, 1998.

Mr. Rogers read the item title. Attorney Grady cited the legal considerations. Discussion ensued.

MOTION: Vice Chairman Downes moved to adopt the draft resolution approving Application No. 97-195 LDC. Commissioner Bogen seconded the motion.

Discussion ensued regarding the effect of tower lighting on wildlife. Vice Chairman Downes and Commissioner Bogen both agreed upon the following amended motion:

AMENDED MOTION: Vice Chairman Downes moved to adopt the draft resolution approving Application No. 97-195 LDC with the suggested amendment to Condition No. 4. Commissioner Bogen seconded the motion which passed 6-0.

Item 12e: Approval of A RESOLUTION DETERMINING TO HOLD TELECOMMUNICATIONS HEARINGS BEFORE 5:00 P.M. AND SETTING TIME, DATE AND PLACE; AND PROVIDING AN EFFECTIVE DATE.

City Manager Price read the title. **The resolution was approved by unanimous vote.**

The Mayor then read into the record a letter from Robert Ervien, Ingrid and Jim Martin, and Kenneth Monahan requesting that Council place a very high priority on a beach erosion control project for the Gulf Shores, Gulf Pines, and West Gulf Drive areas, and also that Council adopt a time schedule proposed as Exhibit 1.

As an additional item, Mayor Janes advised that he had asked the City Attorney to prepare a resolution appointing City Attorney Pritt as the Interim City Manager. City Manager Price read into the record **A RESOLUTION APPOINTING ROBERT D. PRITT AS CITY MANAGER OF THE CITY OF SANIBEL; PROVIDING THAT THE APPOINTMENT IS A TEMPORARY APPOINTMENT; CONFERRING UPON THE APPOINTEE ALL POWERS OF A CITY MANAGER; PROVIDING TERMS; PROVIDING FOR SERVICES OF CITY ATTORNEY; AND PROVIDING AN EFFECTIVE DATE.**

Mayor Janes explained Mr. Pritt would be handling both jobs. City Attorney Pritt reviewed the provisions of the resolution, to be effective January 4, 1999. Councilman Madison expressed some concern that the item was not advertised and there were no members of the public present at this late hour, but it was explained it was not a public hearing matter and no public notice was required. **Upon a motion by Councilman Reding, seconded by Councilmember Theiss, the resolution was approved by unanimous vote.** Mayor Janes added, and Council agreed, that there would be no problem with City Manager Price taking whatever administrative leave he needs in December.

Item 14: Public Comments

Dick Downes, speaking as a citizen of Sanibel, expressed concerns that complicated items like sewer issues are sometimes scheduled too late on the agenda to be given proper consideration. He recommended that issues concerning an important project like the sewer system be scheduled either in the morning or at a separate workshop, to ensure a full hearing.

Dick Walsh and Ray Grizzell both spoke on sewer issues, specifically the possibility of a moratorium on sewer connections; City Attorney Pritt advised he hopes to have more information on this issue at the next meeting.

Item 15: Councilmembers' Comments – There were none.

There was no further business and the meeting was adjourned at 6:30 p.m.

Respectfully submitted,

Robert D Pritt

Robert D. Pritt
City Manager

CITY OF SANIBEL

RESOLUTION NO. 98 - 250

A RESOLUTION ELECTING TO CONDUCT A PUBLIC HEARING ON A PROPOSED ORDINANCE RELATING TO TELECOMMUNICATIONS PRIOR TO 5:00 P.M.; ESTABLISHING A DATE AND TIME FOR THE FIRST READING AND PUBLIC HEARING; AND PROVIDING AN EFFECTIVE DATE.

WHEREAS, the City Council is considering a proposed ordinance relating to telecommunications within the City; and

WHEREAS, the proposed ordinance is currently titled:

> "AN ORDINANCE RELATING TO TELECOMMUNICATIONS; AMENDING SUBSECTION I.B.2.c. OF THE LAND DEVELOPMENT CODE OF THE CITY OF SANIBEL TO DELETE THE DEFINITION OF "EARTH STATION"; AMENDING SUBSECTION I.C.1.c. BY ADDING AN OVERLAY DISTRICT MAP ESTABLISHING PERMITTED USE DISTRICTS FOR TELECOMMUNICATIONS DEVICES; AMENDING SECTION I.E.10., HEIGHT EXCEPTIONS, OF THE LAND DEVELOPMENT CODE; AMENDING SECTION I.E.32. TO REFLECT CHANGES MADE NECESSARY BY THE TELECOMMUNICATIONS ACT OF 1996; PROVIDING REGULATIONS ON TELECOMMUNICATIONS DEVICES; AMENDING SECTION III.C.2. TO PROVIDE VARIANCE STANDARDS FOR TELECOMMUNICATIONS DEVICES; AMENDING SECTION VII.B.2. TO ESTABLISH APPLICATION FEES FOR TELECOMMUNICATIONS DEVICES; PROVIDING FOR CODIFICATION; PROVIDING FOR CONFLICT AND SEVERANCE; AND PROVIDING AN EFFECTIVE DATE."

and

WHEREAS, pursuant to Section 166.041(3)(c)2.a., Florida Statutes, the Council may, by a majority plus one, elect to conduct the hearings at a time other than after 5:00 P.M. on a weekday;

NOW, THEREFORE, BE IT RESOLVED by the City Council of the City of Sanibel, Lee County, Florida:

Section 1. The City Council hereby elects to conduct the public hearings on the following proposed ordinance prior to 5:00 P.M.:

"AN ORDINANCE RELATING TO TELECOMMUNICATIONS; AMENDING SUBSECTION I.B.2.c. OF THE LAND DEVELOPMENT CODE OF THE CITY OF SANIBEL TO DELETE THE DEFINITION OF "EARTH STATION"; AMENDING SUBSECTION I.C.1.c. BY ADDING AN OVERLAY DISTRICT MAP ESTABLISHING PERMITTED USE DISTRICTS FOR TELECOMMUNICATIONS DEVICES; AMENDING SECTION I.E.10., HEIGHT EXCEPTIONS, OF THE LAND DEVELOPMENT CODE; AMENDING SECTION I.E.32. TO REFLECT CHANGES MADE NECESSARY BY THE TELECOMMUNICATIONS ACT OF 1996; PROVIDING REGULATIONS ON TELECOMMUNICATIONS DEVICES; AMENDING SECTION III.C.2. TO PROVIDE VARIANCE STANDARDS FOR TELECOMMUNICATIONS DEVICES; AMENDING SECTION VII.B.2. TO ESTABLISH APPLICATION FEES FOR TELECOMMUNICATIONS DEVICES; PROVIDING FOR CODIFICATION; PROVIDING FOR CONFLICT AND SEVERANCE; AND PROVIDING AN EFFECTIVE DATE."

Section 2. The date, time and place for the first reading and first public hearing on the ordinance shall be January 5, 1999 at 10:00 A.M. in the City Council Chambers (MacKenzie Hall), 800 Dunlop Road, Sanibel, Florida. The date, time and place for all readings and public hearings shall be advertised according to law.

Section 3. Effective date.

This resolution shall take effect immediately upon adoption.

DULY PASSED AND ENACTED by the Council of the City of Sanibel, Lee County, ~~Florida,~~ this 1st day of December, 1998.

AUTHENTICATION: _____ _____
Mayor City Clerk

APPROVED AS TO FORM: Richard D Pratt 11/25/98
City Attorney Date

Vote of Council members:

Brown	aye
Janes	aye
Madison	aye
Reding	aye
Theiss	aye

Date filed with City Clerk: DEC - 2 1998

RES-TELECOM-BEFORE5.ORDS21

Item 12e: Approval of A RESOLUTION DETERMINING TO HOLD TELECOMMUNICATIONS HEARINGS BEFORE 5:00 P.M. AND SETTING TIME, DATE AND PLACE; AND PROVIDING AN EFFECTIVE DATE.

City Manager Price read the title. **The resolution was approved by unanimous vote.**

The Mayor then read into the record a letter from Robert Ervien, Ingrid and Jim Martin, and Kenneth Monahan requesting that Council place a very high priority on a beach erosion control project for the Gulf Shores, Gulf Pines, and West Gulf Drive areas, and also that Council adopt a time schedule proposed as Exhibit 1.

As an additional item, Mayor Janes advised that he had asked the City Attorney to prepare a resolution appointing City Attorney Pritt as the Interim City Manager. City Manager Price read into the record **A RESOLUTION APPOINTING ROBERT D. PRITT AS CITY MANAGER OF THE CITY OF SANIBEL; PROVIDING THAT THE APPOINTMENT IS A TEMPORARY APPOINTMENT; CONFERRING UPON THE APPOINTEE ALL POWERS OF A CITY MANAGER; PROVIDING TERMS; PROVIDING FOR SERVICES OF CITY ATTORNEY; AND PROVIDING AN EFFECTIVE DATE.**

Mayor Janes explained Mr. Pritt would be handling both jobs. City Attorney Pritt reviewed the provisions of the resolution, to be effective January 4, 1999. Councilman Madison expressed some concern that the item was not advertised and there were no members of the public present at this late hour, but it was explained it was not a public hearing matter and no public notice was required. **Upon a motion by Councilman Reding, seconded by Councilmember Theiss, the resolution was approved by unanimous vote.** Mayor Janes added, and Council agreed, that there would be no problem with City Manager Price taking whatever administrative leave he needs in December.

Item 14: Public Comments

Dick Downes, speaking as a citizen of Sanibel, expressed concerns that complicated items like sewer issues are sometimes scheduled too late on the agenda to be given proper consideration. He recommended that issues concerning an important project like the sewer system be scheduled either in the morning or at a separate workshop, to ensure a full hearing.

Dick Walsh and Ray Grizzell both spoke on sewer issues, specifically the possibility of a moratorium on sewer connections; City Attorney Pritt advised he hopes to have more information on this issue at the next meeting.

Item 15: Councilmembers' Comments – There were none.

There was no further business and the meeting was adjourned at 6:30 p.m.

Respectfully submitted,

Robert D Pritt

Robert D. Pritt
City Manager

CITY OF SANIBEL

RESOLUTION NO. 98 - 250

A RESOLUTION ELECTING TO CONDUCT A PUBLIC HEARING ON A PROPOSED ORDINANCE RELATING TO TELECOMMUNICATIONS PRIOR TO 5:00 P.M.; ESTABLISHING A DATE AND TIME FOR THE FIRST READING AND PUBLIC HEARING; AND PROVIDING AN EFFECTIVE DATE.

WHEREAS, the City Council is considering a proposed ordinance relating to telecommunications within the City; and

WHEREAS, the proposed ordinance is currently titled:

> "AN ORDINANCE RELATING TO TELECOMMUNICATIONS; AMENDING SUBSECTION I.B.2.c. OF THE LAND DEVELOPMENT CODE OF THE CITY OF SANIBEL TO DELETE THE DEFINITION OF "EARTH STATION"; AMENDING SUBSECTION I.C.1.c. BY ADDING AN OVERLAY DISTRICT MAP ESTABLISHING PERMITTED USE DISTRICTS FOR TELECOMMUNICATIONS DEVICES; AMENDING SECTION I.E.10., HEIGHT EXCEPTIONS, OF THE LAND DEVELOPMENT CODE; AMENDING SECTION I.E.32. TO REFLECT CHANGES MADE NECESSARY BY THE TELECOMMUNICATIONS ACT OF 1996; PROVIDING REGULATIONS ON TELECOMMUNICATIONS DEVICES; AMENDING SECTION III.C.2. TO PROVIDE VARIANCE STANDARDS FOR TELECOMMUNICATIONS DEVICES; AMENDING SECTION VII.B.2. TO ESTABLISH APPLICATION FEES FOR TELECOMMUNICATIONS DEVICES; PROVIDING FOR CODIFICATION; PROVIDING FOR CONFLICT AND SEVERANCE; AND PROVIDING AN EFFECTIVE DATE."

and

WHEREAS, pursuant to Section 166.041(3)(c)2.a., Florida Statutes, the Council may, by a majority plus one, elect to conduct the hearings at a time other than after 5:00 P.M. on a weekday;

NOW, THEREFORE, BE IT RESOLVED by the City Council of the City of Sanibel, Lee County, Florida:

Section 1. The City Council hereby elects to conduct the public hearings on the following proposed ordinance prior to 5:00 P.M.:

"AN ORDINANCE RELATING TO TELECOMMUNICATIONS; AMENDING SUBSECTION I.B.2.c. OF THE LAND DEVELOPMENT CODE OF THE CITY OF SANIBEL TO DELETE THE DEFINITION OF "EARTH STATION"; AMENDING SUBSECTION I.C.1.c. BY ADDING AN OVERLAY DISTRICT MAP ESTABLISHING PERMITTED USE DISTRICTS FOR TELECOMMUNICATIONS DEVICES; AMENDING SECTION I.E.10., HEIGHT EXCEPTIONS, OF THE LAND DEVELOPMENT CODE; AMENDING SECTION I.E.32. TO REFLECT CHANGES MADE NECESSARY BY THE TELECOMMUNICATIONS ACT OF 1996; PROVIDING REGULATIONS ON TELECOMMUNICATIONS DEVICES; AMENDING SECTION III.C.2. TO PROVIDE VARIANCE STANDARDS FOR TELECOMMUNICATIONS DEVICES; AMENDING SECTION VII.B.2. TO ESTABLISH APPLICATION FEES FOR TELECOMMUNICATIONS DEVICES; PROVIDING FOR CODIFICATION; PROVIDING FOR CONFLICT AND SEVERANCE; AND PROVIDING AN EFFECTIVE DATE."

Section 2. The date, time and place for the first reading and first public hearing on the ordinance shall be January 5, 1999 at 10:00 A.M. in the City Council Chambers (MacKenzie Hall), 800 Dunlop Road, Sanibel, Florida. The date, time and place for all readings and public hearings shall be advertised according to law.

Section 3. Effective date.

This resolution shall take effect immediately upon adoption.

DULY PASSED AND ENACTED by the Council of the City of Sanibel, Lee County, ~~Florida,~~ this 1st day of December, 1998.

AUTHENTICATION: _____ _____
Mayor City Clerk

APPROVED AS TO FORM: _____ 11/25/98
City Attorney Date

Vote of Council members:

Brown	aye
Janes	aye
Madison	aye
Reding	aye
Theiss	aye

Date filed with City Clerk: DEC - 2 1998

RES-TELECOM-BEFORE5.ORDS21

renourishment and scenic land preservation acquisition effects on the budget. He stated the Committee had no intentions of dealing with the staff and wage plan, but did suggest the inflation rate for pay increases be reduced to 2%. Assumptions for five-year budget projections were attached as Exhibit A.

Vice Mayor Reding supported Committee review of the pension plan because it has a significant effect on the budget. As to organizational restructure, there was general agreement the Committee would not deal with personnel issues or reorganization, that this should be left to the new City Manager. Chairman Ball pointed out the Committee does need to have basic salary figures to plug into assumptions for a five-year projection. There was further discussion of the proposed review of the pension plan. Councilmembers Reding and Theiss said they would like to have the Committee's expertise with regard to costs of converting to a defined pension plan. Following further discussion, there was general agreement to the charge as proposed in the resolution, including review of the pension program and 2% for inflation. **Vice Mayor Reding moved approval of the resolution, including Assumptions. Councilmember Brown seconded.** Mayor Janes called for public comment. Louise Johnson cautioned Council to balance the refilling of positions with the fact that the public is used to good service. **The motion to approve passed by unanimous vote.**

Item 7: First Reading and Public Hearing of AN ORDINANCE RELATING TO TELECOMMUNICATIONS; AMENDING SUBSECTION I.B.2.c. OF THE LAND DEVELOPMENT CODE OF THE CITY OF SANIBEL TO DELETE THIS DEFINITION OF EARTH STATION; AMENDING SUBSECTION I.C.1.c. BY ADDING AN OVERLAY DISTRICT MAP ESTABLISHING PERMITTED USE DISTRICTS FOR TELECOMMUNICATIONS DEVICES; AMENDING SECTION I.E.10., HEIGHT EXCEPTIONS, OF THE LAND DEVELOPMENT CODE; AMENDING SECTION I.E.32 TO REFLECT CHANGES MADE NECESSARY BY THE TELECOMMUNICATIONS ACT OF 1996; PROVIDING REGULATIONS ON TELECOMMUNICATIONS DEVICES; AMENDING SECTION III.C.2. TO PROVIDE VARIANCE STANDARDS FOR TELECOMMUNICATIONS DEVICES; AMENDING SECTION VII.B.2. TO, VII.B.3., VII.B.6. AND VII.D.3. TO ESTABLISH APPLICATION FEES FOR TELECOMMUNICATIONS DEVICES; PROVIDING FOR CODIFICATION; PROVIDING FOR CONFLICT AND SEVERANCE; AND PROVIDING AN EFFECTIVE DATE.

City Manager Pritt read the title. He explained the ordinance has been through the Planning Commission process and includes some recommendations, and also that it requires two complete public hearings. It has been duly advertised, and, as an extra measure, notices have been sent to areas that might be specifically affected.

Planning Director Bruce Rogers introduced Michael Kurtis, President of Kurtis and Associates, P C., the City's telecommunications consultant hired to assist in bringing City ordinances into compliance with the Telecommunications Act of 1996. Mr. Kurtis explained the 1996 Act provides that local governments maintain zoning rights but they cannot preclude or act to preclude the ability of a provider to provide service. The ordinance also cannot discriminate in favor of one carrier or class of carrier. He said that to date no ordinance banning the towers has been successful. Mr. Kurtis began a detailed overhead presentation including review of different types of structures (guyed tower, self-supporting steel lattice tower and monopole) and advantages/disadvantages of each. He pointed out essentially, the ordinance tires to balance issues and concerns the carriers face with the aesthetics of the island and the need to allow the service.

Vice Mayor Reding pointed out that Sanibel is a bird flyway and asked if there was any technical impediment to locating towers outside the flyway, in the Punta Rassa area, for example. Mr. Kurtis responded that the water and all the vegetation and trees on Sanibel would make the signal virtually unusable. He explained the preference for wireless phones dramatically increases the level of service needed. Mr. Kurtis provided more details on his recommendation for three towers, and explained that to provide solid service in cars and residences, he would balance the need for multiple sites with bringing the heights of multiple sites down. Although some Councilmembers weren't convinced of the need, and suggested that service currently provided was adequate, Mr. Kurtis said he didn't think Sanibel residents would be satisfied with a level of service less than that of other communities.

Planning Director Bruce Rogers reviewed the highlights of the ordinance. He noted the WHEREAS clauses set the tone. He reviewed Purposes and Intent, Applicability, and Permitted Uses (either accessory or principal use) and distributed a Telecommunications Districts Map to explain what is permitted at what location, including: Primary Intended Uses, Conditional Uses and Prohibited Uses. Director Rogers provided additional details on how districts were determined. He pointed out that both physical and visual impacts were taken into consideration. Collocation (sharing of telecommunications devices) possibilities incentives, permitting procedures (height requirements) and application requirements were reviewed and explained.

Sanibel Natural Resources Director Rob Loflin reported on the bad effect the towers have on birds, specifically the lighting which confuses them during migration. He also pointed out the higher the tower the more damage it will do; he recommending focusing on collocation and heights no higher than in the proposed ordinance. Director Loflin said guy wires should be prohibited completely and that every new tower should require a full public hearing before the Planning Commission. Mayor Janes called for public comment.

Janet Walker, 538 Lake Murex Circle, read into the record a statement of her objections to the ordinance, which she alleged accommodates Sprint and does not protect Sanibel. She reported on research regarding how other governments are dealing with the Telecommunications Act, including several that are not allowing towers, including Martha's Vineyard; Cape Cod; Carmel by the Sea, CA; Hilton Head Island, NC, and Boca Grande. She said some communities have placed a moratorium on towers pending stricter review. She concluded the proposed amendment was faulty and flawed and strongly urged that it be sent back to the drawing board.
Louise Johnson recommended a long-term permit for any tower over 65', no lighting and no guy wires. She pointed out that Sanibel, as a sanctuary island, is different than other places and that she was happy to hear of the challenges in other cities.
Degnan Walker added his objections, explaining how the ordinance would benefit Sprint, arguing that the necessary service is already available and suggesting the City's planners were giving into the Federal government and should pay more attention to the Vision Statement. He urged staff and Council to research how other governments are addressing the Telecommunications Act.
Charlie Morrison, Lee County. Mosquito Control, addressed lighting requirement, calling attention to the threat to public safety with no lighting and recommending any towers 150' and over be lighted.
Henry Glissman suggested the City could beat Sprint the same way they had MacDonald's.
Rudy Krukar noted the need to address medical impacts from microwave towers.

At the request of Councilmembers Madison and Brown, Mr. Kurtis responded to Mrs. Walker's comments. He said some cities like Hilton Head have avoided adding towers by using structures already available; some like Martha's Vineyard are attempting to restrict them; and Cape Cod has set up a review board. He advised the City is precluded from addressing the medical issue since the FCC is responsible for establishing guidelines. He pointed out the ordinance requires certification and demonstration of compliance. Mr. Kurtis also explained the concept of steering carriers to less objectionable locations, and said that towers not being used will be dismantled.

Following further Council discussion, Councilman Madison requested that all recent decisions regarding challenges to the Telecommunications Act be researched. Councilmember Theiss requested more information on what options are available, and Mayor Janes agreed questions and objections raised, especially by the Walkers, should be answered.

Planning Director Rogers clarified that, based on today's hearing, staff would not make any changes to the ordinance itself. Vice Mayor Reding pointed out, for the public, that subsequent public hearings will involve motions and discussion for amendments to the ordinance. He indicated his desire to get concrete and reliable answers to questions raised. As to the best way to determine how other cities are dealing with the Telecommunications Act, it was suggested the Planning Director could contact them by phone.

Mayor Janes declared a First Reading, Second Reading to be January 19, 1999 at 10:00 a.m.

Item 9: Second Reading and Public Hearing of AN ORDINANCE RELATING TO TELECOMMUNICATIONS; AMENDING SUBSECTION I.B.2.c. OF THE LAND DEVELOPMENT CODE OF THE CITY OF SANIBEL TO DELETE THIS DEFINITION OF EARTH STATION; AMENDING SUBSECTION I.C.1.c. BY ADDING AN OVERLAY DISTRICT MAP ESTABLISHING PERMITTED USE DISTRICTS FOR TELECOMMUNICATIONS DEVICES; AMENDING SECTION I.E.10., HEIGHT EXCEPTIONS, OF THE LAND DEVELOPMENT CODE; AMENDING SECTION I.E.32 TO REFLECT CHANGES MADE NECESSARY BY THE TELECOMMUNICATIONS ACT OF 1996; PROVIDING REGULATIONS ON TELECOMMUNICATIONS DEVICES; AMENDING SECTION III.C.2. TO PROVIDE VARIANCE STANDARDS FOR TELECOMMUNICATIONS DEVICES; AMENDING SECTION VII.B.2. TO, VII.B.3., VII.B.6. AND VII.D.3. TO ESTABLISH APPLICATION FEES FOR TELECOMMUNICATIONS DEVICES; PROVIDING FOR CODIFICATION; PROVIDING FOR CONFLICT AND SEVERANCE; AND PROVIDING AN EFFECTIVE DATE.

City Manager Pritt explained that legal advertising requirements had been followed. Planning Director Bruce Rogers brought Council up to date from the January 5 hearing, explaining the ordinance is to bring the City into conformance with the Telecommunications Act of 1996 (Act) and, in addition, provide opportunity to locate antennas so residents and visitors have access to the technology. The ordinance sets up a process whereby providers can apply for and meet standards, and install antennas which may or may not involve towers. Basically, it provides that towers are permitted at certain locations as a matter of right, provided all standards can be met; as conditional uses where very strict standards must be met; and not permitted at all in certain other areas, primarily preservation and conservation lands. The ordinance also provides regulations for other devices not subject to the Act--antennas put up by the Fire District, City, service stations, taxi companies, etc.

Council had directed that a list of locations suggested by residents Mr. & Mrs. Walker as successfully challenging the Act be investigated. Michael Kurtis, the City's telecommunications consultant, reviewed court cases brought up by the Walkers, concluding that no bans on towers have been upheld, although some locations were found not be an appropriate use because other properties were available. Director Rogers reported that he had spoken with officials in Martha's Vineyard (which has a by-laws created by the Cape Cod Commission, which do not prohibit towers and are much the same as Sanibel's ordinance; Pacific Grove, California no longer has a moratorium in effect--they have had no applications and no interest; Half Moon Bay had a moratorium in effect for one year--a carrier put an antenna on a city-owned structure, there have been no further requests and no ordinance; Carmel by the Sea has an ordinance that permits towers under certain requirements--providers are building towers in Monterey County; and Hilton Head has tall buildings and towers where antennas can be placed. Director Rogers said he was advised by an experienced attorney that it is not hard to build a tower in Punta Gorda or Charlotte County, and there is certainly no prohibition; Boca Grande, where Sprint wanted a new tower, but when advised that a public hearing was required said they'd repair the existing tower.

Discussion turned to types of structures, with Vice Mayor Reding suggesting Council might want to rule out latticework structures, but noting he had observed an example of a monopole that might be acceptable. Mr. Kurtis pointed out monopoles also become very large as multiple carriers are added, and Director Rogers advised the ordinance requires monopoles unless the antenna requires more lateral rigidity. He also clarified that in any area where towers are permitted as a right, either latticework or monopole towers could be permitted without a public hearing. Director Rogers summarized there are two policy issues before Council: limiting heights which

means each tower primarily serves one provider, and leads to more towers; and when to require public hearings. During discussion of Councilman Davison's suggestion to use the Planning Commission's Summary Disposition was procedure for some applications, Director Rogers pointed out the application would still have to be the same as for a Planning Commission hearing, and that the thrust of the ordinance is to make the application procedure simpler and, as a result, channel applications for towers to a given district.

Vice Mayor Reding requested to hear from Natural Resources Director Rob Loflin, who said his main interest would be that neighbors let the City staff know issues regarding particular sites, such as a bird rookery. He also said he believed that every application should require a public hearing. Mayor Janes called on members of the industry who were present.

Attorney Matt Uhle, on behalf of Sprint; Steven Hartsell, on behalf of Belle South Mobility, and Russell Schropp, Sprint PCS, all urged Council to pass the ordinance as written, especially allowing towers in the green area as a right. They objected to the proposal for public hearings for all towers.

Janet and Degnan Walker spoke in strong opposition to the ordinance, which they believed to be flawed and unacceptable and should be "sent back to the drawing board." Mrs. Degnan suggested the ordinance does not plan for the future, but only accommodates the desires of Sprint. Mr. Walker read a letter into the record describing a new technology that will make tall towers obsolete, and asked why it has not been mentioned. He recommended determining what wireless service is available and asking providers to develop a long-range plan for future needs.

Dale Armstrong objected to only one phone company being available on Sanibel.

Bill Schlackman objected to having a primary site location near his house on Sand Castle Road and recommended finding locations away from high residential concentrations.

Charlie Morrison, Mosquito Control, stated his concerns are for safety of citizens. He said a flashing light would be acceptable, just something that calls attention to the tower from the air. He said Lee County and Ft. Myers have passed ordinances that require lighting over 150', which is what he is requesting from Sanibel.

Back to Council, Councilman Davison pointed out the ordinance specifies preferred areas, and standards; he supported the ordinance as written, but added that he could support a revision to require public hearings for every application. Councilman Brown asked for more clarification and Director Rogers explained further, agreeing with Councilman Brown's conclusion that if the provider's application meets all the standards for the location, in all probability it will be approved. However, the public can have input as to where on the property the tower can be placed. Councilman Brown's point was the public should not come to a hearing thinking they can stop the tower. Councilman Davison believed the standards were well devised and would result in the antennas being placed where they belong.

Director Rogers wished to address the lighting issue, noting the Planning Commission had recommended lighting on some towers. With regard to Charlie Morrison's (Mosquito Control) recommendations, he said he had drafted alternate language: towers 150' or higher above ground will have a single, blinking red light of the type approved by the FAA, with a dark interval longer than lighted, illuminated only during hours when emergency aircraft are

flying in area. There was further discussion with Mr. Morrison as to a schedule for turning the lights on and off, and it was agreed he would work with Director Rogers to coordinate a schedule. **Councilman Davison moved to refer the ordinance back to staff for a rewrite to include the requirement for public hearings on each and every tower, but retaining all standards; and to include language suggested by Director Rogers, including a method to activate lights on and off. Mayor Janes seconded and the motion to amend passed by unanimous vote. Mayor Janes then scheduled a continued reading for February 2, 1999 at 10:00 a.m. in MacKenzie Hall.** The meeting was recessed for lunch at 12:57 p.m. and called back to order at 1:07 p.m..

Item 14: Presentation by Lee County Electric Co-op concerning transmission line and substation replacement and improvements.

Approval of A RESOLUTION DETERMINING THE REQUEST OF THE LEE COUNTY ELECTRIC COOPERATIVE FOR A DETERMINATION THAT ITS PLANS TO REPLACE THE EXISTING 68Kv TRANSMISSION LINE WITH A 138Kv TRANSMISSION LINE FOR 8.9 MILES (3.9 MILES ACROSS OPEN WATER) FROM THE PINE ISLAND SUBSTATION TO THE SANIBEL SUBSTATION AND TO UPGRADE THE SANIBEL SUBSTATION IS CONSISTENT WITH THE SANIBEL PLAN; AND PROVIDING AN EFFECTIVE DATE.

City Manager Pritt read the title, explaining Council needs to determine whether the plan is or is not consistent with the Sanibel Plan. Assistant Planning Director Ken Pfalzer was present for the City. Bill Hetherington of the Co-op was also present, along with engineers John Wiese, Bill Hansen and Dave Wedell. The City Manager noted that efforts to have someone from the Florida Department of Environment Protection (DEP) were not successful. Ken Pfalzer explained that since the last hearing staff has had many discussions with the Co-op's consulting firms, and has received some very satisfactory responses to concerns, which will be presented to Council today.

Bill Hetherington explained the designers and experts would focus on why the Co-op's plan is in conformance with the Sanibel Plan. He reviewed the background of the substation, pointing our problems with the existing facility and noting that Lee County strongly supported the plan to upgrade facilities. Consulting engineer John Weise discussed environmental permitting, cost and maintenance, reliability and repairability and hurricane impacts. He explained the Co-op had started about a year ago working with the U.S. Corps of Engineers and the DEP, the Charlotte Harbor National Estuary Program (CHNEP), the Aquatic Preserve and the Wildlife Refuge. He explained the underground option had been rejected because it was not practical in this particular setting with regard to environmental impacts, and also is not economically feasible.

Bill Hanson, engineer, presented additional information on the pros and cons of four distinct technologies to illustrate further why overhead lines are the preferred option and why underground cables are not practical. He said underground cables are used only when it is impractical to use overhead lines. He explained that underground cables would require excessive right-of-way, and the required dredging which would most likely not be permitted. It would require 60 miles of trenching, construction might result in jet plowing, there is a potential for oil leakage and there would have to be mooring facilities on both sides. The proposed construction would be in existing right-of-way, no dredging is required and there will be fewer structures than with the existing line. The permit has been filed, and approval is expected within the next couple weeks; underground cables would require starting from scratch.

CONSENT AGENDA

Item 10:Items to be pulled for discussion by Council or Staff. - Councilman Brown pulled item 11a.

Item 11: Approval of A RESOLUTION APPROVING AND ADOPTING ITEMS SET FORTH ON THE CITY COUNCIL CONSENT AGENDA; AND PROVIDING AN EFFECTIVE DATE.

Item 11a: Approval of Minutes - January 5, 1999 Meeting

Councilman Brown noted a vote was not recorded for item 11a, decision regarding workshop on advertisement for new City Manager. The vote was noted as 4-1 (Councilman Brown dissenting) and the minutes were approved as amended.

Item 11b: Approval of A RESOLUTION APPROVING THE REVISED TOURIST DEVELOPMENT COUNCIL GRANTS FUND FOR FISCAL YEAR 1998-1999; APPROVING BUDGET AMENDMENT 99-007; AND PROVIDING AN EFFECTIVE DATE. (To appropriate carry-forward grant funds for beach management and environmental restoration)

Item 12: Discussion and consideration of Consent Agenda items pulled. - Item 11a was discussed and approved as amended.

Item 13: City Manager/City Attorney Report
Item 13a: Approval of A RESOLUTION AUTHORIZING THE CITY MANAGER TO PREPARE AND DISTRIBUTE A REQUEST FOR PROPOSAL SOLICITING PROPOSALS FOR THE CONSTRUCTION OF TELECOMMUNICATION TOWERS ON CITY-OWNED PROPERTY; AND PROVIDING AN EFFECTIVE DATE.

City Manager Pritt read the title. As to ownership once a tower is built, Planning Director Rogers said he was fairly certain Council would not want to sell or turn over ownership. He explained various alternatives will be available. **Upon a motion by Councilman Brown, seconded by Councilman Davison, the motion passed by unanimous vote.**

Item 13b: Approval of A RESOLUTION AMENDING THE CITY OF SANIBEL PERSONNEL RULES AND REGULATIONS BY REVISING CERTAIN JOB DESCRIPTIONS, CLASSIFICATIONS, PAY GRADES, AND THE COMPENSATION/PAY PLAN; AUTHORIZING TRANSFER OF CERTAIN FUNCTIONS AND PERSONNEL FROM ONE DEPARTMENT TO ANOTHER; PROVIDING THAT THE CHANGES ARE TEMPORARY; AND PROVIDING AN EFFECTIVE DATE.

City Manager Pritt read the title. He recommended doing the least necessary with regard to staff changes due to early retirements. He reviewed the recommendations to transfer Parks & Maintenance, Building & Grounds to Public Works; delete position of Parks & Recreation Director and change current position of Recreation Superintendent (Grade 11) to Recreation Director at Grade 14. The City Engineer/Public Works Director's salary is to be increased 5% due to extra duties in managing Parks maintenance. All other positions will be evaluated by the City Manager, Finance Director and department head before filling. The proposal is to make the positions temporary, but City Manager Pritt said he preferred to make them permanent. Councilman Brown pointed out

CITY OF SANIBEL

RESOLUTION NO. 99 - 23

A RESOLUTION AUTHORIZING THE CITY MANAGER TO PREPARE AND DISTRIBUTE A REQUEST FOR PROPOSAL SOLICITING PROPOSALS FOR THE CONSTRUCTION OF TELECOMMUNICATION TOWERS ON CITY-OWNED PROPERTY; AND PROVIDING AN EFFECTIVE DATE.

NOW, THEREFORE, BE IT RESOLVED by the City Council of the City of Sanibel, Lee County, Florida:

Section 1. The City Manager is hereby authorized to prepare and distribute a request for proposal soliciting proposals for the construction of telecommunication towers on City-owned property.

Section 2. Effective date.

This resolution shall take effect immediately upon adoption.

DULY PASSED AND ENACTED by the Council of the City of Sanibel, Lee County, Florida, this 19th day of January, 1999.

AUTHENTICATION:

Mayor

City Clerk

APPROVED AS TO FORM: _____ City Attorney

1/14/99 Date

Vote of Council members:

Brown	aye
Davison	aye
Janes	aye
Reding	aye
Theiss	aye

Date filed with City Clerk: 1/20/99

RE:-RFP- TELECOM-TOWERS.ORDS22

renourishment and scenic land preservation acquisition effects on the budget. He stated the Committee had no intentions of dealing with the staff and wage plan, but did suggest the inflation rate for pay increases be reduced to 2%. Assumptions for five-year budget projections were attached as Exhibit A.

Vice Mayor Reding supported Committee review of the pension plan because it has a significant effect on the budget. As to organizational restructure, there was general agreement the Committee would not deal with personnel issues or reorganization, that this should be left to the new City Manager. Chairman Ball pointed out the Committee does need to have basic salary figures to plug into assumptions for a five-year projection. There was further discussion of the proposed review of the pension plan. Councilmembers Reding and Theiss said they would like to have the Committee's expertise with regard to costs of converting to a defined pension plan. Following further discussion, there was general agreement to the charge as proposed in the resolution, including review of the pension program and 2% for inflation. **Vice Mayor Reding moved approval of the resolution, including Assumptions. Councilmember Brown seconded.** Mayor Janes called for public comment. Louise Johnson cautioned Council to balance the refilling of positions with the fact that the public is used to good service. **The motion to approve passed by unanimous vote.**

Item 7: First Reading and Public Hearing of AN ORDINANCE RELATING TO TELECOMMUNICATIONS; AMENDING SUBSECTION I.B.2.c. OF THE LAND DEVELOPMENT CODE OF THE CITY OF SANIBEL TO DELETE THIS DEFINITION OF EARTH STATION; AMENDING SUBSECTION I.C.1.c. BY ADDING AN OVERLAY DISTRICT MAP ESTABLISHING PERMITTED USE DISTRICTS FOR TELECOMMUNICATIONS DEVICES; AMENDING SECTION I.E.10., HEIGHT EXCEPTIONS, OF THE LAND DEVELOPMENT CODE; AMENDING SECTION I.E.32 TO REFLECT CHANGES MADE NECESSARY BY THE TELECOMMUNICATIONS ACT OF 1996; PROVIDING REGULATIONS ON TELECOMMUNICATIONS DEVICES; AMENDING SECTION III.C.2. TO PROVIDE VARIANCE STANDARDS FOR TELECOMMUNICATIONS DEVICES; AMENDING SECTION VII.B.2. TO, VII.B.3., VII.B.6. AND VII.D.3. TO ESTABLISH APPLICATION FEES FOR TELECOMMUNICATIONS DEVICES; PROVIDING FOR CODIFICATION; PROVIDING FOR CONFLICT AND SEVERANCE; AND PROVIDING AN EFFECTIVE DATE.

City Manager Pritt read the title. He explained the ordinance has been through the Planning Commission process and includes some recommendations, and also that it requires two complete public hearings. It has been duly advertised, and, as an extra measure, notices have been sent to areas that might be specifically affected.

Planning Director Bruce Rogers introduced Michael Kurtis, President of Kurtis and Associates, P C., the City's telecommunications consultant hired to assist in bringing City ordinances into compliance with the Telecommunications Act of 1996. Mr. Kurtis explained the 1996 Act provides that local governments maintain zoning rights but they cannot preclude or act to preclude the ability of a provider to provide service. The ordinance also cannot discriminate in favor of one carrier or class of carrier. He said that to date no ordinance banning the towers has been successful. Mr. Kurtis began a detailed overhead presentation including review of different types of structures (guyed tower, self-supporting steel lattice tower and monopole) and advantages/disadvantages of each. He pointed out essentially, the ordinance tires to balance issues and concerns the carriers face with the aesthetics of the island and the need to allow the service.

Vice Mayor Reding pointed out that Sanibel is a bird flyway and asked if there was any technical impediment to locating towers outside the flyway, in the Punta Rassa area, for example. Mr. Kurtis responded that the water and all the vegetation and trees on Sanibel would make the signal virtually unusable. He explained the preference for wireless phones dramatically increases the level of service needed. Mr. Kurtis provided more details on his recommendation for three towers, and explained that to provide solid service in cars and residences, he would balance the need for multiple sites with bringing the heights of multiple sites down. Although some Councilmembers weren't convinced of the need, and suggested that service currently provided was adequate, Mr. Kurtis said he didn't think Sanibel residents would be satisfied with a level of service less than that of other communities.

Planning Director Bruce Rogers reviewed the highlights of the ordinance. He noted the WHEREAS clauses set the tone. He reviewed Purposes and Intent, Applicability, and Permitted Uses (either accessory or principal use) and distributed a Telecommunications Districts Map to explain what is permitted at what location, including: Primary Intended Uses, Conditional Uses and Prohibited Uses. Director Rogers provided additional details on how districts were determined. He pointed out that both physical and visual impacts were taken into consideration. Collocation (sharing of telecommunications devices) possibilities incentives, permitting procedures (height requirements) and application requirements were reviewed and explained.

Sanibel Natural Resources Director Rob Loflin reported on the bad effect the towers have on birds, specifically the lighting which confuses them during migration. He also pointed out the higher the tower the more damage it will do; he recommending focusing on collocation and heights no higher than in the proposed ordinance. Director Loflin said guy wires should be prohibited completely and that every new tower should require a full public hearing before the Planning Commission. Mayor Janes called for public comment.

Janet Walker, 538 Lake Murex Circle, read into the record a statement of her objections to the ordinance, which she alleged accommodates Sprint and does not protect Sanibel. She reported on research regarding how other governments are dealing with the Telecommunications Act, including several that are not allowing towers, including Martha's Vineyard; Cape Cod; Carmel by the Sea, CA; Hilton Head Island, NC, and Boca Grande. She said some communities have placed a moratorium on towers pending stricter review. She concluded the proposed amendment was faulty and flawed and strongly urged that it be sent back to the drawing board.
Louise Johnson recommended a long-term permit for any tower over 65', no lighting and no guy wires. She pointed out that Sanibel, as a sanctuary island, is different than other places and that she was happy to hear of the challenges in other cities.
Degnan Walker added his objections, explaining how the ordinance would benefit Sprint, arguing that the necessary service is already available and suggesting the City's planners were giving into the Federal government and should pay more attention to the Vision Statement. He urged staff and Council to research how other governments are addressing the Telecommunications Act.
Charlie Morrison, Lee County. Mosquito Control, addressed lighting requirement, calling attention to the threat to public safety with no lighting and recommending any towers 150' and over be lighted.
Henry Glissman suggested the City could beat Sprint the same way they had MacDonald's.
Rudy Krukar noted the need to address medical impacts from microwave towers.

At the request of Councilmembers Madison and Brown, Mr. Kurtis responded to Mrs. Walker's comments. He said some cities like Hilton Head have avoided adding towers by using structures already available; some like Martha's Vineyard are attempting to restrict them; and Cape Cod has set up a review board. He advised the City is precluded from addressing the medical issue since the FCC is responsible for establishing guidelines. He pointed out the ordinance requires certification and demonstration of compliance. Mr. Kurtis also explained the concept of steering carriers to less objectionable locations, and said that towers not being used will be dismantled.

Following further Council discussion, Councilman Madison requested that all recent decisions regarding challenges to the Telecommunications Act be researched. Councilmember Theiss requested more information on what options are available, and Mayor Janes agreed questions and objections raised, especially by the Walkers, should be answered.

Planning Director Rogers clarified that, based on today's hearing, staff would not make any changes to the ordinance itself. Vice Mayor Reding pointed out, for the public, that subsequent public hearings will involve motions and discussion for amendments to the ordinance. He indicated his desire to get concrete and reliable answers to questions raised. As to the best way to determine how other cities are dealing with the Telecommunications Act, it was suggested the Planning Director could contact them by phone.

Mayor Janes declared a First Reading, Second Reading to be January 19, 1999 at 10:00 a.m.

Item 9: Second Reading and Public Hearing of AN ORDINANCE RELATING TO TELECOMMUNICATIONS; AMENDING SUBSECTION I.B.2.c. OF THE LAND DEVELOPMENT CODE OF THE CITY OF SANIBEL TO DELETE THIS DEFINITION OF EARTH STATION; AMENDING SUBSECTION I.C.1.c. BY ADDING AN OVERLAY DISTRICT MAP ESTABLISHING PERMITTED USE DISTRICTS FOR TELECOMMUNICATIONS DEVICES; AMENDING SECTION I.E.10., HEIGHT EXCEPTIONS, OF THE LAND DEVELOPMENT CODE; AMENDING SECTION I.E.32 TO REFLECT CHANGES MADE NECESSARY BY THE TELECOMMUNICATIONS ACT OF 1996; PROVIDING REGULATIONS ON TELECOMMUNICATIONS DEVICES; AMENDING SECTION III.C.2. TO PROVIDE VARIANCE STANDARDS FOR TELECOMMUNICATIONS DEVICES; AMENDING SECTION VII.B.2. TO, VII.B.3., VII.B.6. AND VII.D.3. TO ESTABLISH APPLICATION FEES FOR TELECOMMUNICATIONS DEVICES; PROVIDING FOR CODIFICATION; PROVIDING FOR CONFLICT AND SEVERANCE; AND PROVIDING AN EFFECTIVE DATE.

City Manager Pritt explained that legal advertising requirements had been followed. Planning Director Bruce Rogers brought Council up to date from the January 5 hearing, explaining the ordinance is to bring the City into conformance with the Telecommunications Act of 1996 (Act) and, in addition, provide opportunity to locate antennas so residents and visitors have access to the technology. The ordinance sets up a process whereby providers can apply for and meet standards, and install antennas which may or may not involve towers. Basically, it provides that towers are permitted at certain locations as a matter of right, provided all standards can be met; as conditional uses where very strict standards must be met; and not permitted at all in certain other areas, primarily preservation and conservation lands. The ordinance also provides regulations for other devices not subject to the Act--antennas put up by the Fire District, City, service stations, taxi companies, etc.

Council had directed that a list of locations suggested by residents Mr. & Mrs. Walker as successfully challenging the Act be investigated. Michael Kurtis, the City's telecommunications consultant, reviewed court cases brought up by the Walkers, concluding that no bans on towers have been upheld, although some locations were found not be an appropriate use because other properties were available. Director Rogers reported that he had spoken with officials in Martha's Vineyard (which has a by-laws created by the Cape Cod Commission, which do not prohibit towers and are much the same as Sanibel's ordinance; Pacific Grove, California no longer has a moratorium in effect--they have had no applications and no interest; Half Moon Bay had a moratorium in effect for one year--a carrier put an antenna on a city-owned structure, there have been no further requests and no ordinance; Carmel by the Sea has an ordinance that permits towers under certain requirements--providers are building towers in Monterey County; and Hilton Head has tall buildings and towers where antennas can be placed. Director Rogers said he was advised by an experienced attorney that it is not hard to build a tower in Punta Gorda or Charlotte County, and there is certainly no prohibition; Boca Grande, where Sprint wanted a new tower, but when advised that a public hearing was required said they'd repair the existing tower.

Discussion turned to types of structures, with Vice Mayor Reding suggesting Council might want to rule out latticework structures, but noting he had observed an example of a monopole that might be acceptable. Mr. Kurtis pointed out monopoles also become very large as multiple carriers are added, and Director Rogers advised the ordinance requires monopoles unless the antenna requires more lateral rigidity. He also clarified that in any area where towers are permitted as a right, either latticework or monopole towers could be permitted without a public hearing. Director Rogers summarized there are two policy issues before Council: limiting heights which

means each tower primarily serves one provider, and leads to more towers; and when to require public hearings. During discussion of Councilman Davison's suggestion to use the Planning Commission's Summary Disposition was procedure for some applications, Director Rogers pointed out the application would still have to be the same as for a Planning Commission hearing, and that the thrust of the ordinance is to make the application procedure simpler and, as a result, channel applications for towers to a given district.

Vice Mayor Reding requested to hear from Natural Resources Director Rob Loflin, who said his main interest would be that neighbors let the City staff know issues regarding particular sites, such as a bird rookery. He also said he believed that every application should require a public hearing. Mayor Janes called on members of the industry who were present.

Attorney Matt Uhle, on behalf of Sprint; Steven Hartsell, on behalf of Belle South Mobility, and Russell Schropp, Sprint PCS, all urged Council to pass the ordinance as written, especially allowing towers in the green area as a right. They objected to the proposal for public hearings for all towers.

Janet and Degnan Walker spoke in strong opposition to the ordinance, which they believed to be flawed and unacceptable and should be "sent back to the drawing board." Mrs. Degnan suggested the ordinance does not plan for the future, but only accommodates the desires of Sprint. Mr. Walker read a letter into the record describing a new technology that will make tall towers obsolete, and asked why it has not been mentioned. He recommended determining what wireless service is available and asking providers to develop a long-range plan for future needs.

Dale Armstrong objected to only one phone company being available on Sanibel.

Bill Schlackman objected to having a primary site location near his house on Sand Castle Road and recommended finding locations away from high residential concentrations.

Charlie Morrison, Mosquito Control, stated his concerns are for safety of citizens. He said a flashing light would be acceptable, just something that calls attention to the tower from the air. He said Lee County and Ft. Myers have passed ordinances that require lighting over 150', which is what he is requesting from Sanibel.

Back to Council, Councilman Davison pointed out the ordinance specifies preferred areas, and standards; he supported the ordinance as written, but added that he could support a revision to require public hearings for every application. Councilman Brown asked for more clarification and Director Rogers explained further, agreeing with Councilman Brown's conclusion that if the provider's application meets all the standards for the location, in all probability it will be approved. However, the public can have input as to where on the property the tower can be placed. Councilman Brown's point was the public should not come to a hearing thinking they can stop the tower. Councilman Davison believed the standards were well devised and would result in the antennas being placed where they belong.

Director Rogers wished to address the lighting issue, noting the Planning Commission had recommended lighting on some towers. With regard to Charlie Morrison's (Mosquito Control) recommendations, he said he had drafted alternate language: towers 150' or higher above ground will have a single, blinking red light of the type approved by the FAA, with a dark interval longer than lighted, illuminated only during hours when emergency aircraft are

flying in area. There was further discussion with Mr. Morrison as to a schedule for turning the lights on and off, and it was agreed he would work with Director Rogers to coordinate a schedule. **Councilman Davison moved to refer the ordinance back to staff for a rewrite to include the requirement for public hearings on each and every tower, but retaining all standards; and to include language suggested by Director Rogers, including a method to activate lights on and off. Mayor Janes seconded and the motion to amend passed by unanimous vote. Mayor Janes then scheduled a continued reading for February 2, 1999 at 10:00 a.m. in MacKenzie Hall.** The meeting was recessed for lunch at 12:57 p.m. and called back to order at 1:07 p.m..

Item 14: Presentation by Lee County Electric Co-op concerning transmission line and substation replacement and improvements.

Approval of A RESOLUTION DETERMINING THE REQUEST OF THE LEE COUNTY ELECTRIC COOPERATIVE FOR A DETERMINATION THAT ITS PLANS TO REPLACE THE EXISTING 68Kv TRANSMISSION LINE WITH A 138Kv TRANSMISSION LINE FOR 8.9 MILES (3.9 MILES ACROSS OPEN WATER) FROM THE PINE ISLAND SUBSTATION TO THE SANIBEL SUBSTATION AND TO UPGRADE THE SANIBEL SUBSTATION IS CONSISTENT WITH THE SANIBEL PLAN; AND PROVIDING AN EFFECTIVE DATE.

City Manager Pritt read the title, explaining Council needs to determine whether the plan is or is not consistent with the Sanibel Plan. Assistant Planning Director Ken Pfalzer was present for the City. Bill Hetherington of the Co-op was also present, along with engineers John Wiese, Bill Hansen and Dave Wedell. The City Manager noted that efforts to have someone from the Florida Department of Environment Protection (DEP) were not successful. Ken Pfalzer explained that since the last hearing staff has had many discussions with the Co-op's consulting firms, and has received some very satisfactory responses to concerns, which will be presented to Council today.

Bill Hetherington explained the designers and experts would focus on why the Co-op's plan is in conformance with the Sanibel Plan. He reviewed the background of the substation, pointing our problems with the existing facility and noting that Lee County strongly supported the plan to upgrade facilities. Consulting engineer John Weise discussed environmental permitting, cost and maintenance, reliability and repairability and hurricane impacts. He explained the Co-op had started about a year ago working with the U.S. Corps of Engineers and the DEP, the Charlotte Harbor National Estuary Program (CHNEP), the Aquatic Preserve and the Wildlife Refuge. He explained the underground option had been rejected because it was not practical in this particular setting with regard to environmental impacts, and also is not economically feasible.

Bill Hanson, engineer, presented additional information on the pros and cons of four distinct technologies to illustrate further why overhead lines are the preferred option and why underground cables are not practical. He said underground cables are used only when it is impractical to use overhead lines. He explained that underground cables would require excessive right-of-way, and the required dredging which would most likely not be permitted. It would require 60 miles of trenching, construction might result in jet plowing, there is a potential for oil leakage and there would have to be mooring facilities on both sides. The proposed construction would be in existing right-of-way, no dredging is required and there will be fewer structures than with the existing line. The permit has been filed, and approval is expected within the next couple weeks; underground cables would require starting from scratch.

proceedings, but only with Council direction. In response to Mayor Janes' concerns with proceeding to eminent domain only as a last resort, Vice Mayor Reding explained eminent domain is the only option left for the remaining parcels. City Manager Pritt confirmed that the City has acquired most of the lots that can be purchased, and that he would support Council's directing staff to proceed with the necessary steps to acquire remaining lots—updating appraisals, sending final offers, etc. Although Natural Resources Director Rob Loflin was not available to comment, Vice Mayor Reding pointed out once the City owns the land, Director Loflin has indicated he will be able to apply for grants to do habitat restoration. Consensus was to proceed as requested by Vice Mayor Reding.

Item 3b: Appearance by Ann Hauck, Council of Civic Associations, regarding hurricane evacuation and shelters and A RESOLUTION SUPPORTING THE PETITION BY THE COUNCIL OF CIVIC ASSOCIATIONS, INC. TO THE U.S. CORPS OF ENGINEERS CONCERNING HURRICANE SHELTERS AND EVACUATION; AND PROVIDING AN EFFECTIVE DATE. (Vice Mayor Reding)

City Manager Pritt read the title. Ann Hauck read into the record a letter from the Council of Civic Associations explaining the widespread abuse of the wetlands mitigation program and the importance of preserving Summerlin Road wetlands with regard to evacuation from Sanibel. Ms. Hauck requested language be added to the resolution alluding to concerns for wetlands, but it was pointed out the resolution covers everything in the Civic Association's petition. **Councilman Davison moved approval. Vice Mayor Reding seconded.** During public comment, Louise Johnson, John Jensen, Robert Backus and Dick Curtin (for COTI) expressed their support and Kathy Malone, Council of Civic Associations, thanked Council for the resolution of support. **The motion to approve passed by a unanimous vote of 4-0.**

Item 6: Continued Reading and Public Hearing of AN ORDINANCE RELATING TO TELECOMMUNICATIONS; AMENDING SUBSECTION I.B.2.c. OF THE LAND DEVELOPMENT CODE OF THE CITY OF SANIBEL TO DELETE THE DEFINITION OF EARTH STATION; AMENDING SUBSECTION I.C.1.c. BY ADDING AN OVERLAY DISTRICT MAP ESTABLISHING PERMITTED USE DISTRICTS FOR TELECOMMUNICATIONS DEVICES; AMENDING SECTION I.E.10., HEIGHT EXCEPTIONS, OF THE LAND DEVELOPMENT CODE; AMENDING SECTION I.E.32 TO REFLECT CHANGES MADE NECESSARY BY THE TELECOMMUNICATIONS ACT OF 1996; PROVIDING REGULATIONS ON TELECOMMUNICATIONS DEVICES; AMENDING SECTION III.C.2. TO PROVIDE VARIANCE STANDARDS FOR TELECOMMUNICATIONS DEVICES; AMENDING SECTION VII.B.2., VII.B.3., VII.B.6. AND VII.D.3. TO ESTABLISH APPLICATION FEES FOR TELECOMMUNICATIONS DEVICES; PROVIDING FOR CODIFICATION; PROVIDING FOR CONFLICT AND SEVERANCE; AND PROVIDING AN EFFECTIVE DATE.

City Manager Pritt read the title of Draft 13 No. and advised that the ordinance had been advertised in accordance with state regulations. Planning Director Bruce Rogers reviewed changes made from Draft No. 12, primarily Council's direction to require a long form development permit and public hearing for installation of all telecommunications towers as a principal use; and lighting requirement that structures 150' above ground level or higher must be lighted with blinking red light, light only to be illuminated when mosquito control or emergency services are flying. Regarding a letter submitted that morning by the Sanibel-Audubon Society recommending white lights, Director Rogers pointed out he had tried to make the lighting requirements as bird-friendly as possible, and thought he had received agreement from

everyone, including U.S Fish & Wildlife, that the language as proposed was acceptable. Councilmember Theiss brought up her previous recommendation for lights to be shielded, and there was general agreement to add language indicating lights to be shielded underneath. Director Rogers continued with review of other changes. There was no Council discussion and Mayor Janes called for public comment.

Attorney Matt Uhle, representing Sprint Florida, expressed support for the ordinance as previously drafted because it articulated a clear vision of where the towers should go by identifying green areas with no public hearing process. He said the new version blurs this distinction by requiring a hearing for all applications for principal use, which suggests that Council isn't sure where they want towers to go. His concern was that there will be lots of public comment opposed to the towers and Council will be put under pressure to deny applications, whether meritorious or not.

Louise Johnson supported the change requiring public hearings because it will give people the opportunity to question and comment on proposals.

In response to Sarah Devaney, Director Rogers explained that accessory use standards (for devices on a specific parcel of land, i.e. fire station tower, tower next to gas station, small dish at residence of large dish at condominium) are not really any different that what exists today, just a little tighter.

Charlie Morrison, Lee County Mosquito Control, reported on indications from environmentalists that white strobe lighting is less intrusive (for birds) than a red light. He also reported that several emergency agencies expressed concern that safety is jeopardized by manually controlled lighting; they might have to fly on very short notice and any delay or human error could create a potentially disastrous situation. Councilman Davison suggested lights could be turned off and one from a central point like the Sanibel Police Department, and Mr. Morrison agreed this was technically feasible. Janet Walker recommended keeping towers low enough so lights aren't necessary. Jim Delaroche, Sprint, said manual operations of lights would be extremely difficult; he favored low-intensity lighting turned on at dark and off at daylight.

Elizabeth Kramer asked for more information on accessory uses, and Director Rogers explained there are no locations where accessory uses are not permitted provided standards are met. He also explained that with an application for a primary use in the green area, there is a presumption that if the applicant meets the standards they are entitled to approval. If the applicant applies for the same size tower, but outside the green area, it will only be permitted as a conditional use; many additional standards will apply and the applicant will have to demonstrate why the tower can't be located in the green area or on another structure.

Regarding the public hearing requirement, Janet Walker was advised that the purpose of the long-form permit is to allow Planning Commission review and hear from interested parties, including the public. However, if the Planning Commission finds the standards have been met, they would be required to grant the application.

Wayne Ponader reported a number of residents believe the ordinance is not in the best interests of Sanibel. He recommended the ordinance be designed to be friendly to Sanibel and not to providers. He stated it was not necessary for Sanibel to act quickly, and proposed a moratorium for at least 180 days. He explained a consultant with considerable experience on telecommunications towers in Florida is available on February 24 to present a seminar on Sanibel. Dunes residents will pay his fee and are requesting that the City pick up other miscellaneous expenses. Mr. Ponader spoke further on the need for a second

opinion and the moratorium process. Several members of the audience supported Mr. Ponader's request: Mike Gillespie, Ken Zeigler, Elizabeth Kramer, Gary Decker, Bern Katchen, Bill Schlackman and Erick Lindblad (SCCF), and Degnan Walker. Louise Johnson and (Planning Commissioner) Phyllis Bogen supported the workshop to obtain further information. Director Rogers responded to public comments. He said he is familiar with Kreines and Kreines, the consultant hired to present the seminar, and also with the Lakeland ordinance referred to. The City's consultant, Mike Kurtis, has advised that Lakeland ended up with lower towers because there are no trees or tall buildings so it is not necessary to make provision for tall towers. Sanibel's problem is the 100' Australian pine trees which interfere with signals. He also commented on concealment and camouflages, pointing out this results in much larger structures. Wayne Ponader argued if 199' towers are allowed that's what will be built, there will be no reason for any company to compromise. He said he was not convinced that lower towers won't work because of trees, that there are places that have allowed providers to prosper without 199' towers, and we need to find out more, which is what the proposed workshop would do.

City Manager Pritt read into the Florida statute that states "...no emergency ordinance may be enacted that changes zoning." He explained a previous moratorium on commercial construction was found to be invalid and that a moratorium would have to go through the Planning Commission and City Council process. He pointed out the City has already done a Notice of Pendency so, in effect, no applications are being processed to completion. Director Rogers confirmed one application has been filed, but is waiting for the outcome of this ordinance.

Back to Council, Councilmember Theiss said she would be willing to postpone the ordinance until after the workshop sponsored and paid for by the Dunes. Councilman Davison expressed his belief that the City's Notice Of Pendency serves as well as any moratorium. He was, however, willing to delay the next reading until after the Dunes seminar. Vice Mayor Reding also endorsed continuing the hearing to provide time to hear the Dunes' consultant and get a second opinion. He said he would like to see the ordinance go in the direction of monopoles instead of collocation, which results in high, massive structures. Director Rogers stated his belief that the ordinance already has such language, referring to page 18, (b) Telecommunications Devices as Principal Uses, which requires monopoles for devices higher than 65' "unless it can be demonstrated that a monopole will not provide the required lateral stability for signal propagation or loading capacity to allow for the requisite number of collocation users; then a self-supporting lattice tower may be used." This was not satisfactory to Vice Mayor Reding, who said he wanted language that has the same negativity toward latticework as for guy wires. Director Rogers read language proposed by Vice Mayor Reding, but no action was taken.

City Manager Pritt ascertained that Council wished to amend the ordinance to implement the language "and shielded underneath" with regard to lighting. Mayor Janes wished to talk further about the green space near the Dunes that was objectionable to so many residents. Director Rogers displayed a map of the proposed districts and explained why the area in questions (IWA and City-owned parcels) was selected. He acknowledged the shape of green parcels could be adjusted, and was directed to provide more information regarding an alternative.

During additional public comment, Elizabeth Kramer recommended changing the area from green to white. Director Rogers explained further to Bill Schlackman the reason for providing both permitted areas and conditional use areas. Janet Walker objected to ordinance language regarding "mounts designed to serve more than 3 providers", requesting that it be removed so as not to encourage more than three collocations and 199' towers. Joan Becke questioned measurements with regard to the IWA property, which led to further discussion of setback and height requirements.

Because of the amendment to the lighting requirements, City Manager Pritt reread the title of the ordinance into the record and clarified that all Council is doing is approving amended language regarding shielded lighting. There was no public comment on the ordinance as amended. During discussion of the proposal for a workshop, Mayor Janes stated he did not support Council participating in the workshop as a Council, and other Councilmembers indicated their agreement. **Mayor Janes declared a reading, and continued the reading to March 2, 1999 at 10:00 a.m.**

The meeting was recessed for lunch and called back to order at 2· 41 p m.

Item 5: Planning Commission Report

Vice Chair Downes reported on the January 26 Planning Commission Meeting.

Item 4: Boards and Committees
Item 4a: Approval of A RESOLUTION APPOINTING MEMBERS TO THE SANIBEL WASTEWATER RESEARCH COMMITTEE; AND PROVIDING AN EFFECTIVE DATE.

City Manager Pritt read the title and explained the Committee would be comprised of five members, all Sanibel residents. He corrected the memo accompanying the applications, clarifying that James Hagerty still wants to be on the Committee and that Graham Kortegast is not disqualified. Vice Mayor Reding expressed his concern with the incorrect information and emphasized the importance of adhering to a procedure so names and not struck in error. This led to further discussion of the agenda process, with City Manager Pritt recommending a workshop to review procedures for scheduling agenda items. An additional application was noted, that of Mark Hoepfner as recommended by Condominium Associations of Sanibel, Inc. (CASI).

Councilmember Theiss, who had recommended establishment of the Committee, expressed her ideas on the makeup of the Committee—she suggested at least three engineers, someone with either financial or management background, and someone with strong environmental background. Regarding three applications from people with Island Water Association (IWA) connections, she believed some connection would be good but not too much. Council was directed to write five names on an initialed ballot; anyone with three or more votes would be appointed. Upon a count of Ballot 1 by City Manager Pritt and Planning Commission Vice Chair Richard Downes, Shelly Storves and Richard Hulit were elected with 4 votes each. On Ballot 2, Warren Deuber and Steve Duffy were elected with three votes each. Ballot 3 showed one vote each for Mark Hoepfner and Sheila Fortney, two votes for James Hagerty—no majority. Ballot 4 was a tie, two votes each for Mark Hoepfner and James Hagerty. Ballot 5 also showed two

Item 9: City Attorney/City Manager Report

Item 9a: Approval of A RESOLUTION DETERMINING THE REQUEST OF THE DUNES GOLF & TENNIS CLUB FOR ADDITIONAL SPECIAL EVENTS PERMITS FOR 1999; AND PROVIDING AN EFFECTIVE DATE.

City Manager Pritt read the title. Jean Baer, representing the Dunes, stated that most of the requests for special events are during the day, off-season or at night, for island residents, and should not affect traffic. **Upon a motion by Councilman Davison, seconded by Councilman Brown, the motion to approve with conditions passed by unanimous vote.**

Item 9b: Approval of a RESOLUTION DETERMINING THE REQUEST OF THE SUNDIAL BEACH RESORT FOR ADDITIONAL SPECIAL EVENTS PERMITS FOR 1999; AND PROVIDING AN EFFECTIVE DATE.

City Manager Pritt read the title. Jean Baer, representing the Sundial, stated that the events are mostly off-season. **Upon a motion by Councilman Brown, seconded by Councilman Davison, the motion passed by unanimous vote, with the condition that traffic be held to a minimum.**

The meeting was recessed for ten minutes and called back to order at 10:00 a.m. There was an overflow crowd on hand for this discussion.

Item 5: Continued Reading and Public Hearing of AN ORDINANCE RELATING TO TELECOMMUNICATIONS; AMENDING SUBSECTION I.B.2.c. OF THE LAND DEVELOPMENT CODE OF THE CITY OF SANIBEL TO DELETE THE DEFINITION OF EARTH STATION; AMENDING SUBSECTION I.C.1.c. BY ADDING AN OVERLAY DISTRICT MAP ESTABLISHING PERMITTED USE DISTRICTS FOR TELECOMMUNICATIONS DEVICES; AMENDING SECTION I.E.10., HEIGHT EXCEPTIONS, OF THE LAND DEVELOPMENT CODE; AMENDING SECTION I.E.32 TO REFLECT CHANGES MADE NECESSARY BY THE TELECOMMUNICATIONS ACT OF 1996; PROVIDING REGULATIONS ON TELECOMMUNICATIONS DEVICES; AMENDING SECTION III.C.2. TO PROVIDE VARIANCE STANDARDS FOR TELECOMMUNICATIONS DEVICES; AMENDING SECTION VII.B.2., VII.B.3., VII.B.6. AND VII.D.3. TO ESTABLISH APPLICATION FEES FOR TELECOMMUNICATIONS DEVICES; PROVIDING FOR CODIFICATION; PROVIDING FOR CONFLICT AND SEVERANCE; AND PROVIDING AN EFFECTIVE DATE.

City Manager Pritt read the title and advised that the ordinance had been advertised in accordance with state regulations. Planning Director Bruce Rogers referred to Draft 14. He explained the process that had been followed to this date and suggested that Council ask questions today so that this ordinance can move forward. Mayor Janes asked for Council comments prior to public comments.

Vice Mayor Reding said it had come to his attention that Kurtis & Associates represents a lot of big telecommunications companies, but no municipalities. He said he would rather have had a consultant coming more from the standpoint of traditional Sanibel values. He reminded those present that the *Sanibel Plan* limits construction to 45' above mean sea level, a regulation that should be adhered to He

asked Mr. Kurtis if it would be possible to mount devices on existing structures, as demonstrated by Ted Kreines at the telecommunications workshop sponsored by a citizens' group, and also discussed Mr. Krienes's statement that it may not be necessary for towers to be higher than tree level since trees do not impede frequency. Mr. Kurtis responded that he does not represent any carriers in the Sanibel area, but that his expertise in the telecommunications area and his experience with other providers would be beneficial to the City of Sanibel in defending its ordinance. He provided technical details on the issue of tower heights and locations, concluding that because of the number of carriers that would be located on towers, they would have to be higher than the trees. His comments were met by a verbal outburst from several members of the audience. Councilman Brown apologized to Mr. Kurtis for the rudeness of the Sanibel citizens. Councilman Brown and Mayor Janes both took exception to some of Vice Mayor Reding's comments which appeared to challenge Mr. Kurtis's credentials. Heated discussion ensued, and Mayor Janes called for a recess. When the meeting was reconvened, Vice Mayor Reding explained he had not intended to raise any questions about Mr. Kurtis's professional qualifications or ethical judgements; he was saying only that he saw a significant difference in values between Mr Kurtis, as someone who works for the telecommunications industry, and Council, who represents the *Sanibel Plan* and Vision *Statement.*

Planning Director Rogers and Mr. Kurtis then gave a presentation using the overhead projector to illustrate cross-polarization and several different configurations. Mr. Kurtis explained that he just wanted the City to be aware of the Federal Regulations and how they pertain to Sanibel. After more discussion, Councilmember Theiss stated that she saw this as a baby ordinance which will grow into a full-grown ordinance with a little help and maturity. Mayor Janes suggested that staff could come up with a few more options before the next meeting. Councilman Davison agreed the ordinance should be sent back to Planning Department for a rewrite. Vice Mayor Reding suggested more explicit instructions for the rewrite. Mayor Janes then opened the discussion to the public.

Several members of the public expressed their opposition and concerns. Speaking were: Erick Landblad of SCCF, Mike Gillespie, Alice Kyllo, Ed Myers, Dick Walsh, Janet Walker, Charlie Morrison of Lee Mosquito Control, Bill Schlackman, Degnan Walker, John Ward, Bill Ford, Charlotte Baker, and Matt Euhle. Rose Eastwood stated her belief that her civil rights were being violated by the people opposing these towers and she would appreciate it if something could be resolved on this issue soon so that her cell phone would work on Sanibel.

Vice Mayor Reding moved that staff redesign the ordinance: to say that communications towers would be allowed "by right" up to 45 feet above mean sea level, which is the figure in the Sanibel Plan, mounted on an existing structure--building or utility pole-- that is either concealed or inconspicuous. Conditional use would be required for all other cases, but in addition, the Wireless Master Plan should be drawn up so that we can say "yes" to carriers with all kinds of conditional use applications, because they will have been carefully chosen on the basis of locations and circumstances and types of designs that minimize visual impact. Another element would be to place low-visual impact at a higher level of importance than collocation, so that collocation does not become a reason to get around the low-visual impact. That in general, we limit to monopoles and also to go beyond the vegetation buffer that is called for in the existing draft to call for actual vegetation shielding so that the structure is not conspicuous. That there be an environmental impact statement for the things that go beyond the more desirable levels in the conditional use, such as levels of intensity of application. Also to eliminate the Green Zones and incorporate the record of Ted Kreines's presentation into the record of this meeting. Councilmember

Nola Theiss seconded, but added that Andrew's points should not preclude inclusion of any other issues that have come up. Vice Mayor Reding acknowledged his points were meant as guidelines, not as exclusionary. Councilman Davison supported the motion, but on the condition that the Planning Department have flexibility on the 45' height and existing structures that would enable them to establish a minimum tower height and location that will provide for compliance with the Act. Councilman Brown said he could not support the motion until he could see it in writing and have further discussion and Mayor Janes stated the motion was to all-encompassing for him to support. Vice Mayor Reding reiterated, the motion was not intended to be set in stone, just as guidelines for staff. **The vote on Vice Mayor Reding's motion passed by a vote of 3-2, with Mayor Janes and Councilman Brown voting "no".** City Manager Pritt explained the changes could not be made by March 16, and also that Planning Director Rogers would not be in town on that date; he suggested continuing to the April 6 Council meeting. **Mayor Janes declared a reading and scheduled another reading for April 6, 1999 at 10:00 a.m.**

The meeting was recessed for lunch at 1:20 p.m. and called back to order at 2:40 p.m.

Item 10: Second Reading and Public Hearing of AN ORDINANCE AMENDING THE ENVIRONMENTALLY-SENSITIVE LANDS CONSERVATION DISTRICT MAP OF SUBSECTION I.C.1.c.(5) OF THE SANIBEL LAND DEVELOPMENT CODE BY ADDING A VACANT 22.5-ACRE PARCEL OF LAND LOCATED AT (UNASSIGNED) 400 CASA YBEL ROAD (TRACT F OF THE BUTTERKNIFE SUBDIVISION, TAX PARCEL NO. 25-46-22-t4-02000.f000) AND THE SOUTHERN 45 ACRES OF A VACANT 49-ACRE TRACT LOCATED AT (UNASSIGNED) 2295 PERIWINKLE WAY (TAX PARCEL NO. 26-46-22-T3-00004.0090) TO THAT DISTRICT; PROVIDING FOR CODIFICATION; PROVIDING FOR CONFLICT AND SEVERANCE; AND PROVIDING AN EFFECTIVE DATE.

City Manager Pritt read the title. Assistant Planning Director Ken Pfalzer reviewed the case, which had been presented in detail at the February 16 Council meeting. **Vice Mayor Reding moved approval, Councilman Davison seconded, and the ordinance was adopted by unanimous vote.**

Item 11: Second Reading and Public Hearing of AN ORDINANCE PROVIDING FOR A SMALL SCALE AMENDMENT TO THE FUTURE LAND USE MAPS OF THE SANIBEL PLAN ADOPTED PURSUANT TO SECTION 4.1.1.I. WHICH ALSO AMENDS THE ZONING MAP OF THE SANIBEL LAND DEVELOPMENT CODE, SO AS TO DESIGNATE ON THE MAP A SPECIAL USE DISTRICT FOR A SELF-STORAGE FACILITY ON AN APPROXIMATELY 2.39 ACRE PARCEL OF LAND LOCATED ON THE SOUTH SIDE OF SANIBEL-CAPTIVA ROAD (APPROXIMATELY ¼ MILE EAST OF RABBIT ROAD) (FORMERLY IWA WATER PLANT); SAID PARCEL BEING IN SECTION 28, TOWNSHIP 46 SOUTH, RANGE 22 EAST (TAX PARCEL #28-46-22-T2-00006.003B); SPECIFYING THE USES PERMITTED IN SUCH SPECIAL USE DISTRICT; PROVIDING FOR DEVELOPMENT REGULATIONS TO BE ADOPTED BY SEPARATE ORDINANCE; DIRECTING THE CITY MANAGER TO INDICATE SUCH AMENDMENT, WITH REFERENCE TO THIS ORDINANCE, ON THE ECOLOGICAL ZONES MAP OF THE FUTURE LAND USE MAP; PROVIDING FOR CODIFICATION; PROVIDING FOR CONFLICT AND SEVERANCE; AND PROVIDING AN EFFECTIVE DATE.

CITY OF SANIBEL

RESOLUTION NO. 99 -71

A RESOLUTION PERTAINING TO TELECOMMUNICATIONS; DIRECTING THE CITY MANAGER FORTHWITH TO PREPARE AND SUBMIT FOR CONSIDERATION AN ORDINANCE IMPLEMENTING A MORATORIUM ON PROCESSING OR APPROVAL OF APPLICATIONS FOR CERTAIN TELECOMMUNICATIONS DEVICES AND FACILITIES; DECLARING THAT A MORATORIUM ON SAME IS PENDING AND IS ZONING IN PROGRESS; DIRECTING THE CITY MANAGER TO PUBLISH AND POST A NOTICE OF PENDENCY; REQUESTING THE PLANNING COMMISSION TO EXPEDITE REVIEW AND RECOMMENDATION OF SUCH ORDINANCE; AND PROVIDING AN EFFECTIVE DATE.

WHEREAS, telecommunications devices may impact negatively on the appearance of the community, affect personal property values, and health of its citizens; and

WHEREAS, advanced technology in the telecommunications field allows measures that may mitigate effects on the community; and

WHEREAS, the City is considering legislation regulating telecommunications devices and facilities; and

WHEREAS, in several public hearings concerning the legislation it has become evident that other means of regulating telecommunications facilities and devices should be explored; and

WHEREAS, the Council deems it advisable to seek additional professional advice and assistance in order to consider other lawful methods of regulating such devices and facilities consistent with the goals, policies, objectives and vision of the City of Sanibel; and

WHEREAS, it will take a reasonable amount of time to obtain the assistance and to perform the data collection and analysis necessary for reasonable regulations consistent with City goals;

NOW, THEREFORE, BE IT RESOLVED by the City Council of the City of Sanibel, Lee County, Florida:

Section 1. The City Manager is hereby directed forthwith to prepare an ordinance implementing a 180-day moratorium on processing or approval

of applications for telecommunications devices and facilities which entail construction of any new tower or facility exceeding 45 feet in height or which involve any increase in height of any existing tower or facility.

Section 2. The Council hereby declares that a moratorium on applications as described in Section 1, above, is pending and is zoning in progress.

Section 3. The City Manager is hereby directed to publish and post a Notice of Pendency of the proposed moratorium ordinance.

Section 4. The Planning Commission is hereby requested to expedite its review and recommendation of such ordinance.

Section 5. Effective date.

This resolution shall take effect immediately upon adoption.

DULY PASSED AND ENACTED by the Council of the City of Sanibel, Lee County, Florida, this 6th day of April, 1999.

AUTHENTICATION:

Mayor

City Clerk

APPROVED AS TO FORM: City Attorney

4/7/99
Date

Vote of Council members:

Brown	Aye
Hillebrandt	Aye
Janes	No
Reding	Aye
Theiss	No

Date filed with City Clerk: 4/9/99

RES-TELECOMMUNICATIONS MORATORIUM.ORD24

Item 9b: Approval of A RESOLUTION APPROVING ADDENDUM 1 TO THE AGREEMENT FOR PROFESSIONAL CONSULTING SERVICES BETWEEN THE CITY OF SANIBEL AND KURTIS & ASSOCIATES, P.C. CONCERNING TELECOMMUNICATIONS MATTERS; AND PROVIDING AN EFFECTIVE DATE.

Item 9c: Approval of A RESOLUTION APPROVING A CONTRACT WITH WALLIPS ENTERPRISES, INC., DBA SANIBEL TREE SERVICE FOR THE 1997-1998 AUSTRALIAN PINE TREE REMOVAL PROJECT; AND PROVIDING AN EFFECTIVE DATE.

Item 9d: Approval of A CONTRACT APPROVING A CONTRACT WITH WILSON, MILLER, BARTON & PEEK, INC. FOR SURVEYING SERVICES FOR PHASE II OF THE SANIBEL SEWER SYSTEM EXPANSION PROJECT; AND PROVIDING AN EFFECTIVE DATE.

Item 9e: Approval of A RESOLUTION ACCEPTING THE RESIGNATION OF A MEMBER OF THE SANIBEL VEGETATION COMMITTEE; AND PROVIDING AN EFFECTIVE DATE. (Resignation of Connie Holsinger)

Item 9f: Approval of A RESOLUTION APPROVING A LEASE AGREEMENT FOR THE PROPERTY LOCATED AT 2897 ISLAND INN ROAD; AUTHORIZING THE CITY MANAGER TO EXECUTE SAID LEASE; AND PROVIDING AN EFFECTIVE DATE. (Lance Luna lease)

Item 9g: Approval of A RESOLUTION ACCEPTING A QUIT CLAIM DEED FROM SANIBEL BAYOUS HOMEOWNERS ASSOCIATION, INC. FOR A PORTION OF WILDLIFE DRIVE; AUTHORIZING THE CITY ATTORNEY TO RECORD SAME; AND PROVIDING AN EFFECTIVE DATE.

Item 9h: Approval of A RESOLUTION APPROVING CHANGE ORDER NO. 2 TO THE CONTRACT WITH WHARTON-SMITH, INC. FOR THE DONAX WATER RECLAMATION FACILITY IMPROVEMENTS PROJECT; AND PROVIDING AN EFFECTIVE DATE.

City Manager Price read the title. Councilman Reding expressed his discomfort with expanding the old Donax Plant, noting the Wulfert Plant is newer and more modern. He requested that further efforts be made toward annexing Captiva so the Wulfert Plant can be utilized. There was further discussion of the process for annexing Captiva, but Mayor Kain cautioned that it was not appropriate to bring up such a big issue without giving both the public and Captiva notice. Councilman Reding explained further he was just offering his rationale for being uncomfortable with the resolution. City Manager Price pointed out that Council had directed staff to proceed with the one plant alternative, i.e., expansion of the Donax Plant. Councilman Reding moved to continue item 9h. Utilities Director John Hefty pointed the change order is required to expand the pretreatment structure; if the change order is not approved it makes no sense to go ahead with the contract for the Donax Plant. In response to Councilman Reding, the City Manager said that while this action does not close the door to making the Wulfert Plan work, it gets us closer. He added that staff has done everything possible to bring Captiva in but there is no one on Captiva to make a commitment. In addition, the County has not expressed any interest either, and eventually we will have to decided to cut out Captiva and continue with our plans as approved by Council direction. Councilman Reding's motion to continue failed for lack of a second. ***Vice Mayor Madison moved approval. Councilman Janes seconded. The motion to approve passed by a vote of 4-1, Councilman Reding dissenting.***

The meeting was recessed at 12:57 and called back to order at 2:00 p.m .

CITY OF SANIBEL

RESOLUTION NO. 98 - 167

A RESOLUTION APPROVING ADDENDUM 1 TO THE AGREEMENT FOR PROFESSIONAL CONSULTING SERVICES BETWEEN THE CITY OF SANIBEL AND KURTIS & ASSOCIATES, P.C. CONCERNING TELECOMMUNICTIONS MATTERS; AND PROVIDING AN EFFECTIVE DATE.

WHEREAS, pursuant to Resolution No. 98-17, adopted on January 20, 1998, the City entered into an Agreement for Professional Consulting Services with Kurtis & Associates, P.C. concerning telecommunications matters; and

WHEREAS, additional work has been required due to applications which have been filed with the City for telecommunications facilities; and

WHEREAS, it is therefore necessary to obtain and provide additional services of the same nature as those set forth in the Agreement for Professional Consulting Services;

NOW, THEREFORE, BE IT RESOLVED by the City Council of the City of Sanibel, Lee County, Florida:

Section 1. Addendum 1 to the Agreement for Professional Consulting Services between the City of Sanibel and Kurtis & Associates, P.C., which shall be numbered as City of Sanibel Contract No. 98-09-66, is hereby APPROVED, and the City Manager and City Attorney are authorized to execute same on behalf of the City.

Section 2. Effective date.

This resolution shall take effect immediately upon adoption.

DULY PASSED AND ENACTED by the Council of the City of Sanibel, Lee County, Florida, this 1st day of September, 1998.

AUTHENTICATION:

Wallace M. Kain
Mayor

Gary L. Price
City Clerk

APPROVED AS TO FORM: Robert D. Pritt
City Attorney

8/24/98
Date

Vote of Council members:

Davison	aye
Janes	aye
Kain	aye
Madison	aye
Reding	aye

Date filed with City Clerk: SEP - 1 1998

CONSENT AGENDA ITEM

RES-ADDENDUM-KURTIS.ORDS18

CONSULTING SERVICES

This Addendum, made and entered into effective September 2nd, 1998, by and between the City of Sanibel, Florida, 800 Dunlop Road, Sanibel, Florida 33957 (the City), and Kurtis & Associates, P.C., Suite 600, 2000 M Street N.W., Washington, D.C. 20036 (the Consultant),

WITNESS:

WHEREAS, the parties have previously entered into an Agreement for Professional Consulting Services dated January 22, 1998, known as City of Sanibel Contract No. 98-01-06; and

WHEREAS, additional work has been required due to applications which have been filed with the City for telecommunications facility; and

WHEREAS, it is therefore necessary to obtain and provide additional services of the same nature as those set forth in the Agreement for Professional Consulting Services;

NOW, THEREFORE, in consideration of these premises, the City and the Consultant agree as follows:

1. The City, jointly through its City Manager and City Attorney, engages the Consultant to provide the services set forth in this Addendum 1 to Agreement for Professional Consulting Services. The Consultant agrees to render the consulting services set forth in this Addendum to the Agreement as requested and in a timely, professional and competent manner.

2. The services to be rendered under this Addendum 1 to Agreement for Professional Consulting Services includes all of the services set forth in the original Agreement for Professional Consulting Services as required and as needed by the City.

3. The limit of authority under this Addendum 1 to Agreement for Professional Consulting Services is $10,000.00.

4. All other terms contained in the Agreement for Professional Consulting Services, including the

CITY OF SANIBEL CONTRACT NO. 98-09-66

RESOLUTION NO. 98 - 58

CITY OF SANIBEL

PLANNING COMMISSION

IN THE MATTER OF: City of Sanibel

APPLICANT: City of Sanibel

APPLICATION NO: 97-195-LDC

CONCLUSION OF HEARING: November 10, 1998

ADOPTION OF RESOLUTION: November 24, 1998

WHEREAS, the City of Sanibel has submitted an application for consideration of an amendment to the Land Development Code which proposes to establish regulations for telecommunication devices ; and

WHEREAS, workshops have been held on the impact on the 1996 Telecommunication Act; and

WHEREAS, a public hearing was legally and properly advertised and held on November 10, 1998, before the Sanibel Planning Commission; and

WHEREAS, Section III.H.2. of the Land Development Code provides that the Planning Commission shall recommend amendments to the Land Development Code in accordance with the following standards:

a. The Planning Commission shall make reference to the Sanibel Plan to determine if the proposed amendment to the Land Development Regulations is consistent with the intent and purpose of the Plan.

b. The Planning Commission shall determine whether the proposed amendment:

(1) Will encourage the most appropriate use of land and city resources, consistent with the public interest;

(2) Will prevent the overcrowding of land and avoid the undue concentration of population;

(3) Will adversely affect development of adequate and efficient provisions for transportation, water, sewer, schools, parks, recreation facilities, and the environmental, social and economic resources of the City of Sanibel;

(4) Will adversely affect the character and stability of the present and future land use and development of the community;

(5) Will adversely affect orderly growth and development;

(6) Will preserve, promote, protect and improve the public health, safety and general welfare of the community; and

(7) Is consistent with the city Charter; and

WHEREAS, said application has been considered by the Planning Commission in a public meeting for consistency with the Sanibel Plan and compliance with the requirements of Section III.H.2.b set forth above; and

WHEREAS the Planning Commission made the following conclusion of law that the proposed ordinance amending the Land Development Code is consistent with the Sanibel Plan and meets the requirements of Section III.H.2.b. above.

NOW, THEREFORE, BE IT RESOLVED by the Planning Commission that it recommends **APPROVAL** of a proposed ordinance amending the Land Development Code entitled (CA 754, Draft No. 8, 11-4-98):

> AN ORDINANCE RELATING TO TELECOMMUNICATIONS; AMENDING SUBSECTION I.B.2.c. OF THE LAND DEVELOPMENT CODE OF THE CITY OF SANIBEL TO DELETE THE DEFINITION OF "EARTH STATION"; AMENDING SUBSECTION I.C.1.c. BY ADDING AN OVERLAY DISTRICT MAP ESTABLISHING PERMITTED USE DISTRICTS FOR TELECOMMUNICATIONS DEVICES; AMENDING SECTION I.E.10., HEIGHT EXCEPTIONS OF THE LAND DEVELOPMENT CODE; AMENDING SECTION I.E.32. TO REFLECT CHANGES MADE NECESSARY BY THE TELECOMMUNICATIONS ACT OF 1996; PROVIDING REGULATIONS ON TELECOMMUNICATIONS DEVICES; AMENDING SECTION III.C.2. TO PROVIDE VARIANCE STANDARDS FOR TELECOMMUNICATIONS DEVICES; AMENDING SECTION VII.B.2. TO ESTABLISH APPLICATION FEES FOR TELECOMMUNICATIONS DEVICES; PROVIDING FOR

CODIFICATION; PROVIDING FOR CONFLICT AND SEVERANCE; AND PROVIDING AN EFFECTIVE DATE.

The above recommendation includes the verbal amendments made by the City at the hearing of November 10, 1998, to include:

a) The words "should" and "must" will be replaced by the word "shall."
b) The staff identified certain technical revisions to the draft ordinance.
c) Page 25 of the draft subparagraph h. Assignment and Subleasing of Telecommunication Devices as Principal Uses needs to specifically state the City of Sanibel in subparagraphs 2 and 3; and
d) Revise page 25 subsection j (1)(b) to specifically state it will be submitted to the City.

HOWEVER, BE IT FURTHER RESOLVED, that the Planning Commission recommends additional consideration and revision to the following:

1) That careful consideration should be given as to whether it is necessary to include a deviation section authorizing the city manager to grant deviations and, if so, the standards and definitions should be more closely defined; and

2) Currently temporary use permits are long-form permits approved by the Planning Commission; therefore the section on the temporary use permits should be re revised to accomplish this change; and

3) The Planning Commission specifically declined to recommend the change requested at the hearing during public comments and recommends to City Council that the ordinance remain unchanged and that any telecommunication device requesting to exceed the height of 165 feet shall require conditional use permit approval.

4) Recommended that for any communication device in excess of 165 feet that lighting be considered for public safety purposes; however, considering the effect of lights on wildlife, specifically all birds, standards for lighting to minimize that impact should be considered.

The foregoing Resolution was adopted by the Planning Commission upon a motion by Planning Commission Member Richard H. Downes, and seconded by Planning Commission Member Phyllis Bogen, and the vote was as follows:

John Veenschoten Aye Richard H. Downes Aye

Steven V. Greenstein	Aye	Martin Harrity	Aye
Edith Slayton	Aye	Phyllis Bogen	Aye

DULY PASSED AND ADOPTED this 24th day of November, 1998.

SANIBEL PLANNING COMMISSION

Signed: _____ Date signed: 12/1/98
Chairman

Date filed with City Manager: 12/1/98
Filing Date

CITY OF SANIBEL

RESOLUTION NO. 99 - 72

A RESOLUTION DIRECTING THE CITY MANAGER TO SOLICIT PROPOSALS FOR PROFESSIONAL CONSULTING SERVICES FOR ASSISTANCE IN THE DEVELOPMENT OF A MASTER PLAN FOR TELECOMMUNICATION FACILITIES OR DEVICES; PROVIDING A SCOPE OF SERVICES; PROVIDING CERTAIN QUALIFICATIONS; AND PROVIDING AN EFFECTIVE DATE.

WHEREAS, the City Council is considering alternative measures for regulating telecommunication facilities or devices; and

WHEREAS, in order to obtain a different view of various methods of regulating such facilities or devices, or to provide for other types or location of telecommunications devices, the Council deems it advisable to seek proposals for planning services in connection with same;

NOW, THEREFORE, BE IT RESOLVED by the City Council of the City of Sanibel, Lee County, Florida:

Section 1. The City Manager is hereby directed to solicit proposals for professional consulting service from a qualified planning consultant for assistance in the development of a master plan for telecommunication facilities or devices.

Section 2. The services to be rendered will include, without limitation, the evaluation of characteristics of Sanibel as related to telecommunication facilities or devices; data collection and analysis; presentation of viable alternatives to allowance of towers; mapping where necessary; and preparation of a sustainable master plan for location of facilities or devices.

Section 3. The qualifications for the consultant will include, without limitation, demonstrated competence and experience in planning, specifically in the area of telecommunications; familiarity and experience in working with the Telecommunications Act of 1996; performance of services primarily on behalf of a local governmental entity; and ability to perform and complete services within a four month period after notification to proceed.

Section 4. Effective date.

This resolution shall take effect immediately upon adoption.

DULY PASSED AND ENACTED by the Council of the City of Sanibel, Lee County, Florida, this 6th day of April, 1999.

AUTHENTICATION:

Mayor

City Clerk

APPROVED AS TO FORM: _____ City Attorney

4/7/99 Date

Vote of Council members:

Brown	Aye
Hillebrandt	Aye
Janes	Aye
Reding	Aye
Theiss	Aye

Date filed with City Clerk: 4/8/99

RES-TELECOMMUNICATIONSPLANNER.ORD24

Item 9: Discussion and consideration of Consent Agenda items pulled. - Items 8a and 8c were pulled, discussed and approved as amended.

Item 11: City Manager/City Attorney's Report

Item 11a: Consideration of A RESOLUTION PERTAINING TO WASTEWATER; AUTHORIZING THE CITY MANAGER TO ENTER INTO CONTRACT NEGOTIATIONS WITH THE TOP-RANKED FIRM FOR ENGINEERING SERVICES FOR A REUSE ENGINEERING REPORT AND FOR ISLAND WIDE PERMITTING; AND PROVIDING AN EFFECTIVE DATE.

City Manager Pritt read the title and reviewed his April 6 memo. Staff recommended the firm of Dames & Moore to look at island wide reuse of reclaimed water, and pointed out the need for a permit that will allow the City to identify what other uses we might want besides golf courses. He reported that the Wastewater Research Committee agrees the City should get a reuse report as soon as possible. **Vice Mayor Reding moved approval, Councilmember Theiss seconded and the resolution was adopted by unanimous vote.**

Item 11b: Steward Claims Bill

City Manager Pritt reported a reasonable settlement was reached, the documents have been signed and the matter will no longer be a liability of the City's financial statement.

As an additional item, there was discussion of the Planning Commission vacancy left by the election of Bill Hillebrandt to the City Council. It was agreed the 1 ½ year term should be advertised, interviews conducted and the appointment made at the May 4 Council meeting.

The City Manager also reported that because the deadline was too early to allow for Council consideration, staff had submitted the Tourist Development Council (TDC) funding request.

The City Manager advised that South Florida Water Management District (SFWMD) water restrictions will be put into effect shortly. He noted the Sanibel ordinance implements the SFWMD plan as well as Sanibel's permanent water restrictions.

Item 10: Continued Reading and Public Hearing of AN ORDINANCE RELATING TO TELECOMMUNICATIONS; AMENDING SUBSECTION I.B.2.c. OF THE LAND DEVELOPMENT CODE OF THE CITY OF SANIBEL TO DELETE THE DEFINITION OF EARTH STATION; AMENDING SUBSECTION I.C.1.c. BY ADDING AN OVERLAY DISTRICT MAP ESTABLISHING PERMITTED USE DISTRICTS FOR TELE-COMMUNICATIONS DEVICES; AMENDING SECTION I.E.10., HEIGHT EXCEPTIONS, OF THE LAND DEVELOPMENT CODE; AMENDING SECTION I.E.32 TO REFLECT CHANGES MADE NECESSARY BY THE TELECOMMUNICATIONS ACT OF 1996; PROVIDING REGULATIONS ON TELECOMMUNICATIONS DEVICES; AMENDING SECTIONS III.C.2. TO PROVIDE

VARIANCE STANDARDS FOR TELECOMMUNICATIONS DEVICES; AMENDING SECTION VII.B.2., VII.B.3., VII.B.6. AND VII.D.3. TO ESTABLISH APPLICATION FEES FOR TELECOMMUNICATIONS DEVICES; PROVIDING FOR CODIFICATION; PROVIDING FOR CONFLICT AND SEVERANCE; AND PROVIDING AN EFFECTIVE DATE.

The City Manager read the title. Planning Director Bruce Rogers referred Council to draft #15, and explained staff's objective was to provide Council with enough information to provide staff with the guidance necessary to make required revisions to the ordinance. Council had been given letters from providers; Director Rogers advised that representatives of each of Sanibel's providers were present and would like to address Council. Director Rogers reviewed the Assumptions, Policies and Objectives of the ordinance. Michael Kurtis, the City's consultant, discussed what is required for wireless carriers to provide the service. Director Rogers then began review of a document entitled "Components of the Master Planning for the Preparation of Proposed Telecommunications Regulations (Master Plan)", which was done in response to City Council's March 2 direction. He explained that staff hoped to get policy direction from Council today to proceed with finalizing both the Master Plan and the ordinance. Councilmember Brown questioned whether the Master Plan and ordinance could be done simultaneously, suggesting a Master Plan should be done first. Director Rogers continued with review of the Master Plan, referring Council to the *List of Cell Site Opportunities (*types of sites, advantages and disadvantages), which led to extensive discussion of height requirements, permitting options and uses in residential areas.

Director Rogers then began a creative PowerPoint presentation regarding existing structures. He displayed Map A, cell site opportunities for facilities that, when mounted on existing structures, may extend up to 45' MSL (above mean sea level); Map B, opportunities for facilities that, if the need is clearly demonstrated, may extend up to 80'AGL (above ground level); and Map C, opportunities for facilities that, if the need is clearly demonstrated, may extend up to 150' AGL. He pointed out Map B was purposely not colored and no site identified; it was included to show that preferred locations for sites up to 80 feet would have to be identified in draft #15. Mr. Kurtis displayed and described various types of substantial ground-based equipment that carriers would have to install at the base of their towers. Vice Mayor Reding pointed out that consultant Ted Kreines had indicated smaller equipment could be used, and reiterated previous emphasis on the need for balanced testimony. He concluded there were too many unanswered questions and agreed with Councilmember Brown's recommendation for development of a comprehensive Master Plan first. In response to further Council inquiries, Director Rogers and Mr. Kurtis explained the components of the Master Plan drive the ordinance; the documents are consistent but both require some refinement. Mayor Janes and Councilmember Theiss commented it was time to get opinions from representatives of the telecommunications industry, but Vice Mayor Reding argued that while the providers need input, a more logical process would be to have an independent expert who doesn't come from the perspective of working for telephone companies, and to do so in the context of having an already developed Master Plan. City Manager Pritt pointed out this was a public hearing and any member of the public has a right to speak. Mayor Janes called for public comment.

Louise Johnson and Phyllis Bogen agreed with the need to get on with the Master Plan, with testimony from all sources, including a radio frequency engineer if necessary.

Several telecommunications industry representatives were present: Russell Schropp for Sprint PCS; attorney Steven Hartsell for Bell South; Laura Bellflower for NEXTEL, and attorney Matt Uhle. The representatives all expressed their concerns regarding the new ordinance, including: no consideration of effects of vegetation nor where facilities need to be placed for optimum efficiency; 45' height limitation not acceptable--it will make collocation possibilities impossible, resulting in more sites; space constraints in rights of ways; significantly increased costs; and nonconforming/grandfathering issues. The carriers' representatives urged Council to go back to the original proposal. In response to City Manager Pritt, Mr. Schropp stated that each carrier will need three sites with 165' towers. Councilmembers questioned cost estimates and there was general agreement that more details were required to make cost determinations. Laura Bellflower, representing NEXTEL, concluded that if the draft #15 approach is followed, carriers will have three options: conform, leave or sue. Mr. DeLeroche, Sprint, provided additional information on technical questions. Tiffany Whitman, Goff Communications, commented that not only have the telecommunications companies been patient, customers have been patient also. She submitted letters from 40 customers stating their need for better radio-cellular coverage on Sanibel.

Hal Theiss, husband of Councilmember Nola Theiss, who had been invited by Council to comment because of his experience in radio wave propagation, agreed that the 45' height was not appropriate to provide adequate service for cellular phones. He suggested employment of directional antennas, and that it might be possible to place them on power lines in the Pine Island Sound. Ken Simmons, Lee County Electric Cooperative, said he did not think this was a viable option because of problems getting power to the antennas. Mr. Kurtis, however, countered that the directional antenna approach was feasible depending on where placed and where they come ashore. This was followed by further discussion of various technical and legal issues.

The meeting was recessed for lunch and called back to order at 2:40. There were about 35 members of the public present. Public comment continued.

Degnan Walker read into the record a lengthy presentation of material (Council members had been provided a written copy) from John LaGorce which set the stage for both a rational and legal basis for a Moratorium.

Several other members of the public spoke in support of the moratorium: Janet Walker, Mike Gillespie, Wayne Ponader, and Henry Glissman.

Back to Council, Councilmember Brown supported getting a second opinion for two reasons: to get on the right course if we're not, and, if we are on the right course, to get it confirmed. He wished to proceed with the resolutions calling for a second opinion and a 180-day moratorium. City Manager Pritt confirmed there was no problem discussing the proposed resolutions at this time.

Item 13: Councilmembers' Comments

Item 13a: Consideration of A RESOLUTION PERTAINING TO TELE-COMMUNICATIONS; DIRECTING THE CITY MANAGER FORTHWITH TO PREPARE AND SUBMIT FOR CONSIDERATION AN ORDINANCE IMPLEMENTING A MORATORIUM ON PROCESSING OR APPROVAL OF APPLICATIONS FOR CERTAIN TELECOMMUNICATIONS DEVICES

AND FACILITIES; DECLARING THAT A MORATORIUM ON SAME IS PENDING AND IS ZONING IN PROGRESS; DIRECTING THE CITY MANAGER TO PUBLISH AND POST A NOTICE OF PENDENCY; REQUESTING THE PLANNING COMMISSION TO EXPEDITE REVIEW AND RECOMMENDATION OF SUCH ORDINANCE; AND PROVIDING AN EFFECTIVE DATE.

City Manager Pritt read the titles of items 13a and 13b. He recommended Council make certain the WHEREAS clauses represent the action they may wish to take. Councilmember Brown moved approval of the resolution for a 180-day moratorium. Vice Mayor Reding seconded. In response to Mayor Janes, City Manager Pritt addressed the differences in the Notice of Pendency and Moratorium. He also explained a moratorium will have to go through the normal Planning Commission and City Council process, as required by state law for all zoning matters. The next step will be to draft a moratorium ordinance. If the whole 180 days is not needed, Council can lift the moratorium. Councilmember Theiss preferred to continue to work out policy guidelines and believed that with the Notice of Pendency in place, the moratorium was not necessary. Mayor Janes agreed, suggesting staff's having to work on the moratorium might slow up the process. Following further clarification that the ordinance would take minimal staff time, Councilmember Hillebrandt concluded that the moratorium could be put in place, and work on the ordinance and Master Plan could proceed simultaneously.

Planning Director Rogers asked for clarification as to exactly what Council intended with regard to Section 1 of the resolution; does the moratorium cover an application to install an antenna on an existing tower above 45'? City Manager Pritt opined Section 1 does not cover that. Councilmembers Brown and Reding, however, thought the moratorium should cover such applications, and additional language was suggested by Councilmember Hillebrandt, adding after construction, "or installation." Vice Mayor Reding suggested additional language, "which entail installation of any device above 45' in height." Director Rogers stated that he thinks the moratorium is unnecessary and exposes the City to potential liability. He pointed out a permit was issued in July for Primeco, but with proposed language he could not process a similar application, which he said was not in the City's best interest. Vice Mayor Reding argued that there was no indication of cities getting in trouble for implementing a moratorium, but Director Rogers reiterated his concerns with granting a permit for over 45' during a Notice of Pendency, asking again if Council was sure they did not want to grant that kind of application.

Councilmember Theiss expressed her opinion that Council was being alarmist, that the telecommunications companies want to make money and provide service in accordance with the City's ordinance, which she believed was possible to achieve with continued work. Vice Mayor Reding recommended additional revised language, "which entail construction of any tower, or installation of any commercial device, above 45' in height." Councilmember Hillebrandt moved to amend the resolution as such, and Vice Mayor Reding seconded. Mr. Kurtis stated he would have some concern that if the primary basis for 45' is aesthetics, Council would have to set forth on the record the basis on which it allowed other carriers to add on to an existing structure. Director Rogers reported that he has scheduled an appointment for such an application, and Mr. Kurtis pointed out that carriers were advised to come in and discuss modifying existing structures. Mayor Janes called for further public comment.

Attorney Steven Hartsell encouraged Council not to revise the resolution and suddenly say carriers could not use existing towers, which would serve only to put carriers at financial disadvantage.

Resident Dick Walsh said it would be a mistake not to follow Mr. Kurtis's advice; he agreed the prohibition should be placed only on new construction. Wayne Ponader also agreed Mr. Kurtis's opinion was valid. Vice Mayor Reding, however, argued against allowing the upgrading of nonconforming structures.

City Manager Pritt pointed out an attorney for a provider, the City's consultant and two retired attorneys (Walsh and Ponader) who are aligned with residents have all expressed the same concerns as expressed by Director Rogers. Following further discussion and advice from Mr Kurtis that he would feel more comfortable if the moratorium didn't address existing structures, Councilmembers Hillebrandt and Reding withdrew their motion for a change in Section 1. wording.

Director Rogers confirmed his understanding that Council's intent is that the moratorium affects only new construction of support towers, not attachment to an existing tower. Vice Mayor Reding, however, noted that he did not intend that direction to be blanket approval of any collocation. **Councilmember Brown reiterated his earlier motion to approve the resolution as written. Vice Mayor Reding seconded. The resolution passed by a vote of 3-2, with Councilmembers Janes and Theiss dissenting.**

Item 13b: Consideration of A RESOLUTION DIRECTING THE CITY MANAGER TO SOLICIT PROPOSALS FOR PROFESSIONAL CONSULTING SERVICES FOR ASSISTANCE IN THE DEVELOPMENT OF A MASTER PLAN FOR TELECOMMUNICATION FACILITIES OR DEVICES; PROVIDING A SCOPE OF SERVICES; PROVIDING CERTAIN QUALIFICATIONS; AND PROVIDING AN EFFECTIVE DATE.

The title had already been read. City Manager Pritt pointed out the resolution did not call for a radio frequency engineer. Discussion followed as to whether the description should include an engineer.

From the public, Laura Bellflower, NEXTEL, pointed out the importance of hiring someone with experience on behalf of or in conjunction with providers.

Councilmember Theiss agreed a consultant would have to know what's going on in the industry, and that the description should require technical expertise as opposed to planning. Also, consultants who have worked for the industry should not be excluded. Councilmember Brown moved approval. Vice Mayor Reding said he had questions regarding the language, but seconded for purposes of discussion.

During further discussion, **Council indicated agreement to resident Dick Walsh's recommendation to delete "lack of" from "lack of performance of services primarily on behalf of applicants" in Section 3, qualifications for consultant. Councilmember Hillebrandt recommended adding "familiarity and experience working with the Telecommunications Act of 1996.","and also adding "ability to perform <u>and complete services."</u>** He pointed out hiring a planner would give Director Rogers more time to continue work on the ordinance. Councilmembers Reding and Theiss still believed there should be a reference to technical expertise; Vice Mayor Reding favored someone with Sanibel's values but with technical qualifications, and Councilmember Theiss favored a planner with technical knowledge who can give Council information it does not have. **Councilmember Brown moved to adopt the resolution as amended. Councilmember Hillebrandt seconded and the motion was approved by unanimous vote, with Councilmember Theiss adding that while she would support the motion, she did not believe a planner is really what Council needs.**

Council then discussed how, in light of the moratorium and second opinion, to proceed with the telecommunications ordinance. **Councilmember Theiss moved to continue to a date uncertain. Councilmember Brown seconded.** Vice Mayor Reding asked for further discussion, and stated he had hoped for more discussion to give further Council direction to staff. **The motion to approve passed by a vote of 4-1, with Vice Mayor Reding dissenting.**

Item 14: Continued Public Hearings

Item 14a: Consideration of A RESOLUTION PERTAINING TO THE SANIBEL CAUSEWAY; ADOPTING AND APPROVING A REPORT ON REVISIONS TO LEE COUNTY'S DRAFT EXHIBIT E DATED NOVEMBER 5, 1998 CALLED "PROJECT GUIDELINES AND CRITERIA FOR SANIBEL CAUSEWAY IMPROVEMENTS"; DIRECTING THE CITY MANAGER TO TRANSMIT SAME TO THE LEE COUNTY BOARD OF COUNTY COMMISSIONERS; AND PROVIDING AN EFFECTIVE DATE.

City Manager Price read the title. City Manager Pritt explained that Exhibit E had been revised as directed by Council. Mayor Janes questioned references to rebuilding "in place" in Alternative C, and it was agreed all references to "in place" would be changed to "in kind." Councilmember Brown questioned the second WHEREAS clause and, following further discussion and input from residents Peter Pappas, Irv Stein and Dick Walsh, it was agreed to change the second WHEREAS clause to read, "WHEREAS, Lee County has recognized the validity of such participation;" Vice Mayor Reding recommended a third WHEREAS, Sanibel believes the Greiner Report that served as a rationale for the Project Development & Environmental Report (PD&E) was based on a set of assumptions that are unacceptable to the majority of residents of Sanibel and to their elected representatives, that it is premature to proceed with the PD&E, we nonetheless make the following recommendations as to how the PD&E should be structured, should the Lee County Board of Commissioners elect to proceed with the PD&E at this point." Other Councilmembers supported the proposed addition, and at Councilmember Hillebrandt's recommendation, also agreed it should be repeated in Exhibit E under Proposal. **Vice Mayor Reding moved to adopt as amended. Councilmember Hillebrandt seconded and the motion was approved by unanimous vote.**

Item 14: Consideration of A RESOLUTION ACCEPTING AND APPROVING A FACT FINDING REPORT – SANIBEL CAUSEWAY AND BRIDGES, PRESENTED BY THE SANIBEL PLANNING COMMISSION; ADOPTING CERTAIN AMENDMENTS TO THE REPORT; DIRECTING THE CITY MANAGER TO TRANSMIT THIS RESOLUTION AND REPORT TO THE LEE COUNTY BOARD OF COUNTY COMMISSIONERS; AND PROVIDING AN EFFECTIVE DATE.

City Manager Pritt read the title. Councilmember Hillebrandt pointed out there are still questions that need to be answered. Vice Mayor Reding preferred to continue the resolution for further revision, especially in light of the communication from Lee County consultant Chris Cella which he said challenges the validity of Sanibel's referendum and again brings out the fact that Lee County is not neutral. He noted the importance of making sure all the facts in the report support the City's position, and wished to make the

000062

Item 9: Discussion and consideration of Consent Agenda items pulled. - Items 8a and 8c were pulled, discussed and approved as amended.

Item 11: City Manager/City Attorney's Report

Item 11a: Consideration of A RESOLUTION PERTAINING TO WASTEWATER; AUTHORIZING THE CITY MANAGER TO ENTER INTO CONTRACT NEGOTIATIONS WITH THE TOP-RANKED FIRM FOR ENGINEERING SERVICES FOR A REUSE ENGINEERING REPORT AND FOR ISLAND WIDE PERMITTING; AND PROVIDING AN EFFECTIVE DATE.

City Manager Pritt read the title and reviewed his April 6 memo. Staff recommended the firm of Dames & Moore to look at island wide reuse of reclaimed water, and pointed out the need for a permit that will allow the City to identify what other uses we might want besides golf courses. He reported that the Wastewater Research Committee agrees the City should get a reuse report as soon as possible. **Vice Mayor Reding moved approval, Councilmember Theiss seconded and the resolution was adopted by unanimous vote.**

Item 11b: Steward Claims Bill

City Manager Pritt reported a reasonable settlement was reached, the documents have been signed and the matter will no longer be a liability of the City's financial statement.

As an additional item, there was discussion of the Planning Commission vacancy left by the election of Bill Hillebrandt to the City Council. It was agreed the 1 ½ year term should be advertised, interviews conducted and the appointment made at the May 4 Council meeting.

The City Manager also reported that because the deadline was too early to allow for Council consideration, staff had submitted the Tourist Development Council (TDC) funding request.

The City Manager advised that South Florida Water Management District (SFWMD) water restrictions will be put into effect shortly. He noted the Sanibel ordinance implements the SFWMD plan as well as Sanibel's permanent water restrictions.

Item 10: Continued Reading and Public Hearing of AN ORDINANCE RELATING TO TELECOMMUNICATIONS; AMENDING SUBSECTION I.B.2.c. OF THE LAND DEVELOPMENT CODE OF THE CITY OF SANIBEL TO DELETE THE DEFINITION OF EARTH STATION; AMENDING SUBSECTION I.C.1.c. BY ADDING AN OVERLAY DISTRICT MAP ESTABLISHING PERMITTED USE DISTRICTS FOR TELE-COMMUNICATIONS DEVICES; AMENDING SECTION I.E.10., HEIGHT EXCEPTIONS, OF THE LAND DEVELOPMENT CODE; AMENDING SECTION I.E.32 TO REFLECT CHANGES MADE NECESSARY BY THE TELECOMMUNICATIONS ACT OF 1996; PROVIDING REGULATIONS ON TELECOMMUNICATIONS DEVICES; AMENDING SECTIONS III.C.2. TO PROVIDE

VARIANCE STANDARDS FOR TELECOMMUNICATIONS DEVICES; AMENDING SECTION VII.B.2., VII.B.3., VII.B.6. AND VII.D.3. TO ESTABLISH APPLICATION FEES FOR TELECOMMUNICATIONS DEVICES; PROVIDING FOR CODIFICATION; PROVIDING FOR CONFLICT AND SEVERANCE; AND PROVIDING AN EFFECTIVE DATE.

The City Manager read the title. Planning Director Bruce Rogers referred Council to draft #15, and explained staff's objective was to provide Council with enough information to provide staff with the guidance necessary to make required revisions to the ordinance. Council had been given letters from providers; Director Rogers advised that representatives of each of Sanibel's providers were present and would like to address Council. Director Rogers reviewed the Assumptions, Policies and Objectives of the ordinance. Michael Kurtis, the City's consultant, discussed what is required for wireless carriers to provide the service. Director Rogers then began review of a document entitled "Components of the Master Planning for the Preparation of Proposed Telecommunications Regulations (Master Plan)", which was done in response to City Council's March 2 direction. He explained that staff hoped to get policy direction from Council today to proceed with finalizing both the Master Plan and the ordinance. Councilmember Brown questioned whether the Master Plan and ordinance could be done simultaneously, suggesting a Master Plan should be done first. Director Rogers continued with review of the Master Plan, referring Council to the *List of Cell Site Opportunities (*types of sites, advantages and disadvantages), which led to extensive discussion of height requirements, permitting options and uses in residential areas.

Director Rogers then began a creative PowerPoint presentation regarding existing structures. He displayed Map A, cell site opportunities for facilities that, when mounted on existing structures, may extend up to 45' MSL (above mean sea level); Map B, opportunities for facilities that, if the need is clearly demonstrated, may extend up to 80'AGL (above ground level); and Map C, opportunities for facilities that, if the need is clearly demonstrated, may extend up to 150' AGL. He pointed out Map B was purposely not colored and no site identified; it was included to show that preferred locations for sites up to 80 feet would have to be identified in draft #15. Mr. Kurtis displayed and described various types of substantial ground-based equipment that carriers would have to install at the base of their towers. Vice Mayor Reding pointed out that consultant Ted Kreines had indicated smaller equipment could be used, and reiterated previous emphasis on the need for balanced testimony. He concluded there were too many unanswered questions and agreed with Councilmember Brown's recommendation for development of a comprehensive Master Plan first. In response to further Council inquiries, Director Rogers and Mr. Kurtis explained the components of the Master Plan drive the ordinance; the documents are consistent but both require some refinement. Mayor Janes and Councilmember Theiss commented it was time to get opinions from representatives of the telecommunications industry, but Vice Mayor Reding argued that while the providers need input, a more logical process would be to have an independent expert who doesn't come from the perspective of working for telephone companies, and to do so in the context of having an already developed Master Plan. City Manager Pritt pointed out this was a public hearing and any member of the public has a right to speak. Mayor Janes called for public comment.

Louise Johnson and Phyllis Bogen agreed with the need to get on with the Master Plan, with testimony from all sources, including a radio frequency engineer if necessary.

Several telecommunications industry representatives were present: Russell Schropp for Sprint PCS; attorney Steven Hartsell for Bell South; Laura Bellflower for NEXTEL, and attorney Matt Uhle. The representatives all expressed their concerns regarding the new ordinance, including: no consideration of effects of vegetation nor where facilities need to be placed for optimum efficiency; 45' height limitation not acceptable--it will make collocation possibilities impossible, resulting in more sites; space constraints in rights of ways; significantly increased costs; and nonconforming/grandfathering issues. The carriers' representatives urged Council to go back to the original proposal. In response to City Manager Pritt, Mr. Schropp stated that each carrier will need three sites with 165' towers. Councilmembers questioned cost estimates and there was general agreement that more details were required to make cost determinations. Laura Bellflower, representing NEXTEL, concluded that if the draft #15 approach is followed, carriers will have three options: conform, leave or sue. Mr. DeLeroche, Sprint, provided additional information on technical questions. Tiffany Whitman, Goff Communications, commented that not only have the telecommunications companies been patient, customers have been patient also. She submitted letters from 40 customers stating their need for better radio-cellular coverage on Sanibel.

Hal Theiss, husband of Councilmember Nola Theiss, who had been invited by Council to comment because of his experience in radio wave propagation, agreed that the 45' height was not appropriate to provide adequate service for cellular phones. He suggested employment of directional antennas, and that it might be possible to place them on power lines in the Pine Island Sound. Ken Simmons, Lee County Electric Cooperative, said he did not think this was a viable option because of problems getting power to the antennas. Mr. Kurtis, however, countered that the directional antenna approach was feasible depending on where placed and where they come ashore. This was followed by further discussion of various technical and legal issues.

The meeting was recessed for lunch and called back to order at 2:40. There were about 35 members of the public present. Public comment continued.

Degnan Walker read into the record a lengthy presentation of material (Council members had been provided a written copy) from John LaGorce which set the stage for both a rational and legal basis for a Moratorium.

Several other members of the public spoke in support of the moratorium: Janet Walker, Mike Gillespie, Wayne Ponader, and Henry Glissman.

Back to Council, Councilmember Brown supported getting a second opinion for two reasons: to get on the right course if we're not, and, if we are on the right course, to get it confirmed. He wished to proceed with the resolutions calling for a second opinion and a 180-day moratorium. City Manager Pritt confirmed there was no problem discussing the proposed resolutions at this time.

Item 13: Councilmembers' Comments

Item 13a: Consideration of A RESOLUTION PERTAINING TO TELE-COMMUNICATIONS; DIRECTING THE CITY MANAGER FORTHWITH TO PREPARE AND SUBMIT FOR CONSIDERATION AN ORDINANCE IMPLEMENTING A MORATORIUM ON PROCESSING OR APPROVAL OF APPLICATIONS FOR CERTAIN TELECOMMUNICATIONS DEVICES

Eileen Lotts who drafted the City's charter. **Consensus was to start the 25th Anniversary the weekend of November 5 and continue the celebration through December 10, urging local groups and organizations to sponsor events during that period.**

Item 8d: Approval of Summer Meeting Schedule and FY 1999/2000 Budget Calendar

City Manager Pritt explained that Council has traditionally cancelled summer meetings, which gives staff a chance to do catch-up work and take vacations. The recommendation was to cancel the first meeting in July (July 6) and the second meeting in August (August 17). He pointed out Council can schedule special meetings if necessary. Finance Director Renee Lynch reviewed the proposed budget calendar, pointing out the proposed dates of Saturday, September 18 at 9:00 a.m. for the first public hearing and Tuesday, September 28 at 5:01 p.m. for the second and final budget hearing. The City Manager and Finance Director provided rationale for proposed dates. **Councilman Hillebrandt moved and Councilman Brown seconded to approve the proposed schedules: July 6 and August 17 regular Council meetings cancelled; first public hearing for budget at 9:00 a.m. on Saturday, September 18; second and final public hearing on Tuesday, September 28 at 5:01 p.m. The motion was approved by unanimous vote.**

As an additional item, it was agreed the procedure for selection of a new City Manager will be scheduled for discussion on the May 4 Council agenda. Selection of a new Planning Commissioner (to fill the unexpired term of Bill Hillebrandt) will also be scheduled for May 4.

The meeting was recessed for lunch at 11:35 a.m. and called back to order at 1:40 p.m. There were several items of discussion prior to the hearing scheduled for 2:00 p.m.

In response to Council inquiry, Planning Director Bruce Rogers reported that the request for proposal (RFP) for a second opinion on telecommunications has been sent to an appropriate mailing list and published in the *Ft. Myers News Press*. City Manager Pritt requested that the RFP also be placed on the City's web site. The deadline for receipt of proposals is May 19, at which time the process will be turned over to Council to select the consultant.

There was discussion of Sanibel's request for a change in the Lee County Plan policy that prohibits replacement drawbridges, which will be considered by the Lee County Local Planning Authority on April 26. The indication is that Lee County staff will recommend against the requested revision. Vice Mayor Reding reported on his discussion with Lee County officials and their requests for transcripts of testimony from a Planning Commission causeway workshop regarding hurricane evacuation. Director Rogers explained further the status of the requested transcripts. Director Bruce Rogers and Assistant Planning Director Ken Pfalzer explained they have been in touch with Lee County staff regarding Sanibel's request, and that Ken Pfalzer would be the City's representative at the April 26 meeting.

City Manager Pritt reported the good news that Island Water Association (IWA) has received a draft notice approving its request for a permit for a deep injection well.

He also recommended Councilmembers attend a seminar on "Municipal Elected Officials" sponsored by the Florida League of Cities, scheduled for July 9-11 at Diamond Head Resort on Ft. Myers Beach.

RESOLUTION NO. 99 - 17

CITY OF SANIBEL

PLANNING COMMISSION

IN THE MATTER OF: City of Sanibel

APPLICANT: City of Sanibel

APPLICATION NO: Moratorium Ordinance on Telecommunication Devices and Facilities

CONCLUSION OF HEARING: April 27, 1999

ADOPTION OF RESOLUTION: April 27, 1999

WHEREAS, the City of Sanibel has submitted a proposed ordinance declaring a moratorium on processing or approval of applications for certain telecommunications devices and facilities; and

WHEREAS, a public hearing was legally and properly advertised and held on April 27, 1999, on the proposed ordinance before the Sanibel Planning Commission; and

WHEREAS, the ordinance has been considered by the Planning Commission and the public hearing for consistency with the Land Development Code; and

WHEREAS, the Planning Commission made the following conclusion of law that the proposed ordinance is consistent with the Land Development Code.

NOW, THEREFORE, BE IT RESOLVED by the Planning Commission that it recommends **APPROVAL** of a proposed ordinance entitled (CA793, Draft No. 2, 4/8/99):

> "AN ORDINANCE PERTAINING TO TELECOMMUNICATIONS; DECLARING A MORATORIUM ON PROCESSING OR APPROVAL OF APPLICATIONS FOR CERTAIN TELECOMMUNICATIONS DEVICES AND FACILITIES; PROVIDING FOR CONFLICT AND SEVERANCE; AND PROVIDING AN EFFECTIVE DATE."

BE IT FURTHER RESOLVED, that the Planning Commission for informational purposes wanted to inform City Council that it is possible that fiber optic cable connections may be installed in connection with Lee County Co-op's construction project.

The foregoing Resolution was adopted by the Planning Commission upon a motion by Planning Commission Member Phyllis Bogen, and seconded by Planning Commission Member Judith Workman, and the vote was as follows:

John Veenschoten	aye	Richard H. Downes	aye
Steven Greenstein	no	Martin Harrity	aye
Phyllis Bogen	aye	Judith Workman	aye

DULY PASSED AND ADOPTED this 27th day of April, 1999.

SANIBEL PLANNING COMMISSION

Signed: _____ Date signed: 5/3/99
Chairman

Date filed with City Manager: 5/3/99
Filing Date

Sanibel; amending Section I.E.14. of the Land Development Code of the City of Sanibel, General Outdoor Lighting and Lighting for Turtle Protection, by amending Subsection I.E.14.a., definitions; deleting current Subsection I.E.14.b. and replacing it with a new Subsection I.E.14.b. to provide for standards for lighting to promote dark skies and to reduce glare and light trespass; creating a new Subsection I.E.14.e., interpretations; amending Subsection I.E.18.i.(3) to provide for time for compliance of nonconforming signs; amending Subsection I.E.18.k.(3) to provide illumination standards; deleting the schematic for illumination standards contained in Figure I.E.18.H. of the Appendix to Section I.E.18.; providing for violations and enforcement; amending Section I.E. 28. by deleting Subsection i. and renumbering the subsections thereafter; amending Section III.B.3. by clarifying development permit filing procedures for outdoor lights; providing for codification; providing for conflict and severance; and providing an effective date. Submitted by the ***City of Sanibel. Application no. 98-206 LDC.***

Ken Pfalzer read the item title. Attorney Beverly Grady cited the legal considerations. Vice Mayor Andrew Reding [ordinance sponsor] presented the draft ordinance. Carol Stewart introduced herself, Ken Donahue, and Alex Kish as amateur astronomers who belong to the Southwest Florida Astronomical Society and the International Dark Sky Association. Ms. Stewart spoke on light pollution Mr. Donahue then gave video tape and slide presentations on light pollution. Discussion ensued. ***(Begin side 5)*** Mr. Reding stressed that the intent of the ordinance is to *darken the sky* [not the ground] and to encourage correct lighting which is not wasteful. Mr. Reding continued citing wasteful lighting issues on Sanibel, and then examples of the City's efforts to eliminate light pollution and the resulting benefits. Discussion ensued regarding whether the proposed ordinance would intrude into personal rights, gaining compliance of Lee County Electric Co-operative's security light fixtures, and guidelines for administering outdoor lighting. ***(Begin side 6.)*** Discussion then turned to neighborly cooperation. Mr. Pfalzer presented the staff report. Code Enforcement Officer Ray Hendzel fielded questions regarding pertinent enforcement issues. Discussion followed regarding commercial lighting issues.

Persons providing public comment were: Chip Carter/Island Designs Sign Company, ***(Begin side 7)*** Keith Trowbridge, John Jensen, Larry Bator, Dick Walsh, Carlene Brennen, ***(Begin Side 8)*** Barbara Priborsky, and Rhonda Henning. Issues of concern expressed by the public included security, safety, possible inconveniences, possible loss of advertising, and the expense issues. After public comment concluded, the following motion was made:

***Motion*: Commissioner Bogen moved to continue by resolution, the public hearing on Application No. 98-206 LDC to May 11, 1999 at 9:15 a.m. in order to address concerns and issues expressed by the public and staff. Vice Chairman Downes seconded the motion which carried 6-0.**

ITEM #7: *Consideration of an ordinance pertaining to* ***telecommunications; implementing a moratorium*** *on processing or approval of applications for certain telecommunications devices and facilities; providing for conflict and severance; and providing an effective date. Submitted by the* ***City of Sanibel.***

Ken Pfalzer read the item title. Attorney Beverly Grady cited the legal considerations. Mr. Pfalzer presented the staff report and urged the Planning Commission to recommend that Council exempt the work being done by the Lee County Electric Cooperative (transmission line upgrade to incorporate Fiberoptic lines for Sprint) that might be affected by the moratorium.

Public comment was provided by: journalist Fran Nuelle, ***(Begin Side 9)*** Council member Stephen Brown, Attorney Steve Hartsell, and Dick Walsh. Mr. Hartsell [on behalf of BellSouth and Russell Schropp who is representing Sprint PCS] read a letter from Mr. Schropp to City Attorney Bob Pritt requesting their application be allowed to continue through the process under the current regulations. Discussion followed. Ms. Grady provided clarifications of the process and procedure(s). Upon conclusion of discussion(s), the following motion was made:

Motion: **Commissioner Workman moved to close the public hearing, and directed the Planning Commission Attorney to prepare a resolution recommending approval to the City Council of Application No. 98-206 LDC with recommendation to consider exempting work by the Lee County Electric Cooperative (as part of the Co-op's Transmission Line Upgrade Project to incorporate Fiber-optic lines for Sprint) which might be affected by the moratorium. Commissioner Bogen seconded the motion which carried *6-1 with Commissioner Greenstein voting no.***

ITEM #8: *Discussion as to the feasibility of Planning Commission inquiry into the impact of* ***"Ecotourism"*** *on the Sanibel way of life and whether or not it is the proper subject matter for the Planning Commission, and if so, to what degree.*

Due to the lateness of the hour, this item was continued.

ITEM #13: ***Open discussion*** *among Planning Commissioners regarding Commission Functions and Goals and the methods and procedures for achieving them.* Due to the lateness of the hour, there was no open discussion.

Respectfully submitted,

Bruce A. Rogers, Planning Director

Item 3a: Consideration of A RESOLUTION URGING THE SOUTH FLORIDA WATER MANAGEMENT DISTRICT TO PROVIDE FOR CONTINUED FUNDING OF THE TARPON BAY ENVIRONMENTAL LABORATORY LOCATED ON SANIBEL ISLAND; DIRECTING THE CITY MANAGER TO TRANSMIT A COPY TO THE SOUTH FLORIDA WATER MANAGEMENT DISTRICT; AND PROVIDING AN EFFECTIVE DATE. (Councilmember Theiss)

City Manager Pritt read the title. Councilmember Theiss explained the importance of Council supporting the funding. **Vice Mayor Reding moved approval, Councilmember Theiss seconded and the resolution was adopted by unanimous vote.**

Item 3b: Negotiations for purchase of commercial properties at Periwinkle Way and Bailey Road. (Councilman Brown)

Councilman Brown referred to a letter from members of the Dunes Homeowners Association expressing their concerns with proposed development of the 43-acre parcel at the Northwest corner of Periwinkle Way and Bailey Road. He suggested it might be time for the City to take another look at possibilities for purchase of the property. Mayor Janes pointed out the only way this large expenditure could be approved was by bond referendum. Vice Mayor Reding said he would definitely not consider purchase at the current asking price, which was way over the appraisal. City Manager Pritt advised he would meet with the developers and update Council on the status of the project. Mayor Janes called for public comment.

John Ford, Vice President of the Dunes Homeowners Association, provided additional information on the property.

Dick Walsh suggested that, as a member of an organization that wants to develop the property (Sanibel Community Church), for City Manager Pritt to be involved in negotiations for the subject property would give the appearance of impropriety. The City Manager took strong exception to Mr. Walsh's remarks. Councilman Hillebrandt pointed out the City Manager is not being asked to negotiate but just to update Council and advise of possible courses of action.

Following further discussion, there was consensus to direct the City Manager to provide Council with an update on the project and possible courses of action.

Item 3c: Progress report on Pension (Councilman Brown)

Councilman Brown referred to his written report and explained the fact-finding process continues. He said, as Council liaison to the group conducting the pension plan review, he had emphasized that the resulting actions be a "win-win" outcome for both employees and Council, that not one single employee be hurt by the final decision and that all options be evaluated and considered.

Item 4: Planning Commission Report

Vice Chair Downes reported on the April 27 meeting. He said the Planning Commission had passed the resolution calling for an 180-day moratorium on the telecommunications ordinance, but had cautioned Council to consider whether Lee County Electric Cooperative's fiber-optic transmission line upgrade

project would be affected by the moratorium. Commissioner Downes also advised that the Planning Commission has cancelled the first meeting in July (July 13) and the second meeting in August (August 24).

Item 4a: Annual Review of the Capital Improvement Element of the Sanibel Plan.

Planning Commissioner Phyllis Bogen reviewed the report which Council was being asked to accept. Councilman Hillebrandt asked about the safety aspect of last year's recommendation to add vegetation to bikepaths. Upon clarification from Vice Mayor Reding that the vegetation was intended to help shield blinding headlights at night in areas like the bikepath to the school, Councilman Hillebrandt suggested this reasoning be specified in the recommendation. There was also discussion of the highlighted directive to "Consider development of a Town Center/Town Square in the area of City Hall, to serve as a focal point for community activities, special events and informal assembly." Councilmembers Theiss and Hillebrandt expressed concerns as to whether the Planning Department could take on a project of this magnitude at this time, and Commissioner Bogen explained the project was for future reference, included so it wouldn't just disappear. Planning Commission Vice Chair Dick Downes added that the directive was not intended as a task for the Planning Department, but just to provide the Planning Commission with background so they can explore from a planning standpoint to see if the project is feasible. **Councilman Brown moved to accept the report, Councilman Hillebrandt seconded and the motion was approved by unanimous vote.**

Item 5: Boards and Committees
Item 5a: Consideration of A RESOLUTION APPOINTING A MEMBER TO THE PLANNING COMMISSION FOR THE UNEXPIRED TERM OF WILLIAM HILLEBRANDT; AND PROVIDING AN EFFECTIVE DATE.

City Manager Pritt read the title and referred Council to an updated list of applicants. Mayor Janes explained the procedure—each Councilmember to write one name on an initialed ballot, with a majority of three votes needed to be elected. Upon a count of the first ballot by City Manager Pritt and Planning Commission Vice Chair Dick Downes, the following was announced: Jack Samler, 3 votes; Leslie Cook, 1 vote; and Esther Saltzman, 1 vote. **Vice Mayor Reding moved to appoint Jack Samler, Councilman Brown seconded, and the resolution appointing Jack Samler to fill the unexpired term (January 8, 2001) of Bill Hillebrandt was approved by unanimous vote.**

Item 5b: Consideration of A RESOLUTION APPOINTING A MEMBER TO THE VEGETATION COMMITTEE; AND PROVIDING AN EFFECTIVE DATE.

City Manager Pritt read the title and explained Council often goes by the recommendation of the Committee Chair for appointments, in this case to appoint Jan Rutledge. **Councilman Brown moved to appoint Jan Rutledge to the Vegetation Committee, Councilmember Theiss seconded, and the motion was approved by unanimous vote.**

lighting. Councilman Bill Hillebrandt pointed out that checking compliance with anything other than the existing lighting ordinance would be inappropriate and presumptive. City Manager Pritt suggested that staff could assist Council in deciding what they want to do on the issue, and consensus was to direct staff to prepare a work plan for Council consideration at the June 15 Council meeting.

Item 5: Boards and Committees
Item 5a: Consideration of A RESOLUTION APPOINTING MEMBERS TO THE SANIBEL HISTORICAL PRESERVATION COMMITTEE; AND PROVIDING AN EFFECTIVE DATE.

City Manager Pritt read the title. Mayor Janes explained the Historical Committee's recommendation is to appoint Terry Brennen and Muriel Veenschoten to fill two of the four vacant positions. Committee member Jody Brown explained that the two people recommended for appointment have worked at the Historical Museum and attended Committee meetings. Committee Chair Sam Bailey added the Committee would like to interview other candidates before appointing additional members. **Mayor Janes moved to appoint Terry Brennen and Muriel Veenschoten, Councilman Hillebrandt seconded and the resolution was adopted by unanimous vote.**

Item 5b: Consideration of A RESOLUTION ACCEPTING THE REPORT OF THE FIVE-YEAR BUDGET PROJECTION COMMITTEE; AND PROVIDING AN EFFECTIVE DATE.

City Manager Pritt read the title. Mayor Janes explained Council would only be accepting the report today, and that the acceptance does not indicate support for or against the report; the recommendations will be discussed in detail during the budget process. Armand Ball, Five-Year Budget Projection Committee Chair, complimented the work of the committee and the support provided by the city staff. He noted three minor corrections: page 12, #10, insert "That" before The; page 18, #19, change "intake" to "in the"; page 29, change Recommendation #35 to Recommendation #36. Chairman Ball reviewed the report briefly, noting recommendations #7, #19, #22 and #36 are not appropriate until a new City Manager is hired but the Committee thought they should be on record. He said the Committee hopes recommendations not related directly to the budget but to broader principles will also be considered by Council, as well as Appendix A, Five-Year Budget Projections, Fiscal Years 2000-2004. Council members thanked committee members and complimented their work. **Vice Mayor Reding moved approval of the resolution, Councilman Hillebrandt seconded, and the report was accepted by unanimous vote.**

Item 7: First Reading and Public Hearing of AN ORDINANCE PERTAINING TO TELECOMMUNICATIONS; DECLARING A MORATORIUM ON PROCESSING OR APPROVAL OF APPLICATIONS FOR CERTAIN TELECOMMUNICATIONS DEVICES AND FACILITIES; PROVIDING FOR CONFLICT AND SEVERANCE; AND PROVIDING AN EFFECTIVE DATE. (Submitted by the City of Sanibel)

City Manager Pritt read the title. He explained the nature of the ordinance with regard to Florida statutes requires two separate hearings, which have been/will be publicly noticed as required. Planning Director Bruce Rogers reviewed his April 22 memo and explained the Planning Commission had adopted by a 5-1 vote, Resolution 99-17 providing for a "moratorium on processing or approval of applications for telecommunications devices and facilities which entail construction of any new tower or facility exceeding 45' in height or which involve any increase in height of any existing tower or facility." Councilmembers questioned the Planning Commission's concern that the moratorium might cover Lee County Co-op's

000086

planned fiber optic cable connections, pointing out the ordinance definition clearly states "wireless". Director Rogers stated the Planning Commission wanted to bring it to Council's attention and that it would probably suffice if Council were to go on record to make clear the ordinance is not intended to cover Lee County Co-op's fiber optic construction. Mayor Janes called for public comment.

John LaGorce read and submitted for the record a statement in support of passing the Moratorium.

Russell Schropp, Sprint PCS, expressed concerns that after the six-month moratorium, Council would have an ordinance that would take another six months to adopt. He and Laura Bellflower, Nextel, asked if Council would consider replacement of the existing Sprint tower to a meaningful height as a short-term solution for service on Sanibel. Matt Uhle, representing Sprint FL, Inc., said the existing Sprint tower would have space for three additional providers by increasing the height to 180'. This led to further discussion of other possible short-term options.

Council discussion continued, with Councilmember Theiss explaining she had voted against the moratorium because she believed Council was headed in the right direction toward having a good ordinance and Council should have continued concentrating on a long-term solution; she said the moratorium feels like a stop sign. Mayor Janes agreed that the City had been close to having an ordinance acceptable to both the City and to providers, that the moratorium is sending the wrong message to providers and that he also would vote against the moratorium. Councilmen Hillebrandt and Brown argued the moratorium was not meant as a delaying tactic, that it was meant to set a specific deadline and that staff would continue working and come up with another ordinance as soon as possible. Vice Mayor Reding agreed the intent of the moratorium was not to delay or prevent service but to develop an ordinance in keeping with the island ambiance; he objected to any short-term exceptions. **Mayor Janes declared a First Reading and scheduled the Second Reading for June 1, 1999 at 10:00 a.m.**

Item 6: Planning Commission Report.

Planning Commission Chair John Veenschoten reported on the May 11 Planning Commission meeting.

CONSENT AGENDA

Item 8: Items pulled for discussion by Council or staff.

Vice Mayor Reding pulled item 9a.

Item 9: Approval of A RESOLUTION APPROVING AND ADOPTING ITEMS SET FORTH ON THE CITY COUNCIL CONSENT AGENDA; AND PROVIDING AN EFFECTIVE DATE.

Item 9a: Approval of Minutes - May 4, 1999 Meeting

Minor corrections were noted (delete reference to "traffic lights" and change invocation report) and upon motion by Vice Mayor Reding, seconded by Councilman Hillebrandt, the minutes were unanimously approved as amended.

Item 11d: Approval of A RESOLUTION APPROVING THE REVISED BEACH ROAD PAVING FUND FOR FISCAL YEAR 1998-1999; APPROVING BUDGET AMENDMENT 99-017; AND PROVIDING AN EFFECTIVE DATE.

Item 12: Discussion and consideration of Consent Agenda items pulled. – Item 11b was pulled and continued to the June 1 meeting.

Item 6: Second Reading and Public Hearing of an ORDINANCE PERTAINING TO TELECOMMUNICATIONS; DECLARING A MORATORIUM ON PROCESSING OR APPROVAL OF APPLICATIONS FOR CERTAIN TELECOMMUNICATIONS DEVICES AND FACILITIES; PROVIDING FOR CONFLICT AND SEVERANCE; AND PROVIDING AN EFFECTIVE DATE.

City Manager Pritt read the title. He explained the ordinance required two public hearings, both of which had been advertised in accordance with legal requirements. Councilman Hillebrandt pointed out the 180-day moratorium would take us to around the end of November. He concluded Council's intent is to have a Master Plan and ordinance in place by Thanksgiving, (Vice Mayor Reding confirmed that was his understanding) and that we should proceed accordingly to accomplish that goal, sooner if possible. Mayor Janes called for public comment. Resident Alice Kyllo stated adoption of the moratorium would be a big relief to most residents. Attorney Matt Uhle, representing Sprint, FL, Inc., repeated the request of Sprint and other communications companies for some kind of short-term relief. **Councilman Brown moved approval, Vice Mayor Reding seconded, and the ordinance was adopted by a vote of 3-2, with Councilmembers Janes and Theiss dissenting.**

Item 7: Consideration of A RESOLUTION PERTAINING TO TELECOMMUNICATIONS; RANKING PROPOSALS RECEIVED FROM FIRMS SEEKING TO PROVIDE TELECOMMUNICATIONS PLANNING CONSULTING SERVICES; AUTHORIZING THE MAYOR TO NEGOTIATE A CONTRACT WITH THE TOP-RANKED FIRM; AND PROVIDING AN EFFECTIVE DATE.

City Manager Pritt read the title, noting each Councilmember had been provided a copy of the proposal for review. During discussion of how to proceed, Vice Mayor Reding concluded that review of proposals is something Council should not be involved in and that only an expert staff could deal with the questions competently. He recommended letting staff rank the proposals, and just share more with Council about their reasoning. Vice Mayor Reding also emphasized the importance of the consultant's ability to assist in preparation of a Master Plan. There was further discussion as to how to proceed, with Councilman Brown supporting Council's ranking the consultants and other Councilmembers not feeling strongly one way or the other, as long as a decision could be made that day and the process could continue. Planning Director Bruce Rogers explained his rationale for selecting 2HELP Consulting as the top-ranked firm, and, in response to Councilman Brown, also commented on Consult First and Kreines. Council decision was to proceed by using the blackboard system of recording Councilmembers' ratings. Upon calculation of points assigned in accordance with Councilmembers rankings, 2HELP Consulting (10 points) was selected

CITY OF SANIBEL

ORDINANCE NO. 99 - 02

AN ORDINANCE PERTAINING TO TELECOMMUNICATIONS; DECLARING A MORATORIUM ON PROCESSING OR APPROVAL OF APPLICATIONS FOR CERTAIN TELECOMMUNICATIONS DEVICES AND FACILITIES; PROVIDING FOR CONFLICT AND SEVERANCE; AND PROVIDING AN EFFECTIVE DATE.

Whereas, on April 6, 1999 the Sanibel City Council after hearing, adopted Resolution No 99-71, entitled:

> "A RESOLUTION PERTAINING TO TELECOMMUNICATIONS; DIRECTING THE CITY MANAGER FORTHWITH TO PREPARE AND SUBMIT FOR CONSIDERATION AN ORDINANCE IMPLEMENTING A MORATORIUM ON PROCESSING OR APPROVAL OF APPLICATIONS FOR CERTAIN TELECOMMUNICATIONS DEVICES AND FACILITIES; DECLARING THAT A MORATORIUM ON SAME IS PENDING AND IS ZONING IN PROGRESS; DIRECTING THE CITY MANAGER TO PUBLISH AND POST A NOTICE OF PENDENCY; REQUESTING THE PLANNING COMMISSION TO EXPEDITE REVIEW AND RECOMMENDATION OF SUCH ORDINANCE; AND PROVIDING AN EFFECTIVE DATE";

and

WHEREAS, the City Manager has posted and advertised a Notice of Pendency of this ordinance; and

WHEREAS, it is necessary for the ordinance to be reviewed by the Sanibel Planning Commission, which acts as the local planning agency within the meaning of general law and the Sanibel Plan; and

WHEREAS the Sanibel Planning Commission has held a public hearing and has reviewed and made its recommendations;

NOW, THEREFORE, BE IT ORDAINED by the City Council of the City of Sanibel, Lee County, Florida:

Section 1. Definitions: Telecommunications facilities or devices: Facilities used for the provision of any of several wireless technologies, including wireless telephones, microwave services, traditional non-cable television, AM/FM radio, and paging and dispatch services. This includes all telecommunications devices used in conjunction with Federal Communications Commission licensed or unlicensed services.

Section 2. There is hereby declared a moratorium for a period of 180 days on the processing or approval of applications for telecommunications devices and facilities which entail construction of any new tower or facility exceeding 45 feet in height or which involve any increase in height of any existing tower or facility.

Section 3. Conflict.

All ordinances and parts of ordinances in conflict herewith shall be and the same are hereby repealed. If any part of this ordinance conflicts with any other part, it shall be severed and the remainder shall have full force and effect and be liberally construed.

Section 4. Severance.

If any section, subsection, sentence, clause, phrase or portion of this ordinance, or application hereof, is, for any reason, held invalid or unconstitutional by any court of competent jurisdiction, such portion or application shall be deemed a separate, distinct and independent provision and such holding shall not affect the validity of the remaining portion or application hereof.

Section 5. Effective Date.

This ordinance shall take effect immediately upon adoption.

DULY PASSED AND ENACTED by the Council of the City of Sanibel, Lee County, Florida, this 1st day of June, 1999.

AUTHENTICATION: _____ Mayor _____ City Clerk

APPROVED AS TO FORM: _____ City Attorney _____ Date

5/18/99	First Reading
5/7/99 and 5/25/99	Publication Date
6/1/99	Second Reading

Vote of Council Members:

Brown	Aye
Hillebrandt	Aye
Janes	Nay
Reding	Aye
Theiss	Nay

Date filed with City Clerk: 6/2/99

ORDCA793-MORATORIUM-TELECOM.ORD24

CITY OF SANIBEL

RESOLUTION NO. 99 - 104

A RESOLUTION PERTAINING TO TELECOMMUNICATIONS; RANKING PROPOSALS RECEIVED FROM FIRMS SEEKING TO PROVIDE TELECOMMUNICATIONS PLANNING CONSULTING SERVICES; AUTHORIZING THE MAYOR TO NEGOTIATE A CONTRACT WITH THE TOP-RANKED FIRM; AND PROVIDING AN EFFECTIVE DATE.

WHEREAS, the City Council has directed the advertisement of a request for proposals for firms interested in providing professional planning consulting services in the area of telecommunications; and

WHEREAS, the City has received timely proposals from seven firms which appear to have at least the minimum qualifications necessary for the services subject to the request for proposals; and

WHEREAS, at a public hearing this Council has considered the qualifications of the responding firms in relating to the needs of the City;

NOW, THEREFORE, BE IT RESOLVED by the City Council of the City of Sanibel, Lee County, Florida:

Section 1. The Sanibel City Council hereby ranks the top-two firms in the following order:

1. 2 Help Consulting

2. Consult First, Inc.

Section 2. The Mayor is hereby authorized to negotiate a contract with the top-ranked firm subject to Council approval. If he is unable to negotiate a satisfactory contract with said firm in

time for the next Council meeting, the Council will consider authorizing negotiations with the second-ranked firm.

Section 3. Effective date.

This resolution shall take effect immediately upon adoption.

DULY PASSED AND ENACTED by the Council of the City of Sanibel, Lee County, Florida, this 1st day of June, 1999.

AUTHENTICATION:

Mayor

City Clerk

APPROVED AS TO FORM: _____ City Attorney 6/1/99 Date

Vote of Council members:

Brown	Aye
Hillebrandt	Aye
Janes	Aye
Reding	Aye
Theiss	Aye

Date filed with City Clerk: 6/2/99

RES-TELECOM-PROPOSALS.ORDS25

Item 13: City Manager/City Attorney's Report
Item 13a: Consideration of A RESOLUTION APPROVING A CONTRACT WITH THE TOP-RANKED FIRM FOR TELECOMMUNICATIONS PLANNING CONSULTING SERVICES; AND PROVIDING AN EFFECTIVE DATE.

City Manager Pritt read the title, noting the top-ranked firm as David Stott, d.b.a. 2HELP Consulting. Planning Director Bruce Rogers said he had spoken with Mr. Stott on several occasions, had reviewed the contract and is satisfied. He advised that Mr. Stott would be present for two public workshops to be conducted on June 14. Director Rogers referred Council to the advertisement for the workshops. Councilman Hillebrandt questioned the use of the word "Towers" in the ad. Other Councilmembers agreed it was not necessary nor did it serve the community's purpose, and Director Rogers was directed to change the wording to indicate a "Public Workshop on Wireless Communications" instead, and to use pictures of things like cell phones instead of towers. Vice Mayor Reding recommended changing the top of the ad to include language as to "how we can reconcile needs with Sanibel's Vision Statement." Councilmember Brown expressed some concerns with the contract, but consensus was to go with staff's recommendation and approve the contract as written. **Councilman Hillebrandt moved approval, Vice Mayor Reding seconded, and the resolution was adopted by unanimous vote.**

Item 13b: Consideration of A RESOLUTION APPROVING AN AGREEMENT BETWEEN THE CITY OF SANIBEL AND COMMUNITY HOUSING & RESOURCES, INC. FOR PARTIAL FUNDING FOR THE 12-UNIT SENIOR HOUSING PROJECT KNOWN AS CASA MARIPOSA; AUTHORIZING THE CITY MANAGER TO EXECUTE SAID AGREEMENT; AND PROVIDING AN EFFECTIVE DATE.

City Manager Pritt read the title. Marty Harrity, CHR President, was present. There was brief discussion of the agreement. City Manager Pritt brought to Council's attention that CHR's agreement with the city is up for overall review and renegotiation this year, at which time all issues can be discussed. **Upon a motion by Councilman Brown, seconded by Vice Mayor Reding, the resolution was adopted by unanimous vote.**

Item 13c: Workplan for inventory of lighting on City property.

City Manager Pritt reviewed his memo, including the standards that would be used to determine whether lighting was consistent. He explained that Recreation Director Helene Phillips had already done a lighting survey for the Recreation Department and that Public Works Director Gates Castle will be conducting an inventory at other city facilities. There was consensus to agree with the proposal to prepare a preliminary report for Council, to be guided by questions as indicated in the City Manager's memo. Councilman Hillebrandt recommended documenting rationale in an effort to assist the public in better understanding the lighting ordinance.

As a separate item, City Manager Pritt reminded Councilmembers that there are still openings for the Newly Elected Officials seminar scheduled for July 9-11 at Ft. Myers Beach.

It was also announced that repaving of Periwinkle Way between Casa Ybel and Meridian begins tomorrow, June 16 and should be completed in two weeks. One lane of traffic will be maintained at all times.

CITY OF SANIBEL

RESOLUTION NO. 99 - 118

A RESOLUTION APPROVING A CONTRACT WITH THE TOP-RANKED FIRM FOR TELECOMMUNICATIONS PLANNING CONSULTING SERVICES; AND PROVIDING AN EFFECTIVE DATE.

WHEREAS, the City Council is considering alternative measures for regulation of telecommunication facilities or devices; and

WHEREAS, in order to obtain a different view of various methods of regulating such facilities or devices, or to provide for other types or location of telecommunications devices, the Council has deemed it advisable to seek proposals for planning services in connection with same; and

WHEREAS, the Council has sought, received and reviewed proposals for such planning services and has made a determination as to the top-ranked firm;

NOW, THEREFORE, BE IT RESOLVED by the City Council of the City of Sanibel, Lee County, Florida:

Section 1. The contract with 2 Help Consulting, for telecommunications planning consulting services, which will be numbered as City of Sanibel Contract No. 99-06-16, is hereby approved, and the City Manager is authorized to execute same on behalf of the City.

Section 2. Effective date.

This resolution shall take effect immediately upon adoption.

DULY PASSED AND ENACTED by the Council of the City of Sanibel, Lee County, Florida, this 15th day of June, 1999.

AUTHENTICATION:

Mayor

City Clerk

APPROVED AS TO FORM: _____ 6/4/99

City Attorney Date

Vote of Council members:

Brown	Aye
Hillebrandt	Aye
Janes	Aye
Reding	Aye
Theiss	Aye

Date filed with City Clerk: June 16, 1999

RES-CONTRACT-2HELP.ORD25

AGREEMENT FOR
PROFESSIONAL CONSULTING SERVICES

THIS AGREEMENT, made and entered into effective June __, 1999, by and between the City of Sanibel, Florida, 800 Dunlop Road, Sanibel, Florida 33957 (the City), and David Stott, d.b.a. 2 HELP Consulting (the consultant) a sole proprietorship, 6815 S. Hardy Drive, P. O. Box 24634, Tempe, Arizona 85283.

WITNESS:

WHEREAS, The City desires to retain the services of the Consultant in connection with preparation of a sustainable master plan for telecommunication facilities and devices; and

WHEREAS, Consultant is experienced and skilled in such matters; and

WHEREAS, The City has solicited and received proposals to render professional consulting and services in the field of telecommunications, has reviewed proposals received and has determined that Consultant is the top-ranked firm for the particular needs of the City for such services; and

WHEREAS, the parties desire to enter into an agreement setting forth their mutual understandings and covenants,

NOW, THEREFORE, in consideration of these premises, the City and the Consultant agree as follows:

1. The City, through its City Manager and City Attorney, engages the Consultant to provide the services set forth in this agreement. The Consultant agrees to render the consulting services set forth in this agreement, as requested and in a timely, professional and competent manner.

2. The services to be rendered under this agreement are those more fully set forth in the Scope of Services contained in Exhibits A and A-1 (attached and incorporated). Exhibit A is RFP Response to City of Sanibel, Bid Solicitation For Telecommunications by 2HELP Consulting, due May 19, 1999, and Exhibit A-1 dated June 15, 1999 is an amendment to Exhibit A which provides additional detail on the Scope of Work.

3. David Stott will be the person responsible for overall performance by Consultant and will personally prepare or review all final documents, unless otherwise approved by the City.

4. The contact person for the City is Bruce A. Rogers, Planning Director.

5. The Schedule of estimated fees for the services provided under this agreement, and the billing rates for services are set forth in Exhibit A, attached. The "upset limit" of this contract is $30,000, including all fees and expenses.

6. The Consultant will send a billing not more often than monthly, nor less often than quarterly, showing the correct amount of time for each person who renders billable services, the hourly rate and the amount of fees for the services. Regular clerical services are deemed to be overhead and not billable. The billing will also itemize the expenses. The City will endeavor to pay, upon correct billings, within the 21 days, but in no case shall the payment period exceed 45 days, as provided by Florida Law.

7. The City is a local governmental entity, funded by taxes. Accordingly, the Consultant agrees to endeavor to employ cost-saving measures.

8. For the duration of this agreement the Consultant will not accept or represent clients in matters adverse to the City without prior authorization.

9. This agreement is terminable by either party upon 14 days written notice by one to the other. As long as the Consultant is not in breach of this agreement, the City will pay the Consultant for all services rendered to the date of the receipt of the notice of termination. Upon termination, Consultant will deliver any outstanding work, whether completed or not. The Consultant will not terminate the agreement at such a time or in such a manner that the rights of the City in any proceeding will be prejudiced.

10. This agreement will terminate upon the City's adoption of an ordinance regulating telecommunications facilities and devices.

11. This agreement is governed by the laws of the State of Florida.

12. If a dispute arises over any aspect of this agreement, including without limitation, services or fees, and the dispute cannot be resolved within 60 days after it arises, the parties agree to attempt to resolve it through mediation. If it cannot be resolved through mediation within 60 days after submission, the parties agree to submit the dispute to arbitration, pursuant to the Florida Arbitration Code.

13. Consultant is solely liable for all Local, State, and Federal taxes, including employment and Social Security taxes, incident to the performance of aforementioned services.

14. Consultant agrees to provide proof of insurance to the City for all applicable liability coverage required by the City before beginning work.

IN WITNESS WHEREOF, the parties have signed this agreement as of the date and year written above.

CITY OF SANIBEL

By: _____
Robert D. Pritt, City Attorney/City Manager

DAVID STOTT, d.b.a. 2HELP Consulting,
a sole proprietorship

By: _____
David Stott

EXHIBIT A-1

An Amendment to Exhibit A under City of Sanibel Contract No. 99-06-16

1. Evaluate the characteristics of Sanibel...The Consultant will arrive in Sanibel June 23, 1999. The Consultant will facilitate a maximum of two (2) public workshops on June 24, 1999. The Consultant will depart Sanibel June 25, 1999 following a "de-briefing" with City Staff.

2. Collect and Analyze data...
   The City does not anticipate having to make any changes to the Sanibel Plan including Vision Statement. Rather, it is expected the telecommunications master plan will be consistent with the adopted Sanibel Plan.

3. Prepare and present alternatives...
   The consultant will furnish the City Staff with a draft of the report on alternatives for review and comment prior to the report being finalized. The report shall contain a discussion of the "pros" and "cons" of each alternative presented. The Consultant will present the report on alternatives to the City Council at a public meeting on August 3, 1999.

4. Perform mapping functions (when necessary). No amendments.

5. Prepare and present a sustainable telecommunications master plan.
   The consultant will submit the draft master plan to the City Staff for review and comment no later than September 10, 1999. City Staff will provide review comments to the consultant by September 17, 1999. The consultant will revise master plan, as necessary, and submit to the City Staff by October 6, 1999 so that it can be incorporated into the telecommunications ordinance which is tentatively scheduled for a first reading before the City Council on October 19 1999. The Consultant will be present at the City Council hearing for the first reading of the ordinance, and may be asked to return for subsequent City Council hearings.

ADDITIONAL CONSIDERATIONS

The Consultant will be expected to confer with Kurtis and Associates, P. C. on an as needed basis concerning radio frequency engineering matters and provisions of the Telecommunications Act of 1996 as it effects his work under this contract.

The consultant will be expected to comment on standards and regulations for the deployment of telecommunications facilities and devices as the ordinance to implement the master plan is being drafted by City staff.

Planning Director Rogers summarized what he believed to be Council's direction: balance the obligation the City has to let carriers provide service against the look of what they put up; Master Plan to set absolute height limit, the only relief being through a variance, any existing structure that exceeds that height would be placed on some kind of amortization schedule and eventually be lowered. Director Rogers then discussed letting carriers replace existing structures (i.e., replace fire station tower with a monopole a little higher) as matter of right, maybe to a limit of 80', which was acceptable to Council. He said he would speak further with Lee County Mosquito Control about the maximum height with regard to safety for pilots. He discussed further staff's ability to issue permits basically as a matter of right up to a certain height; Council agreed they would be amenable to a map that would specifically locate where structures would be permitted as a matter of right. Councilman Hillebrandt suggested the map could have different heights according to locations.

Mayor Janes and Councilman Hillebrandt questioned why staff's authority to permit a new structure should be limited to City-owned property. City Attorney Pritt advised Council not to limit to City-owned property. Mr. Stott added that cities have been challenged and lost because an ordinance says that towers can only be built on City-owned property. Mr. Stott clarified the Plan should stick to the premise of not saying where towers can be built, just that there are rules for building on specific pieces of property. Mr. Stott and Director Rogers then clarified an issue of other structures that could conceivably exceed the specified height (Lighthouse, power poles). Council thanked Mr. Stott and Director Rogers, and Councilman Hillebrandt added his thanks to Laura Bellflower, Nextel, for the information she had provided.

As an additional item, City Manager Pritt explained that an easement to Lee County Electric Cooperative having to do with the Casa Mariposo property had come in yesterday and the recommendation is to approve. He read into the record A RESOLUTION APPROVING AN EASEMENT TO LEE COUNTY ELECTRIC COOPERATIVE, INC.; AUTHORIZING THE MAYOR TO EXECUTE SAME; AND PROVIDING AN EFFECTIVE DATE. **Councilman Brown moved approval, Councilman Hillebrandt seconded and the resolution was approved by unanimous vote.**

Planning Commission Vice Chair Dick Downes expressed his appreciation and led a standing ovation for City Manager Bob Pritt for his efforts in keeping the City on course over the past few months.

Item 9: Councilmembers' Comments

Councilmembers Steve Brown and Nola Theiss presented a letter and petition from elementary school students requesting that immediate action be taken to cool the gym at the recreation center. It was agreed the petition would be taken under advisement.

Councilmember Theiss repeated concerns about the impact on the environment of the water ski show planned for the 25th anniversary celebration. Mayor Janes requested that he be kept up to date on celebration plans.

Item 10: Public Comments – Ray Grizzell commented on the Wastewater 's Final Report, which he said raises more questions than it answers. He distributed a paper on reasons for moving wastewater treatment plants off Sanibel.

There was no further business and the meeting was adjourned at 5:20 p.m.

Respectfully submitted,

Robert D. Pritt

Robert D. Pritt, City Manager

CITY OF SANIBEL

RESOLUTION NO. 99 - 147

A RESOLUTION APPROVING AN EASEMENT TO LEE COUNTY ELECTRIC COOPERATIVE, INC.; AUTHORIZING THE MAYOR TO EXECUTE SAME; AND PROVIDING AN EFFECTIVE DATE.

NOW, THEREFORE, BE IT RESOLVED by the City Council of the City of Sanibel, Lee County, Florida:

Section 1. The Easement to Lee County Electric Cooperative, Inc., a copy of which is attached hereto as Exhibit A and incorporated herein by this reference, is hereby approved, and the Mayor is authorized to execute same on behalf of the City.

Section 2. Effective Date.

This resolution shall take effect immediately upon adoption.

DULY PASSED AND ENACTED by the Council of the City of Sanibel, Lee County, Florida, this 3rd day of August, 1999.

AUTHENTICATION:

Mayor

City Clerk

APPROVED AS TO FORM: _____ City Attorney

8/3/99 Date

Vote of Council members:

Brown	Aye
Hillebrandt	Aye
Janes	Aye
Reding	Aye
Theiss	Aye

Date filed with City Clerk: August 4, 1999

RES-LCEC-EASEMENT.ORDS26

Prepared By:
Karen Hardin
Lee County Electric Cooperative, Inc.
Post Office Box 3455
N. Ft. Myers, FL 33918-3455

EASEMENT

KNOW ALL MEN BY THESE PRESENTS that The City of Sanibel, Florida, as Grantor, whose post office address is 800 Dunlop Road, Sanibel, Florida 33957, in consideration of the sum of one dollar and other valuable considerations, receipt of which is hereby acknowledged, does hereby grant to Lee County Electric Cooperative, Inc., a Florida corporation, whose post office address is Post Office Box 3455, North Fort Myers, Florida 33918, and to its successors and assigns (the term "assigns" meaning any person, firm, or corporation owning by way of assignment all rights under this Agreement or a portion of such rights, with the Grantee or its other assigns retaining and exercising the other rights), a perpetual easement for a right-of-way to be used for the construction, operation, and maintenance of one or more overhead and underground electric distribution lines, including, but not limited to, wires, poles, cables, conduits, anchors, guys, and roads, trails, and equipment associated therewith, attachments and appurtenant equipment for fiber optic telecommunications and television purposes (all of the foregoing hereinafter referred to as "facilities"), over, under, in, on, upon, and across the lands of the Grantor situated in the County of Lee and State of Florida and being more particularly described as follows:

SEE ATTACHED EXHIBIT A

together with the right and privilege from time to time to reconstruct, inspect, alter, improve, enlarge, add to, change the voltage, as well as the nature or physical characteristics of, replace, remove, or relocate such facilities or any part of them upon, across, over, or under the right-of-way described above with all rights and privileges necessary or convenient for the full enjoyment or the use thereof for the purposes described herein, including, but not limited to, the right to trim, spray, cut, and keep clear all trees and undergrowth and other obstructions within said right-of-way and on lands of Grantor adjoining said right-of-way that may interfere with the proper construction, operation, and maintenance of such facilities or any part of them, the right to mark the location of any underground facilities by above-ground markers and other suitable markers, and the right of ingress and egress for personnel and equipment of Grantee, its contractors, agents, successors or assigns, over the adjoining lands of the Grantor, for the purpose of exercising and enjoying the rights granted by this easement and any or all of the rights granted hereunder.

By the execution and delivery hereof, Grantor so expressly agrees that no portion of the right-of-way shall be excavated, altered, obstructed, improved, surfaced, or paved without the prior written permission of the Grantee, or its successors or assigns, and no building, well, irrigation system, drainage system, structure, obstruction, or improvement (including any improvements for

SIGNED, SEALED, AND DELIVERED
IN THE PRESENCE OF:

The City of Sanibel, Florida

_____
First Witness (Signature)

By: _____
(Signature)

_____
Printed, Typewritten, or Stamped Name of
First Witness

Robert P. Janes, Mayor
Printed, Typewritten, or Stamped Name

(OFFICIAL SEAL)

_____
Second Witness (Signature)

ATTEST:

_____
Printed, Typewritten, or Stamped Name of
Second Witness

_____
_____, City Clerk

STATE OF _____
COUNTY OF _____

The foregoing instrument was acknowledged before me this _____ day of _____ 19_____, by Robert P. Janes, Mayor of The City of Sanibel, Florida, who is personally known to me or who has produced _____ as identification.

(NOTARIAL SEAL)

_____
Signature of Notary Public

_____
Name of Notary Public Typewritten, Printed or Stamped

My commission expires: _____

EXHIBIT A

UTILITY EASEMENT

A tract or parcel of land lying in Section 26, Township 46 South, Range 22 East, Sanibel Island, Lee County, Florida, which tract or parcel is described as follows:

Beginning at a concrete monument marking the Northeast corner of a parcel described in Official Records Book 866, Page 1963 as it intersects the Southern right of way of Periwinkle Way (SR 867) thence run S. 00° 52' 46" E. a distance of 195.66' to the Point of Beginning.

From said Point of Beginning run N. 00° 52' 46" W. for 16.82 feet, thence run S. 71° 11' 38" W. for 188.78 feet, thence run N. 19° 10' 27" W. for 10.16 feet, thence run S. 70° 49' 33" W. for 6.00 feet thence run S. 19° 10' 27" E. for 10.31 feet, thence run S. 67° 46' 09" W. for 259.60 feet, thence run S. 73° 52' 57" W. for 326.44 feet, thence run S. 18° 06' 50" E. for 16.01 feet, thence run N. 73° 52' 57" E. for 323.74 feet, thence run S. 19° 10' 27" E. for 10.16 feet, thence run N. 70° 49' 33" E. for 6.00 feet, thence run N. 19° 10' 27" W. for 10.16 feet thence run N. 67° 46' 09" E. for 260.06 feet, thence run N. 71° 11' 38" E. for 186.04 feet to the Point of Beginning. Said parcel contains 0.29 acres more or less.

EXHIBIT A

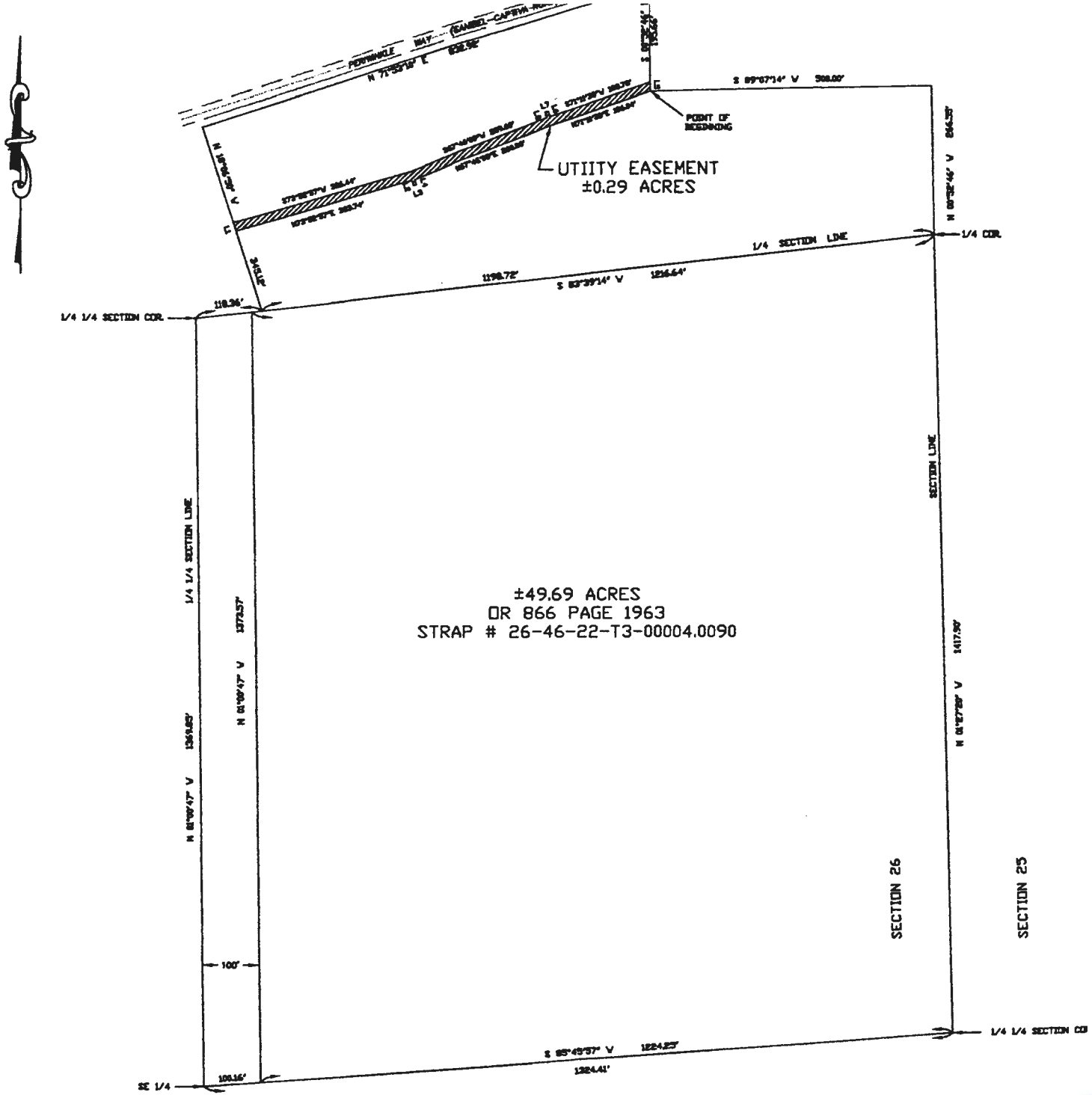

City of Sanibel
800 Dunlop Road
Sanibel, FL 33957

DATE: 6/24/99	
SCALE: 1"=100'	
DRAWN BY: CHN	CHECKED BY: CHS

CITY OF SANIBEL

ORDINANCE NO. 99 - 07

AN ORDINANCE RELATING TO TELECOMMUNICATIONS; AMENDING SUBSECTION I.B.2.c. OF THE LAND DEVELOPMENT CODE OF THE CITY OF SANIBEL TO DELETE THE DEFINITION OF "EARTH STATION"; AMENDING SUBSECTION I.C.1.c. BY ADDING AN OVERLAY DISTRICT MAP ESTABLISHING PERMITTED USE DISTRICTS FOR TELECOMMUNICATIONS DEVICES; AMENDING SECTION I.E.10., HEIGHT EXCEPTIONS, OF THE LAND DEVELOPMENT CODE; AMENDING SECTION I.E.32. TO REFLECT CHANGES MADE NECESSARY BY THE TELECOMMUNICATIONS ACT OF 1996; ADOPTING A WIRELESS TELECOMMUNICATIONS MASTER PLAN; PROVIDING REGULATIONS ON TELECOMMUNICATIONS DEVICES; AMENDING SECTION III.C.2. TO PROVIDE VARIANCE STANDARDS FOR TELECOMMUNICATIONS DEVICES; AMENDING SECTIONS VII.B.2., VII.B.3., VII.B.6. AND VII.D.3. TO ESTABLISH APPLICATION FEES FOR TELECOMMUNICATIONS DEVICES; PROVIDING FOR CODIFICATION; PROVIDING FOR CONFLICT AND SEVERANCE; AND PROVIDING AN EFFECTIVE DATE.

WHEREAS, the City has adopted a Land Development Code to implement the goals, objectives, and limitations of the Sanibel Plan; and

WHEREAS, a procedure has been established to revise and amend regulations in the Land Development Code in a manner consistent with the Sanibel Plan; and

WHEREAS, the United States Congress adopted the Telecommunications Act of 1996, which encourages the growth of the telecommunications industry through deregulation; and

WHEREAS, the Congress explicitly preserved the rights of local governments to determine and control zoning and planning decisions regarding the installation of personal wireless service facilities, over-the-air reception devices, and earth stations for reasons of safety and aesthetics; and

WHEREAS, the City Council anticipates that there will be requests regarding applications for the installation and operation of telecommunications antennas and related devices; and

WHEREAS, the City of Sanibel is a unique setting where nature and humans co-exist, where there is special attention given to the preservation of wildlife and the native ecological setting; and

WHEREAS, Sanibel is the home of the J.N. "Ding" Darling National Wildlife Refuge operated by the United States Department of the Interior, Fish and Wildlife Service, which offers an abundant variety of wildlife, including many different types of migratory birds; and

WHEREAS, Sanibel is a barrier island located in an area susceptible to wind damage and storm surge as a result of tropical storms and hurricanes; and

WHEREAS, the Sanibel Vision Statement states: "Sanibel is and shall remain a barrier island sanctuary, one in which a diverse population lives in harmony with the island's wildlife and natural habitats. The Sanibel community must be vigilant in the protection and enhancement of its sanctuary characteristics."; and

WHEREAS, the Sanibel Vision Statement states: "The City of Sanibel chooses to remain unique through a development pattern which reflects the predominance of natural conditions and characteristics over human intrusions. All forms of development and redevelopment will preserve the community's unique small town identity"; and

WHEREAS, the City Council deems it necessary to make such revisions, as contained in this ordinance; and

WHEREAS, all required public notices and public hearings for such revisions have been properly given and held; and

WHEREAS, such revisions have been referred to the Planning Commission for a recommendation as to the consistency of such revisions with the Sanibel Plan;

NOW, THEREFORE, be it ordained by the Council of the City of Sanibel, Lee County, Florida:

Section 1. Subsection I.B.2.c. of the Land Development Code of the City of Sanibel is hereby amended to delete the definition of "Earth station".

Section I.B.2. Definitions.

. . . .

c. Throughout this land development code, the following words and phrases shall have the meanings indicated unless the text of the article or section in which used clearly indicates otherwise: [Note: Although definitions are arranged alphabetically, reference should be made to the end of the subsection, for terms which may be subsequently added]:

. . . .

~~*Earth station.* An antenna or dish antenna, the purpose of which is to receive communication or other signals from orbiting satellites or other extraterrestrial sources, along with associated equipment to receive, magnify, interpret and transfer such signals, whether as an accessory use or a principal use.~~

Section 2. Section I.C.1. of the Sanibel Land Development Code is amended to read as follows:

Section I.C.1. Zoning Districts.

For the purposes of this land development code, the City is hereby divided into zone districts as follows:

....

c. Overlay Districts

....

(6) Telecommunications Devices Districts: On Telecommunications Districts Map

Symbol	*Name*
N/A	Telecommunications Tolerant Areas Map A

Section 3. Section I.E.10. of the Sanibel Land Development Code is amended to read as follows:

Section I.E.10. Height Exceptions.

The height limitations of this article shall not apply to detached water towers, bird nesting platforms, ~~microwave towers,~~ public utility structures, ~~franchised cablevision antennas,~~ anti-bird nesting devices of a type approved by the building official and installed a maximum of sixteen (16) inches above the top of a chimney or chimney vent cap, or lightning protection devices installed according to National Fire Protection Association Standard No. 78, Lightning Protection Code. Height restrictions for telecommunications devices are provided in Section I.E.32. of this code.

Section 4. Section I.E.32. of the Land Development Code of the City of Sanibel is hereby deleted and replaced with the following new Section I.E.32., which shall read as follows:

Section I.E.32 Telecommunications Devices.

a. Wireless Telecommunications Master Plan

(1) Background Discussion

The purpose of the Wireless Telecommunications Master Plan is to establish guidelines for the placement and operation of wireless telecommunications facilities both as primary and accessory uses. Particular attention will be given to those wireless services specifically protected by the Telecommunications Act of 1996 (the Act).

Wireless facilities will be considered a primary use when the services provided by those facilities are intended for use by the general public, or persons other than those in control of the site on which the facilities are located. Wireless facilities will be considered an accessory use when the services provided by the facilities are intended for use solely by the person(s) in control of the site on which the facilities are located.

(2) Primary Use Facilities

The placement of commercial wireless telecommunications facilities on the island will serve the needs of the city's year-round residents and businesses, and Sanibel's 3 million annual visitors, yet can allow the City to maintain its character as expressed in its vision statement. These are cooperative goals, which can be achieved with adequate planning, careful, and innovative siting, design, landscape and camouflage techniques arrived at through discussions between the commercial service providers and the City. For the purposes of this section, these commercial wireless telecommunications systems will be referred to as cellular-type systems since they have similar design characteristics to existing cellular telephone systems, and the Act suggests that they are "functional equivalents[1]."

All cellular-type systems utilize four main components -- fixed antenna structures, base transceiver stations, backhaul facilities, and a mobile telephone switching office. The antennas are set out in a grid with each cell slightly overlapping the next to allow calls to be moved seamlessly from cell to cell. Where cells do not overlap, coverage "holes" exist and a call will be dropped if the phone moves into one of the holes during a conversation. Figure 1 shows the simplified design of a typical cellular-type telephone system.

---

[1] Sec 704 (a)(7)(B)(i) of the Act cautions that State or local governments "i) shall not unreasonably discriminate among providers of functionally equivalent services; and (ii) shall not prohibit or have the effect of prohibiting the provision of personal wireless services." Sec 704 (a)(7)(C) states "(i) the term 'personal wireless services' means commercial mobile services, unlicensed wireless services, and common carrier wireless exchange access services; (ii) the term 'personal wireless service facilities' means facilities for the provision of personal wireless services..."

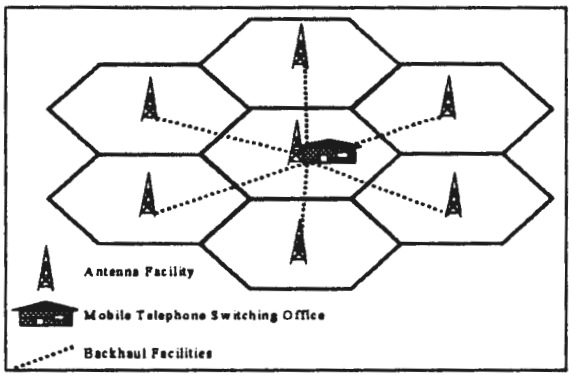

Figure 1 – A Simplified Cellular Radio System

All of the antenna facility sites (cell sites) have certain characteristics common to all other such facilities. Each site has a base transceiver station (BTS), antenna(s), a cable (or cables) connecting the BTS to the antenna(s), and an antenna support structure (see Figure 2). Each has a small building (shelter) or equipment enclosure (cabinet) which houses the BTS and may have batteries and/or an auxiliary generator to keep the site operational in the event of a power outage. In some instances, multiple service providers will share a facility (co-locate) and may share the antenna support structure and shelter; each provider will still have its own BTS, antenna(s), and cable(s).

The BTS converts the signals between the antenna and the cellular network. "Backhaul facilities" are the electronic equipment, cabling, and/or microwave devices necessary to connect the fixed antenna(s) to the mobile telephone switching office (the point at which mobile calls are connected). Wireless service providers typically utilize landline telephone facilities for backhaul, but may use point-to-point microwave when there are no existing landline facilities, or the cost of landline exceeds the cost of microwave. The mobile telephone switching office is where calls are routed among the cells and to and from the landline telephone network.

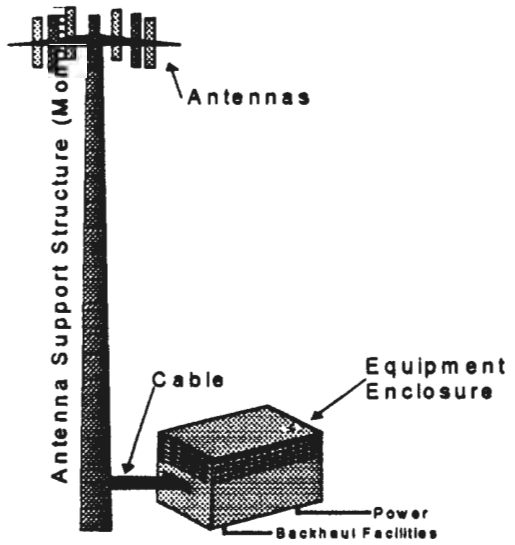

Figure 2 – Wireless Communications Facility Components (not to scale)

By far, the public's greatest concern is with the fixed antenna structures, as these tend to be the most visually prominent components of the systems. These support structures generally consist of poles, towers, or other vertical elements onto which the cellular antennas, microwave dishes, cabling, and/or other ancillary devices are mounted.

Unfortunately, while all cellular-type systems are similar in design, few are the same in their real-world layout. Differences in operating frequencies, system componentry, subscribership, user traffic patterns, and system use characteristics all drive the service providers' choice of cell sizes, antenna heights, and antenna locations. This allows for some co-location opportunities among service providers, but does not allow all providers to build identically laid-out systems. Thus there will be a need for multiple antenna sites on the island.

When co-locating, service providers operating on similar frequencies need some physical separation between their antennas to avoid interference. This can be accomplished by mounting their antennas on different support structures at the same height (i.e., two antennas mounted at 90' above ground level on separate monopoles) or mounting their antennas on a shared structure at different heights (i.e., a 110' monopole with antennas mounted at 85' and at 110'). Providers operating on dissimilar frequencies may be able to locate their antennas in closer proximity to each other.

One of the primary concerns of the residents of Sanibel is maintaining the ambience and character of the island as a place where humans live in harmony with the island's wildlife and natural habitat. Extraordinarily tall towers, monopoles, or other similar man-made structures are viewed as intruders which should be prohibited, or if already in place, removed. In the area of wireless telecommunications, there seems to

be no other issue which can galvanize people as quickly as a discussion of "towers." Unfortunately, the laws of physics favor high antennas for broad coverage, enabling service providers to meet the desires of the widest possible number of customers at the lowest possible cost. Conversely, lowering antenna heights requires more facilities to serve the same area, raising installation and maintenance costs. Figure 3 suggests how the height of the antenna on a structure affects the distance the radio signal can travel, assuming all other factors are held constant.

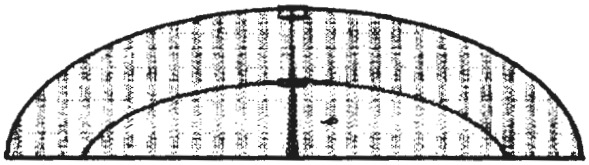

Figure 3 – Area of coverage based on antenna height (all else held constant, not to scale)

Some antennas, such as microwave dishes, require a direct line-of-sight connection with their distant counterpart to facilitate the wireless connection; these antennas must be mounted in such a fashion that the line-of-sight remains open at all times. Shooting the signal through trees or other potential obstructions is not feasible, which is why the antennas are mounted above tree- and rooftops.

Sanibel Island is a migration stopover or home to at least 280 species of birds. Towers extending above the tree line pose a hazard to birds, particularly birds that fly at night. Of great concern are guyed towers because of the difficulty birds have in seeing the guy wires; even when birds can avoid the tower elements, they cannot always avoid the guy lines. Birds that hit the guy lines can be seriously injured or killed by the initial impact or by subsequent impact with the ground.

(3) Existing Antenna Support Structures

In August, 1999, there were four antenna support structures over 100 feet tall in the city:

Owner	Height	Type
Wireless One	220'	Lattice
Sprint Telephone	165'	Guyed
City of Sanibel (City Hall)	146.5'	Lattice
School District of Lee County	106'	Guyed

The Wireless One, Sprint Telephone, and City towers were multi-user structures. The School District tower was a single-user structure. Other smaller, single-user towers also existed:

Owner	Height	Type
J. N. "Ding" Darling National Wildlife Refuge	95'	Guyed
Island Water Association	79'	Lattice
Sanibel Fire Control District	79'	Lattice
Amoco Gas Station	76'	Guyed
Sanibel Fire Control District	67'	Guyed
Island Garage	62'	Guyed
Mobil Gas Station	49'	Guyed
City of Sanibel (Public Works Department)	44'	Guyed

(4) Regulations

As noted earlier, the Act bars State and local governments from prohibiting the placement of wireless facilities, if that prohibition would prevent, or have the effect of preventing, the provider from offering service. Section 704 of the Act further forbids the prohibition of facilities based on the environmental effects of radio frequency (RF) emissions. The Act invested solely in the FCC the power to regulate RF emission standards; in January, 1997, the FCC adopted RF emission safety guidelines developed by the Institute of Electrical and Electronics Engineers and adopted by the American National Standards Institute. All cellular-type antennas are required to meet these standards[2].

The FCC has adopted rules to assure that communications sites comply with Federal environmental laws, including the National Environmental Policy Act of 1969 (NEPA). If, after consulting the NEPA rules, a service provider determines that its proposed site qualifies for an FCC review, it is required to notify the FCC's Wireless Telecommunications Bureau's Enforcement Division and attach an Environmental Assessment (EA) to its filing. The Bureau's review of the filing consists of these stages:

1. **Initial Review** -- to determine if the proposed facility has any non-environmental concerns;
2. **Acceptance Public Notice** -- the licensing office places the filing on the FCC's Public Notice for thirty days;

[2] Sec 704(b)(iv) states "No State or local government or instrumentality thereof may regulate the placement, construction, and modification of personal wireless service facilities on the basis of the environmental effects of radio frequency emissions to the extent that such facilities comply with the Commission's regulations concerning such emissions."

3. **Review** -- the EA is then reviewed by the Bureau's Enforcement Division, along with any comments, petitions, or opposition filed against the EA during the 30-day Public Notice period;
4. **Finding of Impact** -- after consulting with all relevant expert federal and state agencies, the Enforcement Division determines whether or not the proposed project will have a significant impact on the environment. If no significant impact is determined, the Enforcement Division issues a finding of no significant impact (FONSI). If a significant impact is expected, the service provider is given the opportunity to amend its proposal to reduce, minimize, or eliminate environmental problems.

An antenna support structure two hundred feet (200') or taller may require a Federal Aviation Administration (FAA) review to determine whether or not it will require safety lighting. In addition, the Lee County Mosquito Control District has requested that all structures 150 feet or taller be lighted for safety purposes.

The Land Development Code in effect in August, 1999, generally limits the height of all structures to 45 feet above sea level, however, exceptions include water towers, microwave relays, cable transmission and radio towers, and public utility structures[3].

(5) Plan for Wireless Telecommunications Facilities

Wireless communication services continue to expand; new companies enter the market and existing services are augmented or replaced by new ones. The cellular-type service providers are not only interested in serving Sanibel residents, but have a stake in serving their existing customers who visit the island for work or recreation. Consequently, although the island population may not be large enough to support multiple service providers, the providers wish to serve the island.

Antenna support structures in use on Sanibel Island today consist of lattice towers and guyed towers. In the future, when antennas are mounted on self-supporting towers, it is intended that these new towers be of the monopole type (see Figure 4). A monopole is a unitary structure made of wood, metal, or concrete, and mounted to a base secured firmly in the ground so that it does not require legs or guy wires for support. Cables connecting the antennas to the BTS are typically run down the inside of the monopole.

[3] Land Development Code, Part I, Sec. I.I.3(a)(3) and Sec. I.E.10.

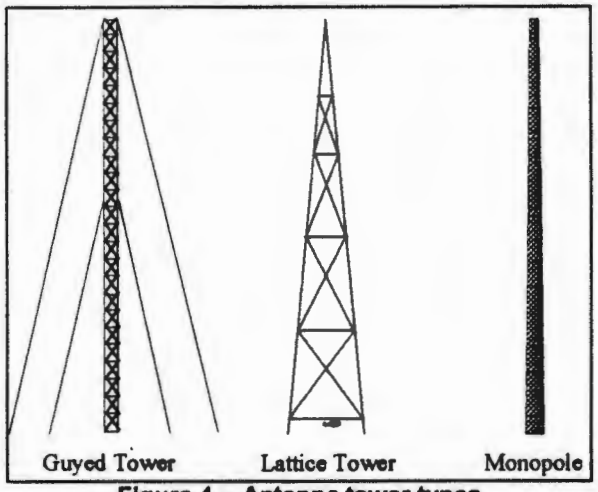

Figure 4 – Antenna tower types

Monopoles have a narrower profile than lattice towers and do not require guy wires, which can be hazardous to birds. Monopoles also lend themselves to use as support structures for other facilities, such as athletic field lights or utility wires.

Even with an antenna support structure of great height, no service provider can offer quality service to the entire island with just one cell site. Service providers on the air in August, 1999, had only one site each, and none were able to reach all areas of the island. One of the main factors affecting RF signal propagation is the island's dense vegetation. Signals from both the cell site antenna and the hand-held telephones are absorbed by vegetation, reducing the efficiency of the system overall.

As a result, service providers wishing to provide quality coverage to the entire island may need multiple sites. The need for multiple sites has the side effect of reducing the height of the antennas necessary to serve the island. As the number of antenna sites operated by a single service provider increases within a given geographic area, the antenna mounting height decreases as a means of reducing the individual cell size. Thus, as shown in Figure 5, subdividing the original cell results in smaller cells, which will typically have lower antennas.

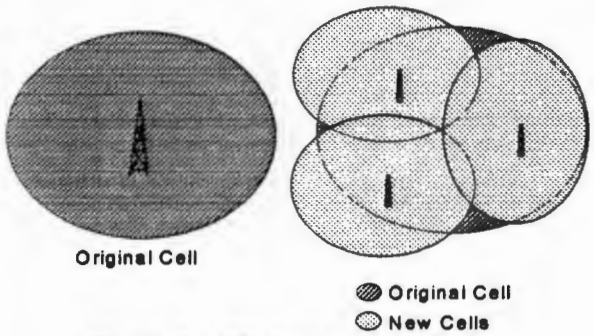

Figure 5 – Effect of cell subdivision on antenna mounting heights

It is the desire of the city to minimize the number of man-made vertical elements extending above forty-five feet (45') above sea level. Where it is necessary to exceed that height for the placement of wireless telecommunications facilities, those facilities should be as visually unobtrusive as possible. When it is necessary to build a new antenna support structure, it is preferred that an existing structure be replaced by one capable of supporting the antenna(s) in addition to providing the utility of the original structure.

To assist the providers in establishing their service, certain areas of the city have been designated as "telecommunications tolerant" areas. These areas are usually buffered from residential views by vegetation and/or distance. They may already have an existing antenna support structure located on the premises, which will either support additional antennas or can be rebuilt or replaced to support additional antennas.

The areas considered "telecommunications tolerant" are:

1. City Public Works Maintenance Yard (750 Dunlop Road)
2. Donax Street Wastewater Treatment Plant (930 Donax Street)
3. Wulfert Road Wastewater Treatment Plant (2222 Wulfert Road)
4. The site of the existing WirelessOne tower (701 Opre Ave)
5. Sprint Florida telephone switching office (3445 Sanibel-Captiva Road)
6. The Sanibel School (3840 Sanibel-Captiva Road)
7. Recreation field next to the Sanibel School
8. J. N. "Ding" Darling National Wildlife Refuge maintenance yard (3900 Sanibel-Captiva Road)
9. Lee County Electric Cooperative electrical substation (5050 Sanibel-Captiva Road)
10. Lee County Electrical Cooperative Pine Island to Sanibel Power Transmission Line support poles
11. Island Water Association (IWA) Reverse Osmosis Plant (3651 Sanibel-Captiva Road)
12. Sanibel Fire Control District station (5171 Sanibel-Captiva Road)
13. IWA water tank (5566 Sanibel-Captiva Road)

It is the City's policy to encourage any new, tall (up to 149' above ground level) antenna support structures to locate on the City-owned parcels identified as areas 1 - 4 above. In order to encourage providers to look first to these City-owned areas, the City will establish an expedited permitting process and make the areas available at rates consistent with prevailing market conditions. If, for technological reasons, the "telecommunications tolerant" areas of the city are unacceptable to a service provider, then an alternate permitting process should be followed.

In any of the areas listed above, no public hearing will be necessary to obtain a permit to attach an antenna onto an existing structure if no reconstruction or strengthening of the existing structure is required. When an existing support structure is rebuilt or replaced it must meet the existing guidelines for construction. Replacement structures constructed for the primary purpose of supporting wireless communications antennas must be of the monopole type.

In areas 1 - 5 above, new antenna support structures up to a maximum height of one hundred forty-nine feet (149') may be permitted, following the permitting procedures outlined in the Land Development Code.

In areas 6 - 11 above, antenna support structures no taller than one hundred twenty feet (120') above ground level are allowed.

In areas 12 and 13 above, antenna support structures no taller than eighty-five feet (85') above ground level are allowed.

For all the "telecommunications tolerant" areas listed above, these recommendations should remain in place so long as the land is zoned and used for the purposes for which it was zoned and used in August, 1999. Should the zoning or usage change, the designation of "telecommunications tolerant area" should be reviewed to ensure that this is still a correct designation.

In all areas of the city not listed above, placement of an antenna at or below a height of forty-five feet (45') above sea level may be permitted. Support structures greater than forty-five feet (45') above sea level may be permitted after obtaining a permit following the guidelines contained in the Land Development Code.

In all cases, new support structures constructed for the primary purpose of supporting antennas must be of the monopole type.

Before a permit for a wireless telecommunications facility is issued, each proposed facility will be reviewed to ensure that it meets the following criteria:

Need

In order to obtain a permit for a new antenna support structure, an applicant must show:

- that no existing support structure will meet the technical requirements of the service provider;
- that if an existing support structure does meet the technical requirements of the service provider, it is not available at commercially reasonable terms;

- that the proposed height of the structure is the lowest maximum height that will meet the technical requirements of the service provider;
- that the new structure will be of the monopole type and will be suitable for co-location by another service provider, or may be modified to allow co-location;
- that the new structure will be made available to other service providers at terms that would be considered "commercially reasonable" considering all of the factors a reasonable tower leasing company would deem relevant in entering into such an agreement.

Location

In order to obtain a permit for a new antenna support structure, an applicant must show:

- that the proposed structure will be located in one of the "telecommunications tolerant" areas of the city, or
- that technological reasons dictate the placement of the structure outside one of the "telecommunications tolerant" areas of the city, or
- that no technically acceptable "telecommunications tolerant" site is available at commercially reasonable rates.

Appearance

The appearance of all new antenna support structures must be as unobtrusive as possible. Strongest support will be given to structures which do not appear on their face to be antenna support structures. In all cases, newly constructed or re-constructed structures must be designed, built, and colored or painted so as to reduce visual obtrusiveness. The use of materials, colors, textures, screening, and landscaping should be employed to blend the structures into the natural and surrounding setting. All antennas and related communications equipment mounted on the support structure should be mounted as close to the structure as possible.

No signage may be attached to the support structure. Unless required by law, the structure may not be lighted. All equipment buildings, shelters, and cabinets must meet all applicable building safety codes and must be designed, constructed, and colored or painted to be architecturally compatible with adjacent buildings.

Wireless communication facilities that cannot be readily observed from adjacent streets and/or the beaches are preferred.

In all cases, new and reconstructed wireless telecommunications facilities and antenna support structures must meet all conditions as outlined in all applicable sections of the Land Development Code.

In issuing permits for the siting of wireless telecommunications facilities, the City of Sanibel may impose additional restrictions, which may be necessary to carry out the purposes of this plan.

(6) Accessory Use Facilities

Wireless telecommunications facilities used to provide service(s) to the owner or inhabitant of the structure to which they are attached are considered an accessory use and may be commercial or non-commercial in their nature. Examples of commercial use would be the operator of an automotive garage using a two-way radio to communicate with a tow truck driver, or a utility company using radio telemetry to read meters at its customers' locations. Non-commercial services would include satellite and over-the-air television reception, fixed wireless telephone service, and citizen band and licensed amateur ("HAM") radio usage.

Wireless telecommunications facilities that meet the following criteria shall be exempt from permitting by the City:

a. antennas which are mounted on or attached to an occupied structure and do not extend more than eighteen inches (18") in any direction from the mounting or attachment point of the antenna, and

b. are used exclusively by the occupant of the structure, and

c. are blended into the design of the structure to which they are attached by the use of materials, paint, colors, and/or textures.

The FCC has established rules providing a great deal of latitude in the placement of the following video reception antennas[4]:

a. direct-to-home satellite dishes that are less than one meter (39.37") in diameter,

b. TV antennas,

c. wireless cable antennas

These antennas may be placed on property that is owned by, or within the exclusive use or control of the person using the antenna to view video programming. Local

[4] The rule is cited as 47 C.F.R. Section 1.4000 and has been in effect since October 14, 1996.

regulations[5] that prevent viewers from receiving acceptable quality signals, cause the user to incur unreasonable installation expense, or cause unreasonable delays are prohibited. Regulations may be imposed on the placement of antennas (they may require that the antenna be placed out of view from the street, for instance) if the regulation does not prevent reception of an acceptable quality signal or impose an unreasonable expense or delay associated with installation.

Safety and historic preservation restrictions may be permitted even if they impair the installation, maintenance, and/or use of the antenna. To qualify, safety regulations must be clearly defined, and cover legitimate safety public concerns. Sites that are included in, or eligible for inclusion on, the National Register of Historic Places may also be restricted.

If an antenna mounting mast will place the antenna at a height exceeding twelve feet (12') above the roofline of a structure, the permitting procedures contained in the Land Development Code must be followed.

The placement of accessory use facilities should conform to all applicable sections of the Land Development Code, except that antenna support structures used to support a two-way antenna may exceed the height of the primary structure within these guidelines:

a. a permit has been obtained from the City;

b. for uses other than licensed amateur radio, the total height of the support structure, radiating element(s), and all appurtenances, when fully extended, is at or below the maximum height permitted for that location;

c. for licensed amateur radio users, the total height of the support structure, radiating elements, and all appurtenances, when fully extended, is below the height set forth in federal law.

For structures not conforming to these guidelines, the permitting procedures contained in the Land Development Code must be followed. In determining whether a permit will be issued, the following design criteria will be considered:

a. to the extent possible, guyed structures should be avoided;

b. to the extent possible, the antenna(s) and supporting structure(s) should be designed, constructed, and colored or painted so as to reduce visual obtrusiveness. The use of materials, colors, textures, screening, and

[5] "Local regulations" refers to any state or municipal law or regulation, "including zoning, land-use or building regulations, private covenants, homeowners' association rules, condominium or cooperative association restrictions, lease restrictions, or similar restrictions" per the FCC's Fact Sheet on Over-the-Air Reception Devices Rule, dated June, 1999.

landscaping should be employed to blend the structures into the natural and surrounding settings;

c. unless required by law, the structure may not be lighted.

In all cases, no signage may be attached to accessory use antenna structures and all such structures must meet all applicable safety codes.

b. *Purpose and Intent.*

This section is intended to bring the City of Sanibel's Land Development Code into compliance with the Telecommunications Act of 1996, which was codified as Public Law 104-104, and any other lawful regulation passed pursuant to and in compliance with the Act. It is intended to provide Sanibel residents, businesses, visitors and public service agencies with access to the latest telecommunications services and technology within the context of and in a manner consistent with the Sanibel Plan.

The City has an unpreempted duty and right to protect the safety and welfare of its citizens, and all the regulations contained in this section are to advance those objectives. In addition, the regulations are designed to promote the unique aesthetic quality that can be found in Sanibel. Unless specifically preempted, aesthetics will be considered in any decision involving telecommunications devices.

Specifically, the standards and requirements of this section are intended to protect the public safety and welfare by requiring adherence to development and construction standards which:

(1) minimize the threat to public safety;

(2) protect public park, conservation and environmentally sensitive lands from both the physical and visual intrusion of telecommunications devices;

(3) minimize the adverse visual effects of telecommunications devices from residential areas, from scenic roadways, from public view, and from the waters and beaches surrounding Sanibel Island;

(4) protect the island's wildlife, including birds, from the threats posed by antennas and support structures; and

(5) ensure compliance with the City's dark sky policy consistent with the provision of telecommunications services.

c. *Definitions.*

(1) AGL: Above Ground Level

(2) AMSL: Above Mean Sea Level

(3) Amateur Radio Services: includes the Amateur Service, the Amateur-Satellite Service, and the Radio Amateur Civil Emergency Service.

(4) Amateur-Satellite Service: A radiocommunications service using stations on Earth satellites for the same purpose of those of the amateur service

(5) Amateur Service: A radiocommunications service for the purpose of self-training, intercommunication and technical investigations carried out by amateurs, that is, duly authorized persons interested in radio technique solely with a personal aim and without pecuniary interest.

(6) Antenna: Any system of wires, poles, rods, reflecting disks, parabolic dish, grid, whip, panel or similar device used for the transmission or reception of electromagnetic waves

(7) Antenna Mount (Mount): Any supporting structure used to hold an antenna at a desired height.

(8) Base Transceiver Station: Fixed device equipped to engage in radio communication or radio frequency transmission of energy

(9) Co-location: The use of a single structure or mount to support the antennas of more than one provider.

(10) Commercial Mobile Radio Services: A mobile service, or its functional equivalent, that (1) is provided for profit, i.e., with the intent of receiving compensation or monetary gain; (2) is interconnected with the public switched telephone network; and (3) is available to the public, or to such classes of eligible users as to be effectively available to a substantial portion of the public

(11) Direct-to-Home Satellite Services: Distribution or broadcasting of programming or services by satellite directly to the subscriber's premises without the use of ground receiving or distribution equipment, except at the subscriber's premises or in the uplink process to the satellite.

(12) Earth Station: A station located either on the earth's surface or within the major portion of the earth's atmosphere and intended for communication with one or more space stations; or one or more stations of the same kind by means of one or more reflecting satellites or other objects in space. See also, Satellite Earth Station Antenna, infra].

(13) Equipment Shelter: Any support building or cabinet which houses the electronics, backup power and other equipment associated with the operation of an antenna.

(14) Fall Zone: The area on the ground within a prescribed radius from the base of a telecommunications device. The fall zone is the area within which there is a potential hazard from falling debris or collapsing material.

(15) FCC: Federal Communications Commission

(16) Ground-Mounted Facility: A free-standing antenna mount constructed upon the ground. Utility pole-mounted facilities shall not be considered ground-mounted facilities. The facility shall include any associated equipment shelters regardless of where they are located with respect to the mount.

(17) Guyed Tower: An openwork structure of crossed strips or bars of metal erected and steadied with steel guy wires anchored in the ground or to other fixed structures, used to support antennas, surmounting appurtenances or other devices.

(18) Lawful Structure: A building or other structure, including a utility pole, that is lawfully existing, or for which a valid City permit exists on the effective date of the application for construction or placement of the telecommunications device.

(19) Location: The geographic location of a telecommunications facility within the City of Sanibel.

(20) Microwave System: Point-to-point digital or analog facilities equipped with transmitters, receivers, antennas and other relevant apparatus that transceive electromagnetic waves in the frequency ranges above 890 MHz all the way up to the lower limit of the infrared band. Microwave radio systems provide a portion of the long-haul message circuits (including long-distance telephone, wide band data, television transmission) and short-haul message circuits (including intrastate and feeder services) via multiple repeater sites across the country and throughout the world. Also referred to as point-to-point radio systems.

(21) Monopole. A generally round, tapering stand-alone single shaft of wood, steel or concrete, or similar material used to support antennas, surmounting appurtenances or other devices.

(22) Mount. See Antenna Mount.

(23) NGVD. National Geodetic Vertical Datum of 1929.

(24) Other Small Communications Devices: Any communications device, antenna, transmitter, receiver, repeater, etc. not covered by any other definition listed herein that is mounted external to a residence or building or other structure and is no more than one (1) meter in diameter or diagonal.

(25) Other Large Communications Devices: Any communications device, antenna, transmitter, receiver, repeater, etc. not covered by any other definition that is mounted external to a residence, building or other structure and is greater than one (1) meter in diameter or diagonal.

(26) Over-the-Air Reception Devices: An antenna that is designed to receive direct broadcast satellite service, including direct-to-home satellite services, or an antenna that is designed to receive video programming services via multipoint distribution services, including multichannel multipoint distribution services, instructional television fixed services, and local multipoint distribution services, or an antenna that is designed to receive television broadcast signals.

(27) Personal Wireless Services (PWS): Commercial mobile services, unlicensed wireless services, and common carrier wireless exchange access services.

(28) Personal Wireless Services (PWS) Facilities: Facilities for the provision of personal wireless services.

(29) Personal Wireless Services (PWS) Provider: A company authorized by the FCC to operate a personal wireless services system. A PWS carrier.

(30) Private Mobile Radio Service: Any mobile radio service that is not commercial mobile radio service or its functional equivalent.

(31) Public View: Viewed: (a) at ground level from a public street; (b) from a place where the public is admitted for general use; or (c) from an adjacent residential use.

(32) Radio Amateur Civil Emergency Service: A radio service using amateur stations for civil defense communications during periods of local, regional or national civil emergencies.

(33) Receiver: An apparatus or device that converts incoming electromagnetic waves or electrical signals into audible, visual, analogue, digital or otherwise intelligible information.

(34) Repeater: A fixed system of receiver(s) and transmitter(s) that retransmit the signals of other stations.

(35) Satellite Earth Station, Antenna: Shall have the same meaning as the language contained in 47 CFR Sec. 25.104.

(36) Search Ring: A geographical area in which a service provider's telecommunications device is intended to be located to serve the service provider's intended coverage area.

(37) Sectored Antenna Array: System of multiple sets of antennas utilized by a single carrier at a given antenna site to increase capacity for subscriber demand or to otherwise directionalize radio coverage within the coverage area of any given antenna site.

(38) Self-Supporting Tower: An openwork structure of crossed strips or bars of metal standing alone without the use of guy wires, used to support antennas, surmounting appurtenances or other devices.

(39) Siting: The positioning of a telecommunications facility on a particular lot or parcel of land.

(40) Structure-Mounted Facility: An antenna mount attached to or upon any non-temporary structure at a location where said use is permitted. This shall include buildings, water tanks, private light poles, or other structures not originally designed as antenna mounts. The facility shall include any associated equipment shelters regardless of where they are located with respect to the mount.

(41) Support Structure: Any monopole, tower, building, shaft, chimney or other structure to which a mount, an antenna, surmounting appurtenance or other device is attached for purposes of elevating that device above ground level.

(42) Surmounting Appurtenance: Any antenna, obstruction lighting system, support pipe, lightning rod or other device that protrudes above a support structure, or mount.

(43) Telecommunications Device (Facility): Facilities used for the provision of any of several wireless technologies, including wireless telephones, microwave services, traditional non-cable television, AM/FM radio, paging and dispatch services, earth stations, over-the-air reception devices and personal wireless service facilities, including equipment shelters.

(44) Telecommunications Device as an Accessory Use: A telecommunications device that is solely an accessory use to a principal use of a property: that is designed and operated solely to provide service to the site on which it is located, and located on property within the exclusive use or control of the device user, where the user has a direct or indirect ownership or leasehold interest in the property.

(45) Telecommunications Device as a Principal Use: A telecommunications device, including personal wireless service facilities, designated and used to provide service to the public rather than to provide service solely to the site on which it is located; not an accessory use.

(46) Temporary Telecommunications Device: A device that is designed and constructed to serve, on a temporary basis, as a means of providing service on an emergency basis or for a special event.

(47) Transmitter: An apparatus that generates radio waves, modulates their amplitude or frequency, and transmits them by means of an antenna.

(48) Unlicensed Wireless Services: The offering of telecommunications services using duly authorized devices which do not require individual licenses from the Federal Communications Commission, but exclusive of direct-to-home satellite services.

(49) Utility Pole-Mounted Facility: An antenna mount attached to or upon an electric transmission or distribution pole, street light, athletic field light pole or similar facility located where said use is permitted. The facility shall include any associated equipment shelters regardless of where they are located with respect to the mount.

(50) Visually Obtrusive Structures: Physical structures which due to their height, shape, siting, location, design, reflectivity, color, or lighting, are noticeably undesirable and tend to detract from the character, scale or attractiveness of surrounding land uses.

d. ***Applicability.***

All telecommunications devices, including existing devices, and their antennas, mounts, support structures, surmounting appurtenances and equipment shelters, located anywhere in the City of Sanibel shall be subject to the standards and requirements of this section and all other applicable sections of this code, unless expressly exempt. Telecommunications devices are not considered public utility uses within the meaning of this code.

Telecommunications devices as accessory uses, including their antennas, mounts, support structures, surmounting appurtenances and equipment shelters, located on lands owned by and controlled by the Federal Government or the School District of Lee County, shall be exempt from both the permitting requirements, and the standards of this section.

In the event of any conflict between other regulations contained in this code, the provisions of this section shall supersede, with respect to the regulation of telecommunications devices.

(1) Existing Telecommunications Devices, including mounts, support structures, surmounting appurtenances and equipment shelters.

(a) All existing telecommunications devices, which were lawfully installed or constructed prior to the effective date of this section, but which do not conform to the standards and requirements of this section, shall be treated as non-conforming structures.

(b) Any telecommunications device that has received a development permit, but has not yet completed construction or installation, shall be considered an existing telecommunications device so long as the development permit is valid on the effective date of this section.

(c) Routine maintenance shall be permitted on the devices.

(d) Any new construction, or alteration, modification, change in appearance, or addition to existing telecommunications devices shall comply with the standards and requirements of this section as for new telecommunications devices. An existing support structure located in a "telecommunications tolerant" area may be structurally modified and have antennas repositioned or added to it provided: (a) the new antennas meet the requirements for new construction; (b) the structural modifications are as unobtrusive as possible; and (c) there is no increase in height of the existing structures.

(2) New Telecommunications Devices

All new telecommunications devices shall comply with the standards and requirements of this section.

e. ***Permitted Uses.***

(1) *Telecommunications Devices as Accessory Uses.*

Telecommunications Devices as Accessory Uses are permitted throughout the City, except, ground-mounted and utility pole-mounted facilities and devices are not permitted in the Gulf Beach Zone, the Bay Beach Zone, or in the Environmentally Sensitive Lands Conservation District. No more than 3 accessory telecommunications devices are permitted for any dwelling unit or commercial unit, or other individual land use.

(2) *Telecommunications Devices as Principal Uses.*

Policy: It is the City's policy to encourage use of designated City-owned land and facilities for the siting and location of telecommunications facilities as principal uses, especially when the height exceeds +45'-0", NGVD. To effectuate this policy, the City will assure a reasonable pro-rata charge is made for shared use of City-owned facilities, or rental rates consistent with prevailing market conditions are charged, consistent with an appropriate sharing of construction, financing, and maintenance costs. Fees may also be charged for any structural or radio frequency changes necessitated by shared use.

(a) **Telecommunications tolerant areas** are generally depicted on Map A, and specifically identified below:

i. City Public Works Maintenance Yard (750 Dunlop Road)

ii. Donax Street Wastewater Treatment Plant (930 Donax Street)

iii. Wulfert Road Wastewater Treatment Plant (2222 Wulfert Road)

iv. The site of the existing WirelessOne tower (701 Opre Avenue)

v. Sprint Florida telephone switching office (3445 Sanibel-Captiva Road)

vi. The Sanibel School (3840 Sanibel-Captiva Road)

vii. Recreation field next to the Sanibel School

viii. J. N. "Ding" Darling National Wildlife Refuge maintenance yard (3900 Sanibel-Captiva Road)

ix. Lee County Electric Cooperative electrical substation (5050 Sanibel-Captiva Road)

x. Lee County Electric Cooperative Pine Island to Sanibel Power Transmission Line support poles

xi. Island Water Association (IWA) Reverse Osmosis Plant (3651 Sanibel-Captiva Road)

xii. Sanibel Fire Control District Station (5171 Sanibel-Captiva Road)

xiii. IWA water tank (5566 Sanibel-Captiva Road)

In areas numbered i.-v. above, antenna support structures, including surmounting appurtenances, are permitted as primary intended uses to a maximum height of 149 feet, AGL.

In areas numbered vi.-xi. above, antenna support structures, including surmounting appurtenances, are permitted as primary intended uses to a maximum height of 120 feet, AGL.

In areas numbered xii. and xiii. above, antenna support structures, including surmounting appurtenances, are permitted as primary intended uses to a maximum height of 85 feet, AGL.

(b) Antennas mounted on a lawful or lawfully existing structure, whether a ground-mounted, structure-mounted or utility pole-mounted facility, at a maximum height of 45 feet, NGVD, including surmounting appurtenances, are permitted as primary intended uses at the locations specifically named below:

i. Common areas within residential developments, such as areas under the ownership and control of a homeowners association or a condominium association.

ii. Parcels in commercial districts.

iii. Parcels approved for institutional uses.

iv. Parcels in the Resort Housing District.

v. Parcels developed with public utility uses.

vi. Public rights-of-way.

vii. Private rights-of-way under the control of a homeowner's association, or similar body, but not including any land which is part of an individual lot.

viii. Parcels approved as a Special Use District.

ix. Multi-family buildings of three (3) or more stories.

x. Golf courses.

xi. Designated City-owned lands.

xii. Public facilities.

Antennas mounted on a support structure, including surmounting appurtenances, whether structure-, ground-, or utility-pole mounted, at a height greater than 45 feet, NGVD, but no higher than 85 feet, AGL, are permitted as conditional uses at the above-named locations.

(3) *Telecommunications devices as Temporary Uses.* Telecommunications devices as temporary uses are permitted at the same locations where telecommunications devices as principal uses are permitted.

f. *Standards and Requirements*

(1) General Standards and Requirements.

The standards and requirements of this subsection f.(1) and the standards under (6) Protection of Historic Sites and Structures; (7) Co-location, and (8) Visual Compatibility, are applicable to all telecommunications facilities and devices, unless the text clearly indicates otherwise.

(a) Compatibility. Telecommunications facilities and devices shall be located, sited and designed in a manner which limits their visual impact on the public view and ensures their compatibility with surrounding land uses.

(b) Color.

i. Antennas or antenna arrays and mounts shall be placed and colored to blend into the architectural detail and coloring of the host structure.

ii. Telecommunications devices not requiring Federal Aviation Administration painting or marking shall have either a non-reflective galvanized finish or be colored to blend in with the background against which they are seen from the public view. The mount and all attachments shall be a single color; either light gray where visible against the sky, or the color of the background against which they are viewed.

(c) Lighting.

Artificial lighting shall be limited to:

i. that which is required by federal law, rule or regulation; or, if not required by federal law, rule or regulation, then any support structure at least 150 feet

in height above ground level (AGL) shall have affixed at the support structure's highest point, a single, blinking red light of a type approved for use by the Federal Aviation Administration (FAA), with the dark interval longer than the lighted interval and shielded underneath.

ii. Security lighting for any equipment, buildings, shelters, or other on-the-ground ancillary equipment and structures, shall be compliant with the outdoor lighting standards of this code. Such lighting, shall be manually operated and used only during night maintenance checks or in emergencies.

(d) Signage.

i. No signage shall be allowed on any telecommunications facility except as required for public safety purposes, or by the FCC or FAA.

ii. No telecommunications device shall have advertising on it or contain any sign or insignias for the purpose of advertising.

iii. The display of required Federal Communications Commission tower registration information is permitted, using the smallest sign face which meets FCC requirements.

(e) Secure Design and Safety.

i. All parts of telecommunications facilities shall maintain clearances from any electricity lines and equipment as required by the National Electric Safety Code (NESC).

ii. Telecommunications equipment shelters shall be of vandal-resistant design or shall be provided with a suitable security barrier.

iii. A controlled access enclosure is required around the base of the mount and equipment shelters of all telecommunications devices as principal uses.

iv. Access to the telecommunications device as a principal use and ground equipment shall be only through a lockable entrance.

(f) Noise. All sound-emitting devices shall comply with the requirements set forth in Sanibel Code of Ordinances, Chapter 12, *Noise*.

(g) Maximum Heights.

i. Telecommunications Devices as Accessory Uses, including surmounting appurtenances, shall not exceed the maximum heights established in the Land Development Code (LDC) for a principal structure located on the same lot or parcel. [Note: Refer to LDC Section I.D.2., Permitted Uses, Required Conditions, and Performance Standards; Preservation and Residential Districts; Section I.D.3., Permitted Uses, Required Conditions, and Performance Standards; Commercial Districts; and Section I.D.6., Resort Housing District, for maximum permitted heights.]

ii. Telecommunications Devices as Principal Uses, including surmounting appurtenances, shall not exceed the maximum heights established in subsection e., Permitted Uses. Devices located outside the areas described in subsection e., Permitted Uses, shall not exceed the maximum heights established for a principal structure on the lot or parcel.

(h) Additional General Standards.

i. All telecommunications devices shall be located and sited so as to minimize the effect on environmental resources, and the City shall have the authority to require special design of the device where findings of particular ecological sensitivity are made.

ii. Foundations for ground-mounted, structure-mounted and utility pole-mounted telecommunications devices shall not disturb, break or penetrate the aquiclude or clay layer at the bottom of the freshwater lens, permit saltwater intrusion or otherwise endanger the integrity of the freshwater lens. If it is necessary to drive pilings below the level of the aquiclude, such penetration shall be sealed according to the best technology available to avoid saltwater intrusion.

iii. To protect the indigenous and migratory bird population found in the City of Sanibel, use of guyed towers where the guy wires extend higher than 45' above ground level, are not permitted.

iv. Guy wires shall only be anchored in the ground, and their anchoring point shall meet the same setback as for any accessory or principal structure on the same lot or parcel.

v. All telecommunications devices shall be subject to periodic reinspections.

vi. Placement of a telecommunications device on a non-conforming structure shall not be considered an expansion of the non-conforming structure provided the device by itself complies with the standards and requirements of this Section I.E.32.

vii. Equipment shelters shall comply with the required setbacks for any principal or accessory uses in the district in which the facilities are located, at a minimum.

viii. The addition of one or more telecommunications facilities or devices, as a principal use, on a lot or parcel already developed with a principal use, shall not be considered a violation of any provision of this code which limits development of a lot or parcel to a single principal use.

ix. All telecommunications devices shall meet all manufacturer's specifications. Any mount or accessory equipment shall be of noncombustible and corrosive-resistant material. Miscellaneous hardware, such as brackets, turnbuckles, clips, and similar equipment, subject to rust or corrosion, shall be protected with a zinc coating either by galvanizing or sheradizing process after forming, or by use of stainless steel fittings, or by equivalent protective processes. These finishes are selected to guard against corrosion and to protect the elements against electrolytic action, due to the use of adjoining dissimilar metals.

x. Where any telecommunications device is attached to, or supported by, a building or separate structure, no part of the device shall impose any undue stress on the building or structure.

xi. All telecommunications devices shall be maintained in good condition and in accordance with all the standards of this section. No additions, changes or modifications shall be made to a device unless the addition, change, or

modification is in conformity with the standards of this section and the Land Development Code. All required permits must also be obtained for additions, changes, or modifications.

xii. Mounts shall be the narrowest feasible at the horizontal measurement to provide the required stability and loading.

xiii. Permanent platforms, exclusive of antennas, that serve to increase the visibility of the telecommunications device from off-site are not permitted.

xiv. All mounts, antennas, and surmounting appurtenances, including attachments thereto, shall be of a type, design, color, and texture which are the least visually obtrusive structures possible, while accomplishing their intended purpose.

xv. If there is an existing structure whose location meets the technical requirements of the proposed antenna, the applicant must first demonstrate why making modification to the existing structure will not meet the applicant's requirements prior to adding an additional or new structure to serve as the antenna support structure.

xvi. At all times each facility shall be insured for liability in an amount of not less than $5 million. For each facility, the applicant or owner shall provide to the city a bond or other security in an amount sufficient to ensure that the facility is returned to its natural state upon abandonment.

(i) Additional Construction Standards.

All telecommunications devices, including support structures, mounts and surmounting appurtenances shall be designed and constructed to meet the following codes and standards:

i. The Sanibel Building Code, which includes a 120-mph wind load, as defined by the American Society of Civil Engineers, Publication No. 7 of 1993 (ASCE 7-93), and the 1997 Standard Building Code, or its then current replacement.

ii. FAA Advisory Circular #AC70.7460-1H.

iii. Electronics Industries Association (EIA) Standards, the then-current revision of EIA/TIA 222.

iv. Wind load analysis and basic wind speed shall comply with the most current EIA standards and local building codes. Where standards differ, the more stringent code shall be used. In no case will the basic wind speed be less than one hundred twenty (120) miles per hour.

(2) Standards for Structure-Mounted Facilities.

(a) No structure-mounted facility shall be guy wire supported.

(b) Height restrictions.

i. The height of all telecommunications devices shall be the minimum necessary, but in no case shall the device extend above the height restrictions established in this subsection.

ii. The telecommunications device shall extend no higher than 12 feet above the roofline of the principal structure to which it is attached, unless the device is concealed in a manner consistent with the visual compatibility standards.

(c) Minimum Setback Standards.

i. Antenna mounts, support structures and surmounting appurtenances shall be sited so as not to constitute a visually obtrusive structure as seen from the public view; however, in all cases the following minimum setbacks shall be met:

aa. The setbacks established for any accessory or principal use in the district in which the facilities are located; or

bb. Twenty-five (25) feet from property lines or open bodies of water; and one (1) foot for each two (2) feet in height AGL, measured from the centerline of the street, whichever is greater.

ii. A telecommunications device that is attached to a principal structure that does not conform to minimum setback requirements shall not be considered to be further extending the nonconformity of the principal structure provided the device meets the same setback as the existing structure.

iii. Increased setbacks may be required for telecommunications devices approved as conditional uses.

(3) Standards for Ground-Mounted Facilities.

(a) General.

The use of existing structures as antenna mounts shall be preferred to the construction of new ground-mounted facilities. An applicant for a new ground-mounted facility as a principal use shall submit a report inventorying the availability of existing structures, including utility poles, within the applicant's search ring which may serve as alternatives to the proposed ground-mounted facility. The applicant must demonstrate that the proposed facility cannot reasonably be accommodated on such existing structures due to one or more of the following factors:

i. The structure provides insufficient height to allow the applicant's facility to function reasonably in parity with similar facilities.

ii. The structure provides insufficient structural strength to support the applicant's antenna and related equipment.

iii. The structure provides insufficient space to allow the applicant's antenna to function effectively and reasonably in parity with similar equipment.

iv. Use of the structure would result in electromagnetic interference that cannot reasonably be corrected.

v. Use of the structure would create a greater visual impact on surrounding land uses than the proposed alternative or otherwise would be less in keeping with the goals, objectives, intent, preferences, purposes, criteria or standards of the Sanibel Plan and the Sanibel Land Development Code.

vi. That no existing support structure will meet the technical requirements of the service provider.

vii. That if an existing support structure does meet the technical requirements of the service provider, it is not available at commercially reasonable terms.

viii. Other limiting factors the applicant wants the City to consider.

(b) Ground-mounted telecommunications facilities shall be of the monopole type, unless the applicant can demonstrate that another type of mount would be less visually obtrusive. In either case, the mount shall be suitable for co-location by another service provider, or may be modified to allow co-location, where the height would be suitable for co-location.

(c) Ground-mounted telecommunications facilities shall be accessible by service vehicles.

(d) Minimum Setback Standards. Antenna mounts, support structures and surmounting appurtenances shall be sited so as not to constitute a visually obtrusive structure as seen from the public view; however, in all cases the following minimum setbacks shall be met:

i. The setbacks established for any accessory or principal use in the district in which the facilities are located; or

ii. Twenty-five (25) feet from property lines or open bodies of water; and one (1) foot for each two (2) feet in height AGL, measured from the centerline of the street, whichever is greater.

iii. Additional setbacks may be required for ground-mounted telecommunications facilities approved as conditional uses.

(e) Ground-mounted facilities shall be the lowest height that will meet the technical requirements of the service provider.

(f) Prior to approval of a new antenna support structure outside of one of the "telecommunications tolerant areas", an applicant shall demonstrate that technological reasons dictate the placement of the structure outside one of the "telecommunications tolerant" areas of the City, or that no technically acceptable "telecommunications tolerant" site is available at commercially reasonable rates.

(g) The addition or relocation of one or more antennas and surmounting appurtenances to an existing ground-mounted facility, which is non-conforming following adoption of this section, shall not be considered an extension of the non-conformity, provided the addition or relocation itself complies with the standards and requirements of this section.

(4) Standards for Utility Pole-Mounted Facilities.

(a) General.

i. Utility pole-mounted telecommunications facilities or extensions on utility poles to accommodate the mounting of antennas shall be of the monopole type.

ii. Equipment shelters associated with utility pole-mounted telecommunications facilities which are located outside of the right-of-way shall meet the setbacks for accessory structures for the zoning districts in which the equipment shelters are located.

iii. A utility-pole mounted facility shall be sited so as not to constitute a visually obtrusive structure as seen from the public view.

(b) Maximum Height. Utility pole-mounted telecommunications facilities shall comply with the maximum height limitations established for the area in which they are located.

(c) Horizontal Separation. Minimum horizontal separation between utility pole-mounted telecommunications facilities shall be determined by the location of the existing utility poles.

(d) Equipment shelters associated with utility pole-mounted telecommunications facilities located in the public right-of-way, shall not interfere with existing public utility uses established in the right-of-way, and shall not create a traffic hazard, and shall not interfere with maintenance of the right-of-way, all as determined by the City Manager.

(e) Equipment shelters located in the public right-of-way shall be screened from public view by means of native vegetation.

(5) Additional Standards and Requirements for Telecommunications Facilities as Conditional Uses.

These standards are instituted to provide an opportunity to place or construct a telecommunications facility or device, which under some circumstances, could be detrimental to other land uses and cannot normally be permitted, but which may be permitted under circumstances particular to the proposed location and subject to

conditions which provide protection to adjacent land uses, which protect the attractiveness, health, safety and property values of the community, which avoid the proliferation of visually obtrusive structures, and which promote the development of an advanced wireless communication infrastructure.

(a) The conditional use procedure may be considered for requests for telecommunications facilities or devices up to 85' AGL proposed to be located in areas identified in sub-subsection e.(2)(b) of this Section I.E.32.

(b) All applications for telecommunications devices as conditional uses must demonstrate compliance with the general requirements for conditional uses provided in Section I.I.2. of this Land Development Code, in addition to the specific standards and requirements found in this subsection.

(c) Specific Standards and Requirements for Telecommunications Facilities as Conditional Uses.

i. The Planning Commission shall find, based on competent and substantial evidence, that the proposed facility is located, sited and designed to be compatible with the character of the general area in which it is located, avoids the need for one or more other visually obtrusive structures, and promotes the development of an advanced wireless communication infrastructure consistent with the Wireless Telecommunications Master Plan and the Sanibel Plan.

ii. In determining whether to grant a conditional use pursuant to this section, the Planning Commission shall consider the following factors:

aa. The height and visual obtrusiveness of the proposed facility;

bb. The degree of visibility from the public view;

cc. The proximity of the facility to residential structures and residential district boundaries;

dd. The character of the uses and structures on adjacent and nearby properties;

ee. The character of the land, including topography and tree cover of the proposed site;

ff. The design of the facility with particular reference to design characteristics that have the effect of reducing or eliminating visual obtrusiveness; and

gg. The degree to which the facility reduces the proliferation of visually obtrusive structures through co-location;

hh. Competent evidence that reasonable alternatives to the proposed conditional use do not exist;

ii. The design of the telecommunications device with particular reference to design characteristics that have the effect of reducing or eliminating visual obtrusiveness;

iii. All conditional use applications for telecommunications devices must demonstrate compliance with the following specific standards:

aa. The lot or parcel is at least large enough to permit the facility to be sited on the lot or parcel where it can meet the setback requirements for telecommunications facilities set out in this Section I.E.32. This standard shall be applied whether the telecommunications device is structure-, ground-, or utility pole-mounted, except where the utility pole is located in a public right-of-way.

bb. Alternative sites are not available and acceptable where telecommunications devices would be less visually obtrusive based upon a showing of radio frequency propagation maps from alternative locations.

cc. There is no space available at existing and approved support structures that have a shared use plan.

dd. The design of the proposed telecommunications device would be less visually obtrusive than other available designs.

ee. The service provided by the proposed telecommunications device will reach service recipients located primarily within the boundaries of the City of Sanibel.

ff. Competent evidence that reasonable alternatives to the proposed conditional use do not exist.

iv. In addition to the application requirements contained elsewhere in this section, the applicant shall submit information sufficient to evaluate the visual impact of the proposed conditional use. This may include, but shall not necessarily be limited to, photo simulations, photo montage or other techniques to illustrate how the telecommunications device will appear from public view.

(6) *Protection of Historic Sites and Structures.*

No telecommunications device shall be installed which detracts from the values of (a) historic sites and structures nominated to, or included on, the Local Register of Historic Landmarks, as provided for in Article I, Part K. Historic Preservation, or (b) properties included in, or eligible for inclusion on, the National Register of Historic Places.

(7) Co-location; Sharing of Telecommunications Facilities.

It is the City's policy to encourage the sharing of telecommunications facilities (co-location) to the extent that through such sharing the telecommunications facilities will become less visually obtrusive or fewer structures.

The following specific standards shall be applied where consistency with the above-stated policy can be demonstrated:

(a) All co-location possibilities must be explored by the applicant before the consideration of construction of a new telecommunications support structure. An application shall include evidence that diligent, but unsuccessful, efforts to co-locate were made. The City will pursue all reasonable strategies to promote co-location, consistent with the above-stated policy.

(b) All new ground-mounted facilities shall be designed and constructed to accommodate shared use when technically feasible and practical.

The owner of the telecommunications mount shall, as an ongoing condition of the required development permit, respond to requests of other service providers, in a timely manner, as to the availability of space on the telecommunications mount.

(c) The design and construction of telecommunications support structures for co-location shall assume that each additional service provider will have loading

requirements comparable to the original proponent. The owner of the device must provide reasonable leasing opportunities to other service providers to use the device.

(d) A reasonable pro rata charge may be made for shared use, or rental rates consistent with prevailing market conditions may be charged, consistent with an appropriate sharing of construction, financing and maintenance costs. Fees may also be charged for any structural or radio frequency changes necessitated by such shared use. Such sharing shall be a condition of approval, if approval is granted.

i. The applicant shall describe what range of charges are reasonably expected to be assessed against shared users.

ii. The applicant shall base charges on generally accepted accounting principles and shall explain the elements included in the charge.

(e) The applicant shall quantify the additional mount capacity proposed, including the number and types of antenna. The applicant shall also describe any limitations on the ability of the mount to accommodate other users, such as, radio frequency interference, mast height, frequency or other characteristics.

(8) Visual Compatibility Standards.

(a) All support structures and attachments thereto shall present the slimmest profile possible, as seen from public views, by utilizing facilities/devices and construction materials and techniques with the smallest feasible diameter, diagonal or horizontal measurement.

(b) To the greatest feasible extent, structure-mounted telecommunications facilities shall be placed on the structure out of public view. When this is not feasible, the use of enclosures or screens made of fiberglass or other material pervious to radio signals is encouraged to conceal the facility from public view in a manner that is compatible with the scale, color, and architectural character of the structure.

(c) When it is necessary to place the telecommunications facility in public view, to the greatest feasible extent, it shall be integrated into the structure in a manner that is compatible with the scale, color, and architectural character of the structure.

(d) To the greatest feasible extent, equipment shelters associated with structure-mounted telecommunications facilities shall be located inside the existing structure, or concealed from public view, or made compatible with the scale, color, and architectural character of the structure.

(e) To the greatest feasible extent, ground-mounted telecommunications facilities shall be sited where they are concealed from public view by other objects such as trees or buildings.

(f) In keeping with the Sanibel Plan, including the Vision Statement, and in efforts to minimize visual impact, carriers shall propose the slimmest profile possible for their transmitting facilities. Carriers shall be required to utilize cross-polarized antennas for purposes of diversity, as opposed to the use of additional antennas for space diversity, unless a carrier includes an engineering demonstration showing that cross-polarized antennas would not provide adequate coverage from the proposed transmitting location. Such showing shall also include a map which depicts the precise areas where coverage would not be satisfactory from a cross-polarized antenna configuration, as compared to a space diversity configuration.

(g) To the greatest feasible extent, equipment shelters associated with ground-mounted or utility pole mounted telecommunications facilities shall be concealed from public view or shall be buffered to be compatible with surrounding land uses.

(h) The telecommunications device, supporting structures and accessory equipment:

i. Shall be designed and colored to sufficiently blend in with the surroundings;

ii. Shall not be made of materials which are bright, shiny, garish or highly reflective of light;

iii. Shall be located and designed so as to minimize visual impact on adjacent properties and from the public streets, rights-of-way, beaches, bodies of water and public view in order to maintain the aesthetics of the City;

iv. Shall be screened by the use of landscaping or architectural features which harmonize with the elements and characteristics of the parcel on which it is located and adjacent properties;

v. Mounts, antennas, towers, equipment shelters, support structures, storage facilities, operations buildings, and auxiliary structures shall be screened from public view to the greatest extent feasible;

vi. Antennas or antenna arrays and mounts shall be placed and colored to blend into the architectural detail and coloring of the host structure;

vii. Telecommunications devices not requiring Federal Aviation Administration painting or marking shall have either a non-reflective galvanized finish or be colored to blend in with the natural environment. The part of the facility that is viewed against the sky and all attachments shall be a single color, either light gray or similar; the part of the facility and all attachments not viewed against the sky shall also be colored to blend in with its background.

viii. The visual impact from public view of telecommunications devices and equipment shelters shall be mitigated through landscaping or other screening materials that effectively screen the view of the telecommunications facility. As a minimum, the following requirements shall be met:

aa. For telecommunications facilities as principal uses, which are ground-mounted or utility pole mounted, a landscape buffer, at least 10' deep shall exist around the perimeter of the mount site; a sufficient number and variety of native trees a minimum of 25' in height at the time of planting shall be used in this buffer to augment the landscape buffer standards found in Section I.G.4. in order to develop an effective buffer; the landscaping shall be placed so as not to interfere with the operation and maintenance of a utility pole's other functions, or maintenance of the right-of-way, where appropriate.

bb. For other telecommunications facilities, the landscape buffer standards of Section I.G.4. shall be used to develop an effective buffer appropriate to the location and size of the facilities.

cc. All landscaping shall be vegetation species native to Sanibel;

dd. All landscaping shall be properly maintained to ensure good health and vitality, and shall be permitted to grow and mature to its full height and fullness.

ee. All landscaping shall be outside required fencing; all existing vegetation shall be preserved to the maximum extent feasible and shall be credited toward meeting this landscape requirement.

(9) Compliance with Requirements of Other Regulatory Authorities.

(a) Telecommunications Devices as Accessory Uses.

All telecommunications devices as accessory uses shall comply with any applicable license required by federal, state or local agency to operate, own or install the device.

(b) Telecommunications Devices as Principal Uses.

i. Prior to receiving a completion certificate, the applicant shall certify in writing that the telecommunications device complies with all current Federal Communications Commission regulations for non-ionizing electromagnetic radiation and radio frequency emission levels.

ii. No telecommunications device shall transmit signal strengths in excess of those allowed under the then-current federal regulations.

iii. The applicant shall certify in writing that the device complies with all current Federal Aviation Administration regulations and with Southwest Florida International Airport Authority requirements.

iv. Documentation must be submitted that the applicant possesses any required licenses by federal, state, or local agencies to operate, own, or install such a device.

g. *Administration.*

(1) *Permit Requirements.*

(a) *Exemptions.*

The following telecommunications devices as accessory uses are exempt from the requirement to obtain a development permit before installing the device, provided the device is installed in accordance with the standards listed. Compliance with

the following listed standards is necessary to protect public safety, to prevent the devices from becoming air-borne missiles in high winds, to prevent devices from falling and injuring persons or property, and to prevent accidental electrical shock. Exceptions apply only to property not included in, or not eligible for inclusion on, the National Register of Historic Places.

i. A "dish" video antenna that is one meter (39.37") or less in diameter and is designed to receive direct broadcast satellite service, including direct-to-home satellite service, and which meets the following standards:

   aa. Setbacks: The same as for any accessory structure on the lot or parcel.

   bb. Height: A maximum of 12 feet above the roofline of the principal building served by the antenna.

   cc. Siting: Not in the actual front yard. Maintain clearance from any electricity lines and equipment as required by the National Electric Safety Code (NESC).

ii. A video antenna that is one meter or less in diameter or diagonal measurement and is designed to receive video programming services via MMDS (wireless cable), and which meets the following standards:

   aa. Setbacks: The same as for any accessory structure on the lot or parcel.

   bb. Height: A maximum of 12 feet above the roofline of the principal building served by the antenna.

   cc. Siting: Not in the actual front yard. Maintain clearance from any electricity lines and equipment as required by the National Electric Safety Code (NESC).

iii. An antenna that is designed to receive local television broadcast signals and which meets the following standards:

   aa. Setbacks: The same as for any accessory structure on the lot or parcel.

   bb. Height: A maximum of 12 feet above the roofline of the principal building served by the antenna.

cc. Siting: Not in the actual front yard. Maintain clearance from any electricity lines and equipment as required by the National Electric Safety Code (NESC).

iv. Satellite Earth Station Antennas which are ground-mounted and either (a) two (2) meters or less in diameter and are located on a lot or parcel zoned for commercial or industrial use, or (b) one (1) meter or less in diameter in any area, regardless of land use or zoning category, and which meet the following standards:

aa. Setbacks: The same as for any structure on the lot or parcel.

bb. Height: A maximum of 12 feet, AGL, when positioned for use.

cc. Siting: Not in the actual front yard. Maintain clearance from any electricity lines and equipment as required by the National Electric Safety Code (NESC).

v. Licensed Amateur Radio Service Antennas:

aa. Setbacks: The same as for any structure on the lot or parcel.

bb. Height: the minimum necessary for operation.

cc. Siting: Not in the actual front yard. Maintain clearance from any electricity lines and equipment as required by the National Electric Safety Code (NESC).

vi. Other accessory antennas which are mounted on or attached to an occupied structure and do not extend more than eighteen inches (18") in any direction from the mounting or attachment point of the antenna, and are blended into the design of the structure to which they are attached by the use of materials, paint, colors, and/or textures, and which maintain clearance from any electricity lines and equipment as required by the National Electric Safety Code (NESC).

(b) *Short Form Development Permit.*

This permit is available for:

i. Telecommunications devices as accessory uses up to the maximum permitted height and for devices for which the City Manager authorized a deviation.

ii. Telecommunications devices as principal uses up to a maximum height of 85'-0", AGL where the device is located in one of the following areas identified as "Telecommunications Tolerant":

aa. The site of the existing WirelessOne tower (701 Opre Avenue)

bb. Sprint Florida telephone switching office (3445 Sanibel-Captiva Road)

cc. The Sanibel School (3840 Sanibel-Captiva Road)

dd. Recreation field next to the Sanibel School

ee. J. N. "Ding" Darling National Wildlife Refuge maintenance yard (3900 Sanibel-Captiva Road)

ff. Lee County Electric Cooperative electrical substation (5050 Sanibel-Captiva Road)

gg. Lee County Electric Cooperative Pine Island to Sanibel Power Transmission Line support poles

hh. Island Water Association (IWA) Reverse Osmosis Plant (3651 Sanibel-Captiva Road)

iii. Telecommunications devices as principal uses up to a maximum height of 60'-0", AGL where the device is located in the following areas identified as "Telecommunications Tolerant":

aa. Sanibel Fire Control District Station (5171 Sanibel-Captiva Road)

bb. IWA water tank (5566 Sanibel-Captiva Road)

iv. Telecommunications devices as principal uses mounted on an existing antenna support structure where there is no increase in height of the existing structure.

v. Telecommunications devices as principal uses up to a maximum height of +45', NGVD, in one of the areas described in sub-subsection e.(2)(b) of Section I.E.32.

(c) *Long Form Development Permit.* This permit is available for:

i. Telecommunications devices higher than 85', AGL, but no higher than 149', AGL, where the device is located in the following areas identified as "Telecommunications Tolerant":

aa. The site of the existing WirelessOne tower (701 Opre Avenue)

bb. Sprint Florida telephone switching office (3445 Sanibel-Captiva Road)

ii. Telecommunications devices higher than 85', AGL, but no higher than 120', AGL, where the device is located in the following areas identified as "Telecommunications Tolerant":

aa. The Sanibel School (3840 Sanibel-Captiva Road)

bb. Recreation field next to the Sanibel School

cc. J. N. "Ding" Darling National Wildlife Refuge maintenance yard (3900 Sanibel-Captiva Road)

dd. Lee County Electric Cooperative electrical substation (5050 Sanibel-Captiva Road)

ee. Lee County Electric Cooperative Pine Island to Sanibel Power Transmission Line support poles

ff. Island Water Association (IWA) Reverse Osmosis Plant (3651 Sanibel-Captiva Road)

iii. Telecommunications devices higher than 60', AGL, but no higher than 85', AGL, where the device is located in the following areas identified as "Telecommunications Tolerant":

aa. Sanibel Fire Control District Station (5171 Sanibel-Captiva Road)

bb. IWA water tank (5566 Sanibel-Captiva Road)

(d) Conditional use approval is required for all telecommunications facilities as principal uses over 45'-0", NGVD, and up to a maximum height of +85'-0", AGL, where the device is located in an area described in sub-subsection e.(2)(b) of Section I.E.32.

(e) A building permit is required for the construction, alteration, relocation, or placement of any telecommunications facility, except for those specifically exempted.

(f) Utility pole-mounted facilities located in public rights-of-way also require authorization of the City Manager by issuance of a license to obstruct the right-of-way.

(g) Section I.A.7., City Exempted.

An application to construct a telecommunications device on City-owned parcels shall be processed under the provisions of Land Development Code Section I.A.7., City Exempted.

(2) *Application Requirements.*

Each application for a development permit to erect a telecommunications device, including a new or replacement support structure, an increase in the height of an existing support structure, to add an antenna to an existing support structure (co-locate), shall be accompanied by the following data and submittals, unless a specific application requirement is waived by the City Manager as being inappropriate or unnecessary for a determination on the application due to the nature of the telecommunications facilities proposed.

(a) The materials required by Section III.B.3. of this code for the submittal of an application for a development permit.

(b) A site plan showing existing development and the type, location, height and setbacks of the proposed device, including foundations, mounts, equipment shelters, cable runs, security barriers, access points, parking areas, lighting, and buffers and landscaping, and any other equipment or structures to be placed at the site.

(c) A site plan showing adjacent properties, public views and all features which screen public views and views from adjacent property.

(d) An inventory showing the location of all waterbodies, wastewater and stormwater facilities and electric power lines impacting the site of the proposed device.

(e) Front, side and rear elevations of the telecommunications device indicating the color and finish, visual screens and enclosures, buffer treatments and lighting, including:

i. Specifications for support structure and mount height and design and including a plan or drawing of cross-sections of the structure

ii. Specifications for the design for any antennas, devices and accessory buildings.

iii. Construction plans showing the method of construction and installation and the manufacturer's specifications.

iv. Description of the mount's maximum capacity, including the number of antennas and their mounting configurations and positions that it can accommodate for collocation, and taking into consideration radio frequency interference, mast height, and other characteristics, as well as options to overcome any problems that these considerations may pose to service delivery.

v. Information sufficient to evaluate the visual impact of the proposed device. This may include, but shall not necessarily be limited to, photo simulations, photo montage or other techniques to illustrate how the telecommunications device will appear from public view.

(f) Certification by a registered professional engineer, licensed by or permitted to provide certifications in the State of Florida, that the device is designed and constructed:

i. To meet the construction standards found in this Section I.E.32;

ii. So that where any device is attached to, or supported by, a building or separate structure, no part of the device shall impose any undue stress on the building or structure.

(g) A location map of the applicant's existing telecommunications devices within the City and within 5 miles of the boundaries of the City of Sanibel, including specific information about the location, height and design of each device.

(h) A report inventorying the availability of existing structures, including utility poles, within the applicant's search ring which may serve as alternatives to the proposed mount. The report shall evaluate why the proposed device cannot reasonably be accommodated on such existing structures.

(i) A map or maps prepared by a radio frequency (RF) engineer providing current radio frequency coverage predictions showing the area to be served before the addition of the new device and a radio frequency coverage prediction map that shows coverage after the new site is operational. The coverage predictions maps shall show the radio propagation from all surrounding transmitting sites which provide coverage to any portion of the City. Technical detail shall be sufficient for an engineer to determine signal levels from the maps and underlying engineering parameters for the proposed devices used to generate the coverage depicted on the map.

(j) A statement of intent that co-locators will be permitted in cases where devices are required or proposed to accommodate more than one provider. The positions of anticipated co-locator antennas on the mount and the space provided for co-locator equipment shelters shall be shown on all site plans and elevations.

(k) Certification by the applicant that, as proposed, the device complies with Federal Communications Commission guidelines for radio frequency emissions. The City reserves the right to require a radio frequency emissions analysis of the proposed

device which may include measurement of existing ambient emissions and projected project and cumulative emissions to demonstrate compliance on a cumulative basis with applicable Federal Communications Commission guidelines.

(l) Certification that, as proposed, the device should not cause harmful electrical interference with any City-operated radio frequency devices in existence at the time of the application, and certification that the applicant acknowledges their obligation to take all steps necessary to resolve any interference that actually occurs.

(m) Certification as to compliance with or exemption from any federal or state regulations applicable to the siting.

(n) Certification that the proposed mount complies with regulations administered by the FAA, FCC and any State reviewing authority, or that the mount is exempt from those regulations.

(o) Description of security measures to be taken in the operation of the device.

(p) Description of liability insurance or binding for the device.

(q) Identify all existing users (including the applicant) on the support structure to be replaced. This listing shall include existing antennas, types and mounting positions for each such user and identify the FCC radio service for each such facility. Applicant shall also identify the proposed location for each such antenna as well as any additional facilities which such user intends to place upon the proposed replacement structure.

(r) For each such existing user, the applicant shall identify any future loading for which it has been requested to reserve capacity for future use. For any such users for which applicant is not reserving future space, it should affirmatively state that applicant has contacted each such user and has been advised that such user does not anticipate requiring any additional support structure capacity at that site in the future.

(s) Applicant shall identify all prospective users of the support structure (not identified above) for which it has either entered into negotiations or agreed to

provide space on the support structure. Applicant shall identify the proposed mounting location for each antenna to be utilized by each such prospective user and identify any future capacity for which applicant has been requested to reserve future loading capacity.

(t) Applicant shall identify all additional capacity which would be available for future co-location use at the proposed structure beyond the co-location users identified in the three items above.

(u) Applicant shall submit a full set of engineering drawings, which drawings shall be stamped by a professional engineer licensed in the State of Florida, specifying the dimensions of all structural members and mounting facilities to be incorporated into the support structure for all loading identified in the four items above, and shall expressly identify each such antenna as having been incorporated into the support structure design. These drawings shall also include the foundation design for the proposed structure. In addition, the PE shall certify compliance with both the then-current EIA/TIA 222 standard as well as the applicable provisions of the Sanibel building code, which includes a 120-mph wind load, as defined by the American Society of Civil Engineers, Publication No. 7 of 1993 (ASCE 7-93), and the 1997 Standard Building Code, or its then current replacement. Where conflicting standards are set forth in those documents, the more stringent standard shall be utilized in the design.

(v) Applicant shall identify any party or parties which have requested co-location on the facilities but for whom capacity is not designed into the structure as set forth above, and shall include a brief explanation as to why that co-location has been disallowed or is not being further considered.

(w) Applicant shall submit a visual simulation of the proposed structure. The representation of the proposed structure shall be to scale and shall include all initial and future co-location antennas (including proposed coaxial cable runs for each proposed antenna) therein. The visual simulation can consist of a physical mock-up of the facility, balloon simulation, computer simulation, photo

simulation or other means which accurately depict the proposed structure as it would be seen from the public view.

(x) Applicant shall include elevation drawings for all equipment shelters and cabinets proposed for the site. Applicant shall set forth the environmental ratings for all equipment cabinets and specify whether the cabinets meet or exceed Bellcore Specification TR-TSY-000487. For equipment buildings, applicant shall identify all materials used for the shell of the building and set forth the wind loading specifications. Applicant shall specify the exterior finishes and materials for all proposed equipment cabinets and shelters.

(y) Applicant shall include its proposal for fencing the compound and shall set forth all proposed screening to be employed around the compound so as to minimize the visual impact of the facilities.

(z) Applicant shall identify whether back-up power will be utilized.

(aa) If back-up battery power is used, proponent shall certify that only sealed type batteries will be utilized.

(bb) If a generator will be used at this site, provide manufacturer, model, specifications, type of fuel, type of fuel storage, and storage tank location and size, and set forth the length of time for which the generation facilities, as proposed, will be capable of providing backup power for all initial and future proposed co-location users at the site. Any co-location users not to be powered by the back-up generation facilities shall be expressly identified as such in the filing. The applicant shall provide documentation sufficient to demonstrate projected noise levels will comply with the requirements set forth in the Code of Ordinances of the City of Sanibel, Chapter 12, Noise.

(cc) Applicant shall include any other information or materials which it wishes the City to consider in acting upon its proposal.

(dd) Provide a vertical profile sketch (or other "to scale" rendering) of the existing structure both with and without the proposed addition to that structure.

(ee) Provide a copy of the FCC authorization under which the proposed facilities would be operated and provide a brief description of the services to be offered by

the proposed facilities including a listing of the specific frequencies which are currently operating and which the proponent proposes to add to this facility.

(ff) Provide construction drawings, certified by a Professional Engineer licensed in the State of Florida showing all details of the existing structure as well as all proposed construction or alteration to the existing structure, and shall include a written certification as to the structural integrity of the existing structure. The certification shall set forth the basis upon which the Professional Engineer determined the structural integrity of the existing structure and shall attest to that structure's ability to accommodate the proposed additional loading while maintaining compliance with all applicable wind loading requirements. This analysis shall identify all existing and proposed additions to the supporting structure considered in the analysis.

(gg) Provide site plat certified by a surveyor licensed in the State of Florida showing all existing and proposed details of the site including all buildings, equipment cabinets, buried and overhead cabling associated with the existing and proposed equipment at the site, electric power, telephone interconnection, gas, cable, grounding, back up power equipment and fuel storage, as applicable.

(hh) Provide a copy of the FAA clearance for the structure. The FAA clearance shall include clearance for both the height of the structure as well as the frequencies which are proposed to be added to the structure.

(ii) If FAA marking or lighting are required due to the proposed modification of the existing structure, applicant must propose the use of an FAA-approved dual lighting system or include a copy of the FAA's denial of applicant's request for approval of such dual-lighting.

(jj) Identify any surmounting appurtenance which will increase the height of the existing structure. The proponent shall include a detailed engineering analysis establishing why the proponent would be unable to utilize the existing structure for its proposed facilities without increasing the height of the structure.

(kk) Identify whether any portion of the proposal would be an action requiring an Environmental Impact Statement pursuant to 47 CFR §1.1305, or requiring an

Environmental Assessment pursuant to 47 CFR §1.1307, and, if so, include a copy of the application for FCC approval.

(ll) The proponent shall include a certification by a radio frequency engineer, technically qualified and competent to address the issues, that the proposed facilities would be in compliance with all RF exposure requirements as required by the FCC. This certification shall identify all existing and proposed operations at the radio site (by frequency, antenna mounting location and effective radiated power). The proponent shall submit a certification by the owner of the structure certifying that all of the facilities in operation and proposed for the site are specifically identified in the foregoing engineer's certification.

(mm) Provide FCC type-acceptance number for each proposed transmitter.

(nn) The applicant shall include a certification of a radio frequency engineer, qualified to practice before the FCC, that the proposed facilities are not expected to pose any potential interference problem to over-the-air reception devices or other common consumer electronic devices of local residents in proximity to the structure. The proponent shall include a certification by a principal of the proponent that any such actual interference resulting from the operation of the proposed facilities will be resolved by the proponent and, if it cannot be resolved, that the proponent will promptly cease operation of the interfering facilities until such interference can be resolved.

(oo) For wireless communication services, provide a clear, concise map at a scale sufficiently large to accurately depict the expected coverage area and levels of service for the proposed facility.

(pp) Include all relevant market boundaries, city boundaries, interstates, highways, streets and roadways.

(qq) Include predicted received signal levels (in-dBm) in 5dB increments with the lowest predicted level no less than the proposed system's portable threshold values and identify what each of these service levels mean in laymen's terms (i.e., indoor portable coverage, in-car portable coverage, outdoor portable coverage).

(rr) Identify on the map the proposed site, and all facilities within or providing service to the city limits.

(ss) The application shall provide a detailed listing of all equipment to be placed at the site or on the existing structure. The application shall include an acknowledgment by a principal of the proponent that any permit issued as a result of the subject filing is expressly limited to the equipment specifically identified therein and, that other than for the maintenance, repair or replacement of such equipment with the same manufacturer and model number, no other equipment shall be added to the site without the receipt of an additional permit for the addition of any such equipment. Such additional permit shall only be issued in response to an additional filing which contains all information required herein.

(tt) If the proposed facility is intended to provide communications to the public or to emergency personnel, the filing shall include information regarding the ability of the proposed facilities to maintain operation during times of emergency. Specific reference shall be made to any emergency 911 or E911 call routing capabilities.

(uu) Provide manufacturer, model and specifications (mechanical and electrical) of each building or cabinet being proposed herein and describe the purpose of each.

(vv) If HVAC is to be used, then information shall be provided with respect to the noise level during operation (specified in decibels) which will be heard at the nearest property boundary.

(ww) In addition to the proposed facility, the proponent shall identify how many additional sites it foresees needing in 1/3/5/10 years. With respect to any facilities which are envisioned within the next 24 months, the proponent shall set forth whether the construction of the facilities as proposed in this filing will increase or decrease the likelihood that those additional facilities can also be accommodated on other existing structures. With respect to any facilities which the proponent intends to seek a permit for within 12 months of the filing of the instant application, the proponent shall specifically identify the location of such additional structure and shall identify whether that additional site is an existing structure or, if not an existing structure, how the proposed co-location was

designed so as to minimize the number and size of any new structures to be proposed.

(xx) Due to the abundance of valuable wildlife and vegetation and migratory birds that inhabit the City of Sanibel, applicants shall submit to the City environmental information concerning the impact a telecommunications device could have at a proposed site. An environmental assessment report pursuant to Section III.B.11. may be required.

(yy) Where required by the National Environmental Policy Act of 1969 (NEPA), or 47 CFR 1.1305 or 47 CFR 1.1307, applicants shall submit a copy of the Environmental Impact Statement or Environmental Assessment, as appropriate, prepared for the Federal Communications Commission, including a demonstration of compliance with FCC RF exposure guidelines.

(zz) All applications shall be accompanied by all information required to establish the need for local services, establish an inability to provide service from available sites in neighboring jurisdictions, the methods of design or construction of devices to be used to provide local service, and coverage studies demonstrating the design and ability of the proposed device to provide local services, as well as the neighboring or regional facilities with which the proposed devices will or can communicate.

(aaa) As part of its application, the carrier shall submit its design criteria, in terms of received signal strength (stated in dBm), for providing coverage from the proposed site. Carrier shall also include a map depicting the predicted coverage (in terms of received signal strength) for the facilities as proposed.

(bbb) Where a carrier presently operates one or more transmitting sites in the City of Sanibel, as part of any application for additional transmitting sites, the carrier shall submit a map showing how the proposed cell site is expected to enhance coverage in the City. If the proposed transmitting facility is being proposed to enhance coverage within an area previously depicted by carrier (in conjunction with an earlier application) as receiving adequate signal strength, based upon carrier's previously submitted design criteria, as part of any such application for

an additional transmitting site, carrier shall include actual field measurements depicting all areas where actual coverage is below that which was previously predicted. Carrier shall also include a showing as to what steps it has taken in an effort to enhance coverage from any existing site(s) and why the addition of another transmitting facility is the only feasible way to provide the requisite coverage. Carrier shall include an explanation for the variance between the previously predicted coverage and the measured signal strength, as well as an affirmative demonstration as to why the same variance between predicted and actual coverage from the proposed facilities is not expected to be repeated.

(ccc) As part of any showing for a new or additional transmitting site, the proponent shall include a demonstration of why it cannot, through the use of antenna combiners or other filters, utilize any existing antennas on an existing transmitting site to provide substantially the same coverage.

(3) *Deviations.*

The City Manager is authorized to approve a deviation from the coverage, clearance, developed area and setback standards found in this Land Development Code for telecommunications devices as accessory uses at all locations, and as principal uses for devices located in "telecommunications tolerant" areas only. The City Manager is also authorized to approve a deviation to height standards for telecommunications devices as accessory uses which are exempt from the requirement to obtain a development permit under Section g., Administration, sub-subsections i. through iv. of (1), Permit Requirements, (a) Exemption.

In considering applications for deviations under this subsection, the City Manager shall use the standards found at Land Development Code Section III.C.2. No deviation approved under this subsection shall frustrate the underlying purpose and intent or policies of this ordinance.

(4) *Applicant Certifications.* Prior to the issuance of the Completion Certificate required by Section III.K.3., or a Certificate of Occupancy, the applicant for a Telecommunications Device, as a Principal Use, shall furnish the City with the following certification(s):

(a) *Radio Frequency (RF) Emissions.* Each applicant shall certify that it is in compliance with the Federal Communications Commission's (FCC) RF emissions rules as they relate to human exposure. Such certificate shall be furnished with respect to both new devices and each proposed addition to a radio site. The certification shall be furnished by an individual with demonstrated competence in the field of RF emissions.

(b) *Environmental Rules.* Each applicant shall certify that it is in compliance with the FCC's environmental rules, as well as the Florida Department of Environmental Protection Agency requirements. The certification shall be furnished by an individual with demonstrated competence in the field of FCC's environmental rules.

(c) *FCC/FAA Marking and Lighting Requirements.* Each applicant shall certify that the construction and operation of its proposed device is, and will remain, in compliance with Part 17 of the FCC's rules and satisfies the FAA's rules and regulations. The certification shall be furnished by an individual with demonstrated competence in the field of FCC/FAA marking and lighting requirements.

(d) *Certification of Compliance with All Applicable Standards and Codes.* The applicant shall certify that the proposed use, engineering design, manufacture, construction, and safety are in accordance with the latest revision of industry codes, design guides, and applicable standards in effect at the time of issuance of the permit. In addition, the applicant shall certify that all applicable federal, state, and local codes and standards have been observed, and that the devices have been installed in accordance with the approved plans.

(5) Assignment and Subleasing of Telecommunications Devices as Principal Uses.

(a) Telecommunications devices, sites or permits may not be sold, transferred or assigned until the assignee obtains approval from the City of Sanibel, except in conjunction with the sale or transfer of the underlying FCC license, provided written notice is given to the City within 30 days of consummating such transaction. When prior City approval is required, such City approval shall be

granted upon determination by the assignee that it has the capability of complying with the on-going obligations of this ordinance.

(b) Sublease of a telecommunications device shall not be entered into by any provider until the sublessee has obtained a development permit from the City of Sanibel for the telecommunications device, or the sublease is conditioned on sublessees receipt of a development permit, prior to commencing any construction.

(c) Potential providers may not claim that a permit should be issued by the City of Sanibel for an assigned or subleased telecommunications device on the basis of any expense incurred in relation to the device.

(6) Inspection and Right of Entry.

The City may inspect any telecommunications device that is a principal use to ensure that the mount and its antennas and equipment shelters are being maintained in compliance with the standards of this section.

Upon a determination that a telecommunication device does not comply with the standards of this section, or constitutes a danger to persons or property, the owner of the device shall have 30 days to bring the device into compliance.

(7) Abandonment.

If the use of any telecommunication device, or any portion of a telecommunication device has been discontinued for a period of 180 consecutive days, the telecommunication device shall be deemed to be abandoned.

(a) Upon a determination of abandonment, the owner or operator of the telecommunications device shall have 90 days within which to:

i. Reactivate the use of the telecommunications device; or

ii. After submitting an application to the City of Sanibel to do so, transfer the telecommunications device to another owner or operator which makes actual use of the device within 45 days following the completion of the transfer; or

iii. Dismantle and remove the telecommunication device, or any unused portion thereof. All costs associated with dismantling and removal of the device shall be borne by the owner or operator of the telecommunications device.

(b) The owner of the abandoned telecommunications device and the owner of the property where the device is located shall be under the duty to remove the device and restore the property to its pre-existing condition. If it is not removed within 60 days notice from the City requiring removal, the City may remove it and restore the property to its pre-existing condition. The cost of removal and site restoration shall constitute a lien upon the property.

(c) Delay by the City in taking action shall not in any way waive the City's right to take action.

(8) Violation of this Section.

(a) Any use of a telecommunications device which is established, operated, erected, moved, altered, or maintained contrary to this section is unlawful and a public nuisance subject to the penalties in Section III.L.2. of this code.

(b) Enforcement of this action will be carried out pursuant to Article III., Part N. of the Land Development Code.

Section 5. Section III.C.2. of the Sanibel Land Development Code is hereby amended to add a new subsection f., which shall read as follows:

Section III.C.2. Standards.

. . . .

f. *Variances from the Standards for Telecommunications Devices.*

For a variance to be granted, the Planning Commission or City Manager, where authorized, shall find, as appropriate to the type of device:

(1) That the application meets the standards set out in subsection III.C.2.a. of the Land Development Code;

(2) That the requested variance will not adversely affect adjacent and adjoining properties;

(3) That the proposed telecommunications device will be compatible with the existing contiguous uses or zoning and compatible with the general character and aesthetics of the neighborhood or surrounding area, considering the design and height of the telecommunications device, the mitigating effect of any existing or proposed landscaping, fencing, or other structures in the area, and the proximity of the telecommunications device to existing or proposed buildings or structures.

(4) That the requested variance is necessary to permit the accessory device to transmit or receive an acceptable quality signal within the meaning and intent of the Telecommunications Act of 1996 (the Act), and any rules, regulations or orders promulgated pursuant to the Act.

(5) That the requested variance is necessary to secure improvements in the communications systems used by public safety organizations during emergencies.

(6) That the requested variance is necessary to the development of an advanced wireless telecommunication infrastructure.

Section 6. Section VII.B.2. of the Sanibel Land Development Code is hereby amended to add a new subsection d., which shall read as follows:

Section VII.B.2. Commercial and Other Nonresidential Development.

Fees set forth in this section are for principal commercial or nonresidential structures only. Fees for accessory uses and structures are set forth in Section VII.B.3. of this land development code and are in addition to the fee for the principal structure.

. . . .

d. Telecommunications devices as a principal use: One-half of one percent of the estimated cost of the telecommunications devices, but not less than $500.00.

Section 7. Section VII.B.3. of the Sanibel Land Development Code is hereby amended to delete the existing subsection b. and to substitute a new subsection b., which shall read as follows:

Section VII.B.3. Accessory Uses and Structures.

. . . .

b. Telecommunications devices as an accessory use: One-half of one percent of the estimated cost of the telecommunications devices, but not less than $25.00 or more than $500.00.

Section 8. Section VII.B.6. of the Sanibel Land Development Code is hereby amended to add language to the first paragraph and to add a new subsection x., which shall read as follows:

Section VII.B.6. Development Permits to Implement Conditional Use Approval.

Fees set forth in this section are for development permits required to implement conditional use approval granted by the planning commission pursuant to Article I, Part I and Section I.E.32

of this land development code. Development permit fees set forth in this section are in addition to conditional use application fees set forth in Section VII.D.3. of this land development code.

Fees for conditional use development permits as listed below correspond to the land development code section which sets forth specific requirements for the use.

. . . .

x. Telecommunications devices (land development code section I.E.32.): One-half of one percent of the estimated cost of the telecommunications devices, but not less than $500.00.

Section 9. Section VII.D.3. of the Sanibel Land Development Code is hereby amended to add a new subsection x., which shall read as follows:

Section VII.D.3. Conditional Use Applications.

Fees listed below are for requests for planning commission approval of conditional use applications filed pursuant to Land Development Code Article III, Part F. A development permit is required to implement the use and may be filed concurrent with or subsequent to an application for conditional use approval. Fees for development permits to implement conditional use approval are in addition to the fees listed below and are set forth in Section VII.B.6. of the land development code. Fees for conditional use applications as listed below correspond to the land development code section which sets forth specific requirements for the use.

. . . .

x. Telecommunications devices (land development code section I.E.32.): One-half of one percent of the estimated cost of the telecommunications devices, but not less than $1,000.00.

Section 10. Codification.

The city manager is hereby authorized and directed to cause the amendments approved herein to be incorporated into the adopted Land Development Code.

Section 11. Conflict.

All ordinances and parts of ordinances in conflict herewith shall be and the same are hereby repealed. If any part of this ordinance conflicts with any other part, it shall be severed and the remainder shall have full force and effect and be liberally construed.

Section 12. Severance.

If any section, subsection, clause, or phrase of this ordinance is held to be invalid for any reason by a court of competent jurisdiction, it shall be deemed a separate, distinct, and independent provision, and such holding shall not affect the validity of the remaining portion of application hereof.

Section 13. Effective Date.

This ordinance shall take effect immediately upon adoption.

DULY PASSED AND ENACTED by the Council of the City of Sanibel, Lee County, Florida this 2nd day of November, 1999.

AUTHENTICATION:

Mayor

City Clerk

APROVED AS TO FORM: Robert D. Pritt
City Attorney

11/2/99
Date

1/5/99, 1/19/99, 2/2/99, 3/2/99, 4/6/99, 10,19,99 First Reading & Continued Rdgs.

12/23/98, 1/12/99, 1/28/99, 2/23/99, 10/11/99, 10/27/99 Publication Dates

11/2/99 Second Reading

Vote of Council members:

Brown	Aye
Hillebrandt	Aye
Janes	Aye
Reding	Aye
Theiss	Aye

Date filed with City Clerk: Nov. 3, 1999

ORDCA754-DRAFT18-11-2-99.TELECOM

MINUTES
COUNCIL OF THE CITY OF SANIBEL
REGULAR MEETING - OCTOBER 19, 1999

Mayor Janes called the meeting to order at 9:02 a.m. He gave the invocation and led in the Pledge of Allegiance. There were 20 members of the public present at the beginning of the meeting.

Councilmembers Present: Councilmember Steve Brown
Mayor Robert P. Janes
Councilmember Bill Hillebrandt
Vice Mayor Andrew Reding
Councilmember Nola Theiss

Staff Present: City Manager Edward L. Sealover
City Attorney Robert D Pritt

Item 2: Proclamation - Invasive Plant Awareness Week - Conservation Officer Dan Clark accepted the proclamation.

Item 3: Public Comments

Chamber of Commerce Executive Director Keith Trowbridge distributed an *Information Guidebook* developed by the Chamber as a reference manual for visitors and residents. He said the Chamber is also training volunteers to assist visitors in getting around the island.

Ray Grizzell recommended a referendum on compensation for City Council.

Louise Johnson agreed. She also requested that the City establish its own hurricane "Hotline Number." City Manager Sealover advised that this is being addressed along with other hurricane issues. Mrs. Johnson also recommended that consideration be given to opening Island Inn Road while Rabbit Road is closed to through traffic. On another issue, the City Manager assured Mrs. Johnson that West Gulf Drive will be revegetated following completion of the sewer project.

Henry Glissman reported on the conditions at the weirs and the effectiveness of flood control.

Item 4: First Reading and Public Hearing of AN ORDINANCE RELATING TO TELECOMMUNICATIONS; AMENDING SUBSECTION I.B.2.c. OF THE LAND DEVELOPMENT CODE OF THE CITY OF SANIBEL TO DELETE THE DEFINITION OF EARTH STATION; AMENDING SUBSECTION I.C.1.c. BY ADDING AN OVERLAY DISTRICT MAP ESTABLISHING PERMITTED USE DISTRICTS FOR TELECOMMUNICATIONS DEVICES; AMENDING SECTION I.E.10., HEIGHT EXCEPTIONS, OF THE LAND DEVELOPMENT CODE; AMENDING SECTION I.E.32. TO REFLECT CHANGES MADE NECESSARY BY THE TELECOMMUNICATIONS ACT OF 1996; ADOPTING A WIRELESS TELECOMMUNICATIONS MASTER PLAN; PROVIDING REGULATIONS FOR TELECOMMUNICATIONS DEVICES; AMENDING SECTION III.C.2. TO PROVIDE VARIANCE STANDARDS FOR TELECOMMUNICATIONS DEVICES; AMENDING SECTIONS VII.B.2., VII.B.3., VII.B.6. AND VII.D.3. TO ESTABLISH APPLICATIONS FEES FOR TELECOMMUNICATIONS DEVICES; PROVIDING FOR CODIFICATION; PROVIDING FOR CONFLICT AND SEVERANCE; AND PROVIDING AN EFFECTIVE DATE.

Louise Johnson agreed that all approved sites would be developed. To calm fears of litigation, she suggested contacting legislators to encourage changes to the legislation.

Dick Walsh recommended a public hearing for every application, and also that keeping costs to carriers high would result in fewer carriers.

Laura Bellflower, law firm for Nextel, pointed out that just because sites are designated does not mean they will be available, and argued that reducing the number of preferred sites would create monopolies of landlords who could then charge exorbitant rates.

Discussion continued regarding determination of "tolerant" sites. Councilman Brown pointed out even if sites are narrowed down, carriers can still make applications for other sites. Mr. Kurtis noted one of the reasons for recommending tolerant areas is to keep applicants from asking for more objectionable sites. Director Rogers provided additional information on conditional use permits, which must meet standards and conditions. Councilmember Theiss wished to eliminate the Sprint site as a possibility for any more "ugly" towers. Vice Mayor Reding moved to add a site at the Lighthouse. Trimming of Australian pines on the east end was also discussed.

During review of the ordinance, Director Rogers explained why the Lighthouse and other public parks and environmentally sensitive lands were not included, noting to do so would require the *Purpose and Intent* section of the ordinance to be amended. He also asked that the Sprint tower not be eliminated because it would become nonconforming and not available for collocation. Director Rogers recommended eliminating references to "fall zones" (area around tower allowing for collapse of a tower or falling debris), which led to a discussion of liability.

Following a break for lunch and hearing of the scheduled 1:30 p.m. item, Council returned to consideration of the telecommunications ordinance. Mr. Stott gave an overhead presentation showing photo simulations of different antennas on "tolerant" sites. It was then agreed that a page-by-page review would be done to determine changes for the next hearing. Following an in-depth review, including clarification from staff and consultants and public input, the following changes were made:

Page 2 - Insert "The Sanibel Vision Statement states" at beginning of first two WHEREAS clauses.
Remove City Hall site (by 3-2 vote, Councilmembers Brown, Hillebrandt and Reding supporting), keeping existing tower.
Remove IWA Water tank site at 1400 Periwinkle Way.
Page 11 - strike "taller" from last sentence in first paragraph.
Page 12 - change maximum height to 149'.
Page 15 - change height requirements.
Page 20 - change definition (31) (a) to "at ground level from a public street."
Add requirement of insurance liability of not less than $5 million; applicant or owner to provide to the city a bond or other security in amount sufficient to ensure that facility is returned to its natural state upon abandonment.
Page 29 - strike "fall zone" standards, also all other references.
Page 39, (7) - add reference to "fewer structures."
Page 42, aa. - add "and variety" with regard to native trees.
Page 43 - insert Section g.

Page 45, bb. - delete references to height
Pages 46 & 48 - delete 1400 Periwinkle references.
Page 62, insert "accessory" before device

Laura Bellflower, Nextel, asked staff to try to clean up "inconsistencies" on page 49. She agreed to advise staff of her specific concerns.

Councilman Hillebrandt requested that staff research the grandfathering issue further across the board for all ordinances. He also expressed a strong concern with the strong, preemptive role taken by the FCC (page 44), and will pursue it further with staff.

Matt Uhle, Sprint Florida, Inc., said his biggest concerns were with the insistence on monopole towers and opposition to grandfathering of non-conforming structures. He pointed out problems with microwaves being mounted on monopoles, as well as concerns with other equipment, and stated he would send Director Rogers a list of questions concerning the Sprint site.

Mayor Janes declared a First Reading and scheduled the Second Reading and Public Hearing for November 2, 1999 at 9:30 a.m.

Item 5: Public Hearing on petition of BFI Waste Systems of North America, Inc. for rate adjustments of garbage and trash disposal and A RESOLUTION APPROVING A RATE STRUCTURE CHANGE FOR BFI WASTE SYSTEMS OF NORTH AMERICA; AND PROVIDING AN EFFECTIVE DATE.

City Manager Sealover read the title. Public Works Director Gates Castle explained BFI was the low proposer when the City went out for bids for garbage and trash disposal last year. Rates come up for review every year. Rory Amundsen, BFI, explained the proposed changes. He also said he would check on questions regarding collection days and late pickups. There was no public comment. **Councilman Hillebrandt moved approval, Councilman Brown seconded and the resolution was approved by unanimous vote.**

Item 6: Mayor and Councilmembers - Items and Reports
Item 6a: Paul A. Piller and Associates' Lobbying Services (Mayor Janes)

Mayor Janes explained an RFP prepared by Lee County came back written in terms that were too general. The City Manager explained he recommended changes to Lee County, which were all adopted. Cape Coral has signed a separate agreement with Paul Piller. Councilman Brown stated his support for a separate agreement for Sanibel also, tailored to Sanibel's needs as recommended by the City Manager. Following brief discussion, there was consensus for the City Manager to negotiate a separate agreement with Paul Piller, tailored to Sanibel's needs.

CONSENT AGENDA

Item 7: Items pulled for discussion by Council or staff. – Councilman Hillebrandt pulled item 8a.

October 19 meeting, including establishment of thirteen telecommunications tolerant areas." With the proper heights, service providers could use the short-form permitting process for these sites. City Attorney Pritt stated that any substantive changes would require an additional hearing. Council discussion ensued.

Councilman Hillebrandt raised several issues which were addressed satisfactorily by Director Rogers and Mr. Kurtis with no changes directed. There was an extended discussion of Councilman Brown's concerns with abandonment issues. Director Rogers, Mr. Kurtis and the City Attorney clarified that regulations regarding abandonment already in place, as well as the bond requirement, will cover these concerns, and no changes were directed. Mayor Janes called for public comment.

Bob Shuford, who said he has extensive experience with microwave radios, expressed his opinion that the ordinance approaches this complicated subject thoroughly.

Louise Johnson recommended that structures between 45 and 80 feet should require public hearings. She also recommended changing language on page 10 to say service provider "may" (not will) need multiple sites. Council agreed, also with Vice Mayor Reding's recommendation to delete "all" and just say "service providers" in the same sentence.

Al Rosenhech recommended a better definition of service provider, that there should be cell-phone free areas and a limit to the number of companies that can provide service (which it was explained is prohibited by federal statutes).

Dick Walsh suggested solving the abandonment questions by placing conditions in the application form.

John LaGorce expressed concerns that "applicant" applies both to company and carrier and also with language on page 60 regarding abandonment, both of which were addressed satisfactorily by staff, Mr. Kurtis and Laura Bellflower, attorney for Nextel. Vice Mayor Reding added additional concerns, but said he would accept staff and attorney explanations.

Bob Shuford discouraged use of the Sanibel School and recreation field sites because of related health issues. It was explained local governments can only require compliance with FCC rules, and also the school board's policy is not to permit wireless facilities on school property.

Staff summarized non-substantive changes (scriveners errors), to be made:
Page 2 – insert "The Sanibel Vision Statement states" in third WHEREAS.
Page 6 – Delete "by some" in second to last sentence, to state … "man-made structures are viewed as intruders"…
Page 7 – Figure 2 changed to Figure 3 in first paragraph text.
Page 10 – Delete "all" from service providers and change "will" to "may" in last paragraph.

Page 39 – In (7), change last line to state " ..become less visually obtrusive or **result in** fewer structures."
Eliminate all references to "fall zone."

Councilmember Theiss moved to adopt the ordinance as corrected with scriveners errors. Vice Mayor Reding seconded and the ordinance was adopted by unanimous vote.

Item 6: Mayor and Councilmembers' Items and Reports

Councilmember Theiss reported on meetings being held in an effort to save the Tarpon Bay Environmental Lab.

She also read into the record a statement giving her thoughts on Council's function with regard to City government, recommending that Council discuss the issue to get consensus, if not on issues, at least an understanding what Council's job is. Other Councilmembers agreed the issue should be discussed. Councilman Brown suggested holding a special meeting, perhaps a team-building workshop, to give Councilmembers more time to prepare.

Councilman Hillebrandt reported on a new program to educate newcomers and residents on environmental rules and regulations.

Mayor Janes reported on a Lee County Commission meeting on the proposed transfer of development rights on Buck Key. He said he would be unable to attend the November 22 meeting, and there was consensus that it was important for the City as well as other Sanibel and Captiva representatives to attend. There was further discussion of meetings planned with other entities and general agreement for a coordinated presentation. The City Manager was directed to brief Council on the Buck Key issue at the November 16 Council meeting.

Item 7: Items pulled for discussion by Council or staff. - None

Item 8: Approval of A RESOLUTION APPROVING AND ADOPTING ITEMS SET FORTH ON THE CITY COUNCIL CONSENT AGENDA; AND PROVIDING AN EFFECTIVE DATE.

The City Manager read the title. **Vice Mayor Reding moved approval, Councilman Brown seconded and the consent agenda was approved by unanimous vote.**

Item 8a: Consideration of A RESOLUTION DETERMINING THE REQUEST OF TOM GILLIS TO SERVE LIQUOR AT A "THANK YOU" GET TOGETHER FOR THE SANIBEL-CAPTIVA POWER SQUADRON AT BARRIER ISLAND GROUP FOR THE ARTS; AND PROVIDING AN EFFECTIVE DATE.

Mayor Theiss asked if there were any road construction scheduled during the season.

Councilmember Workman requested returning to the Senior Presentation on the agenda because there was a large gathering of citizens present.

Senior Presentation regarding senior activities/camping/kayaking. (Helene Phillips, Recreation Director and Jane Klasing, Senior Programs Administrator)
Helene Phillips, Recreation Director spoke to Council regarding recent senior programs and the involvement of Jane Klasing as Senior Programs Coordinator over the last five (5) years. She also shared with Council a recent camping/kayaking trip made by ten (10) seniors to central Florida.

Ms. Klasing spoke to Council regarding their support of the Senior Programs. She also explained the Senior Programs have passive recreation as well as active recreation.

Councilmember Workman expressed her amazement at the number of seniors (600 to 700) that participate in Sanibel Senior Programs.

Councilmembers Comments Continued:
Mayor Theiss again asked Mr. Sealover if there was any major road construction scheduled during high tourist season?

Mr. Sealover replied there would be no construction during high traffic season except for the improvements to the Donax Plant. The collection system is scheduled after high traffic season.

Mayor Theiss asked if the City is responsible for watering of the new plantings.

Mr. Sealover replied the City is responsible for watering, but since these plantings were indigenous they are supposed to be drought resistant.

Mayor Theiss announced that on January 9th, a presentation is to be made by Dr. Judith Cower from the Mayo Clinic on prostate and breast cancer at the Community Center from 7:30 p.m. to 8:30 p.m. with coffee from 7:00 p.m. to 7:30 p.m.

Mayor Theiss also mentioned a conversation with Mr. Wyckoff regarding agenda items and he suggested having a pre-agenda meeting the week before Council meetings with Mr. Sealover, the Mayor and Department Directors.

Council agreed by consensus the pre-agenda meetings were a good idea.

Vice Mayor Walsh also suggested distribution of a draft agenda for Council members prior to release to the newspaper.

First Reading on AN ORDINANCE OF THE CITY OF SANIBEL, FLORIDA ASSESSING A FEE ON TELECOMMUNICATIONS COMPANIES THAT OCCUPY MUNICIPAL RIGHTS-OF-WAY FOR TELECOMMUNICATIONS FACILITIES;

7c

PROVIDING FOR WHEN PAYMENTS ARE DUE; PROVIDING FOR INTEREST; PROVIDING FOR REVIEW OF RECORDS; PROVIDING A SAVINGS CLAUSE; PROVIDING FOR CODIFICATION; PROVIDING FOR CONFLICT AND SEVERANCE; AND PROVIDING AN EFFECTIVE DATE.

Mr. Sealover read the title of the ordinance and explained the ordinance was a model ordinance as it relates to a new state law passed during the last legislative session regarding telecommunications.

Mr. Sealover noted the public hearing would be scheduled for January 16 at 9:30 a.m.

Consent Agenda:
Councilman Brown pulled item (a).

(a) **Approval of Minutes – December 19, 2000 Regular meeting.**

Councilman Brown called Council's attention to page 9 of the December 19th minutes regarding sewer rates. He suggested having a work session so all citizens could ask questions and understand the new sewer rates. He asked if there was a time citizens could pay a reduced rate before the sewer expansion.

Mr. Sealover replied citizens were given the opportunity to pay a reduced rate for sewer hook-up.

Mayor Theiss asked when the ERC (equitable residential connections) discussion would be revisited at a Council meeting.

Mr. Sealover replied he asked Hartman and Associates to have a presentation ready at the February 6th Council meeting.

Discussion ensued regarding having a Council work session for citizen input and questions and a decision was deferred until after the February 6th meeting.

Councilman Harrity called Council's attention to page 12 reading the following, ***"Mayor Theiss made a motion, seconded by Councilmember Workman to approve the members of the Historical Committee. Councilman Harrity voted against the motion…"*** Councilman Harrity explained he did not vote against the motion.

Mr. Sealover explained that in governmental accounting an enterprise fund is treated differently than the general fund. He continued to explain general funds, by noting unexpended monies lapse into the fund balance if they are not designated or reserved. In governmental accounting enterprise funds have retained earnings that stay with that fund and do not lapse into the general fund to be mixed and mingled with other revenues.

Vice Mayor Walsh asked Mr. Sealover if the enterprise fund was a separate entity or corporation?

Councilmember Workman suggested the traffic problem would come up during the "Shared Vision" meetings.

Ed Carsten spoke to Council regarding executive sessions, traffic, and build out.

Council recessed at 10:28 a.m.

Council reconvened at 10:39 a.m.

Council Comments:
Councilman Harrity spoke regarding impact fees for the Lee County Schools and the letter he received from Jill Dillon suggesting impact fees be imposed on builders for new construction. He suggested a resolution be prepared to show support for the proposed impact fees.

Discussion ensued regarding the committee "Citizens of Quality Education" being a recognized organization that Ms. Dillon chairs.

Mr. Wyckoff explained Council passing a resolution acknowledging their agreement to the impact fees would be in order and would prepare one for Council before the end of the day.

Mayor Theiss announced Zonta International and Literacy Volunteers would be collecting books in front of Bailey's Saturday, January 20th from 1:00 p.m. until 4:00 p.m.

First Reading on **AN ORDINANCE PERTAINING TO FEES FOR PROPRIETARY AND GENERAL SERVICES; CREATING CHAPTER 2, ARTICLE VI, FINANCE, DIVISION 2 FEES, SECTION 287, INTERIM PROPRIETARY AND GENERAL SERVICES FEES OF THE SANIBEL CODE OF ORDINANCES; PROVIDING FOR CODIFICATION; PROVIDING FOR CONFLICT AND SEVERANCE; AND PROVIDING AN EFFECTIVE DATE. (Requested by Vice Mayor Walsh)**
Mr. Sealover read the title of the ordinance and Council set the second reading and public hearing for Tuesday, February 06 at 9:30 a.m.

PUBLIC HEARING
SECOND READING AND PUBLIC HEARING of an **ORDINANCE OF THE CITY OF SANIBEL, FLORIDA ASSESSING A FEE ON TELECOMMUNICATIONS COMPANIES THAT OCCUPY MUNICIPAL RIGHTS-OF-WAY FOR TELECOMMUNICATIONS FACILITIES; PROVIDING FOR WHEN PAYMENTS ARE DUE; PROVIDING FOR INTEREST; PROVIDING FOR REVIEW OF RECORDS; PROVIDING A SAVINGS CLAUSE; PROVIDING FOR CODIFICATION; PROVIDING FOR CONFLICT AND SEVERANCE; AND PROVIDING AN EFFECTIVE DATE.**

Mr. Sealover read the title of the ordinance and explained a memo from the Florida League of Cities and indicates this was a model ordinance and is in response to legislation enacted in the last session that dealt with the subject of simplified telecommunications tax.

Ms. Renee Lynch, Finance Director explained the Florida Legislature was combining eight (8) different state and local taxes to come up with a simplified telecommunications services law. She continued to explain that although the law had been enacted it does not go into effect until October 01, 2001, and between January 2001 and September 30th if there any telecommunication companies that want to use City rights-of-way the City is unable to charge a franchise tax. In its stead the City is allowed to impose a fee. She further explained the ordinance would allow the assessment of those fees. October 1st this ordinance would be repealed and the adoption of a new ordinance would be necessary to impose the new state simplified tax.

Vice Mayor Walsh asked on page 2 Section 2 (1) 4th line from the bottom, he read.... ***"Included within the fee are all taxes, licenses, fees, in-kind contributions accepted pursuant to Section 337.401, Florida Statutes (2000) ad other impositions except ad valorem taxes..."*** he asked for an explanation.

Ms. Lynch replied there would be no charge on top of the gross receipts any taxes, licenses, fees; in-kind contributions on top of the 1% gross receipts.

Vice Mayor Walsh called Council's attention to page 4 paragraph C 5th line from the bottom, he read.... ***"where such records are maintained in the City"***, change to ***"records, if such records are not maintained in the City"***. He also called Council's attention to page 5 (ii) ***"provide the City with access to copies of the telecommunications company's records in the City within 55 miles of the City or by an electronic method satisfactory to the City."*** He asked if an audit could be done by the electronic method?

Ms. Lynch replied usually the audit services are contracted out and have to be satisfactory to the City. She continued to explain if the City found the method unsatisfactory that would be grounds to do an onsite inspection.

Vice Mayor Walsh asked if it was customary to impose a 5% penalty as mentioned in the second paragraph of page 5.

Ms. Lynch replied she had never drafted an ordinance with that language and explained the ordinance was a sample ordinance provided by the state and the language was included by the state.

Vice Mayor Walsh moved to adopt the ordinance as amended, seconded by Mayor Theiss. The motion was passed unanimously.

CITY OF SANIBEL

ORDINANCE NO. 01-01

AN ORDINANCE OF THE CITY OF SANIBEL, FLORIDA ASSESSING A FEE ON TELECOMMUNICATIONS COMPANIES THAT OCCUPY MUNICIPAL RIGHTS-OF-WAY FOR TELECOMMUNICATIONS FACILITIES; PROVIDING FOR WHEN PAYMENTS ARE DUE; PROVIDING FOR INTEREST; PROVIDING FOR REVIEW OF RECORDS; PROVIDING A SAVINGS CLAUSE; PROVIDING FOR CODIFICATION; PROVIDING FOR CONFLICT AND SEVERANCE; AND PROVIDING AN EFFECTIVE DATE.

WHEREAS, Section 337.401, Florida Statutes (2000), references fees or other consideration which municipalities may require from telecommunications companies to occupy municipal rights-of-way for telecommunications facilities; and

WHEREAS, it is the City's intent to establish fees for occupation of the City's rights-of-way for telecommunications facilities of telecommunications companies not otherwise paying a fee to the City for occupation of the City's rights-of-way; and

WHEREAS, it is the City's intention that any telecommunications company paying fees for the occupation of the City's rights-of-way for telecommunications facilities as of the effective date of this Ordinance shall continue to pay fees to the City as the company has been paying them and that any other telecommunication company occupying the City's rights-of-way for telecommunications facilities pay the fees for occupation set forth in this Ordinance.

NOW, THEREFORE, BE IT RESOLVED by the City Council of the City of Sanibel, Lee County, Florida:

Section 1. Purpose and application. The purpose of this Ordinance is to establish fees for occupation of the City's rights-of-way for telecommunications facilities of telecommunications companies not otherwise paying a fee to the City for occupation of the City's rights-of-way. Any telecommunications company fees for the occupation of the City's rights-of-way for

telecommunications facilities as of the effective date of this Ordinance shall continue to pay fees to the City as the company has been paying them.

The fees imposed pursuant to this Ordinance shall apply to all telecommunications companies occupying the City's rights-of-way for telecommunications facilities and not otherwise paying a fee to the City for occupation of the City's rights-of-way.

The fees imposed pursuant to this Ordinance are a fee and not a tax as specified in Section 337.401, Florida Statutes (2000); consequently, (1) the payments to be made pursuant to this Ordinance shall not be deemed to be in the nature of a tax; (2) such payments shall be in addition to any and all taxes of a general applicability; and (3) the fee specified herein is consideration for occupation of the City's rights-of-way, including all public easements, for the purpose of erecting, constructing and maintaining telecommunications systems.

Section 2. Fee for telecommunications company occupation of rights-of-way.

(a)

1) Any telecommunications company providing local telephone service, as defined in Section 203.012(3), Florida Statutes (2000), in the City and that is occupying municipal streets or rights-of-way within the corporate limits of the City with poles, wires or other fixtures shall pay to the City a fee in the amount of one percent (1%) of the gross receipts on recurring local service revenues for services provided within the corporate limits of the City by such telecommunications company. Included within the fee are all taxes, licenses, fees, in-kind contributions accepted pursuant to Section 337.401, Florida Statutes (2000), and other impositions except ad valorem taxes and amounts for assessments for special benefits, such as sidewalks, street pavings, and similar

improvements, and occupational license taxes levied or imposed by the City upon the telecommunications company.

2) In the event that a telecommunications company which provides telecommunications services defined as toll services in Section 203.012(7), Florida Statutes (2000), occupies the City's rights-of-way, the telecommunications company shall pay to the City annually Five Hundred Dollars ($500.00) per linear mile, which amount is prorated for any portion thereof, for any cable, fiber optic, or other pathway that makes physical use of the City's rights-of-way. Such annual fee shall be prorated to reflect the expiration date of this Ordinance and shall be payable annually, in advance. If a telecommunications company that is required to pay a fee pursuant to this subparagraph (a)(2) increases the amount of its facilities occupying the City's rights-of-way after such advance payment has been made, but prior to the expiration date of this Ordinance, the fees due for the additional facilities shall be prorated and paid in full at the time the facilities are installed in the City's rights-of-way.

The fee or other consideration imposed pursuant to this subsection (2) shall not apply in any manner to any telecommunications company which provides local telephone service as defined in Section 203.012(3), Florida Statutes (2000), for any services provided by such telecommunications company.

3) Telecommunications company, as used in this Ordinance, shall have the meaning set forth in Section 364.02(12), Florida Statutes (2000).

(b) The fees provided for in subsection (a) (1) shall be paid by the telecommunications company to the City in quarterly installments. The installment payment(s) shall be based upon such gross receipts on recurring local service revenues for the immediately preceding installment period or portion thereof after the effective date of this Ordinance, and shall be made within 30 calendar days following the end of the period. Past due payments or underpayments shall bear interest accrued from the last day of the quarter for which the payment was due. Interest shall be paid at the Florida statutory rate of interest on judgments as established by Section 55.03, Florida Statutes (2000). Payments shall include a statement as to how the fee amount was determined and the statement shall be certified by the telecommunication company's chief financial officer or other duly authorized representative of the company.

(c) If the City wishes to verify the payments due to the City under this section, the telecommunications company shall permit the City or a designated representative of the City, upon reasonable advance written notice, and during normal business hours at the location of the telecommunications company, or, if such records are not maintained in the City, at another location satisfactory to the City, or elsewhere pursuant to (i) or (ii) below, to review or audit the telecommunications company's records when such records are not maintained in the City, the telecommunications company shall either:

(i) pay all reasonable expenses, including travel, following the provisions of subsections 112.061 (6), (7) and (8), Florida Statutes (2000), to the City for the City to have a review or audit performed; or

(ii) provide the City with access to copies of the telecommunications company's records in the City or within 55 miles of the City or by an electronic method satisfactory to the City.

However, without the specific written consent of a telecommunications company's audit representative, no company records may be duplicated or taken from the telecommunications company's premises, and the City shall maintain the confidentiality of the information disclosed in these records and use the information solely for the purposes of verifying payments by the telecommunications company. No acceptance of payment shall be construed as a release or as an accord and satisfaction of any claim the City may have for sums due and payable under this Ordinance unless the City agrees in writing. In the event that the City, pursuant to final audit findings, determines that there exists a difference between the amount due to the City and the amount paid to the City, indicating an underpayment to the City, in excess of five percent (5%) of the amount due, such telecommunications company shall pay all reasonable costs, fees and expenses of the audit.

(d) This Ordinance is adopted consistent with the provisions of Section 337.401, Florida Statutes (2000), and other applicable provisions of law. This section shall not be construed as a waiver or limitation of the power of the City to prescribe and enforce reasonable rules and regulations pursuant to applicable provisions of law.

(e) If required by applicable City ordinances, codes or regulations, a telecommunications company shall be registered with the City and obtain all

permits that may be required by the City regarding occupation of the City's public rights-of-way for telecommunications facilities.

Section 3. Codification.

The City Manager is hereby authorized and directed to cause the amendments herein to be incorporated into the Sanibel Code of Ordinances.

Section 4. Conflict.

All ordinances and parts of ordinances in conflict herewith shall be and the same are hereby repealed. If any part of this ordinance conflicts with any other part, it shall be severed and the remainder shall have full force and effect and be liberally construed.

Section 5. Severance.

If any section, subsection, clause, or phrase of this ordinance is held to be invalid for any reason by a court of competent jurisdiction, it shall be deemed a separate, distinct, and independent provision, and such holding shall not affect the validity of the remaining portion of application hereof.

Section 4. Effective date.

This Ordinance shall take effect immediately upon adoption.

DULY PASSED AND ENACTED by the Council of the City of Sanibel, Lee County, Florida, this 16th day of January,2001.

AUTHENTICATION: _____ _____
Mayor City Clerk

APPROVED AS TO FORM: _____ _____
City Attorney Date

January 2, 2001 First Reading

January 4, 2001 Publication Date

January 16, 2001 Second Reading

Vote of Councilmembers:

Brown	aye
Harrity	aye
Theiss	aye
Walsh	aye
Workman	aye

Date filed with City Clerk: 01/18/01

ORDS-2TELE FEES RIGHTS OF WAY

Mr. Ackley stated the first reading of the fireworks ordinance would be on the May 15th agenda.

Discussion regarding the offering of three (3) lots on Library Way.
Mr. Ackley stated the former City Manager felt there was interest on Council regarding purchasing the property on Library Way.

Vice Mayor Walsh stated that this particular land was in the town center area, which was specifically designated for commercial development and he related there was no previous interest in purchasing the property and no money for such a purchase had been appropriated.

Councilmember Workman stated since the property was near the Civic Center/Senior Center, it could possibly be used for an expansion of that facility.

Mayor Theiss stated the current appraisal was $440,000 for the four (4) lots.

Discussion ensued regarding the acquisition of the four (4) lots.

Council consensus was to ask the City Manager to enter into negotiations for the purchase of the land.

Vice Mayor Walsh stated the corner parcel next to the four (4) lots was owned by Comcast and had been offered to the City at the price of $250,000 some months ago.

Report regarding deferment of State Revolving Loan payment on the sewer expansion project (Phase II B) (DEP contract # CS120835090) from August 2001, until December 15, 2001.
Mr. Ackley stated that the City had approach the Department of Environmental Protection (DEP) and requested and received permission to move the first payment from August to December 15, 2001 to give the City the opportunity to collect fees to make the first payment.

CITY ATTORNEY'S REPORT.
Report regarding the Recreation Center gym floor.
Mr. Wyckoff stated this was a $63,000 contract when the gym floor was initially installed. The day before the end of the contract the City made a claim because of de-bonding. He explained that there had been correspondence with the company and the company had also visited Sanibel. The company gave a warranty until September, at which time they would make a trip to see if the flooring needed to be replaced. The company had instructed employees regarding the need for repair of the flooring and the work would be completed at the company's direction.

Discussion ensued regarding safety and further deterioration.

Discussion regarding the proposed Verizon contract to install a communications tower.
Mr. Wyckoff reported that Verizon wireless approached the City regarding building a communications tower. He explained that the City had designated specific areas for communication towers and the Wulfert Road site was an approved site. He further stated the City would receive an income from the tower and the City would be able to use it for police relay.

Mr. Wyckoff stated staff would like direction from Council to hire someone to gather information regarding what income should be derived from communication towers.

Discussion ensued regarding income from proposed tower, hiring someone to look at proposed income and compliance requirements on the contractor.

Mr. Rogers, Planning Director stated the ordinance designates that a tower is allowed at the requested location on Wulfert Road. If this project were treated as a City exempted project, then it would come to Council and Council would make all determinations needed for a lease rather than going before the Planning Commission.

Vice Mayor Walsh stated if City project exemptions were eliminated, then the project would go before the Planning Commission as any other project.

Mr. Rogers replied that Council would need to amend the ordinance not exempting City projects.

Councilmember Workman made a motion, seconded by Councilman Harrity, to approve the rate study requested by the City Attorney.

The motion passed four to one with Councilman Brown voted in opposition of the motion, and Mayor Theiss, Vice Mayor Walsh, Councilman Harrity and Councilmember Workman voting for the motion.

COUNCILMEMBERS' REPORT.

Councilman Brown stated how comfortable he was with Mr. Ackley and the fine job he is doing. He also stated Council needed to think about a full-time City Manager.

Discussion ensued regarding looking at the City Manager process.

Public Comment.

Mike Gillespie spoke regarding negotiating for purchase of four (4) lots on Library Way.

Gloria Hannan spoke regarding other land available.

Hazel Schuler spoke regarding bike helmet use and bike safety.

There being no further business, the meeting was adjourned at 3:40 p.m.

Respectfully submitted by,

Pamela Smith, CMC
Exec. Asst. to CM/Deputy City Clerk

SANIBEL CITY COUNCIL MEETING
MAY 15, 2001

Mayor Theiss called the meeting to order at 9:00 a.m.

Members present: Mayor Theiss, Vice Mayor Walsh, Councilman Brown, Councilman Harrity and Councilmember Workman.

Invocation and Pledge of Allegiance.
Councilmember Workman gave the Invocation and led in the Pledge of Allegiance.

Proclamations, Announcements, Special Presentations.
Proclamation regarding Safe Boating Week May 19 to 25, 2001.
Mayor Theiss presented a Proclamation to the Power Squadron regarding Safe Boating Week May 19 to 25, 2001.

Proclamation regarding National Public Works Week May 20 to 26, 2001.
Mayor Theiss presented a Proclamation to Mr. Gates Castle, Public Works Director regarding National Public Works Week May 20 to 26, 2001.

Council interviewed Mr. Scott Johnson with Holland and Knight, LLP for possible land negotiations of the proposed purchase of the Mariner property.
Mr. Ackley introduced Mr. Scott Johnson from Holland and Knight, LLP.

Mr. Johnson gave a brief overview of his law firm and their experience.

Vice Mayor Walsh explained the City needing someone skilled in litigation and eminent domain. He explained that the Council was looking for a negotiator for a parcel of land that was both residential and commercial. He also explained the skills of the owner of the Mariner property, Ray Pavelka, as a negotiator and that part of the property was under contract by another entity subject to a variety of conditions. He also stated he would like to have a single attorney handling land acquisition negotiations for the City rather than a firm. Vice Mayor Walsh also mentioned there may be a potential conflict of interest in that Mr. Johnson's firm is representing Verizon, who is negotiating to put a telecommunications tower in Sanibel.

Mr. Johnson stated he viewed his firm as having three (3) attorneys that could handle the negotiations. He continued by saying that if hired by the City, he would be lead counsel; and he would bring with him, an appraisal attorney, Mr. David Ellis, and a real estate attorney Mr. Guy Neff. He also explained he had spoken to the attorney in his firm handling the Verizon interests and was told there were no current negotiations between the City of Sanibel and Verizon.

Councilman Brown reiterated Vice Mayor Walsh's comments as they apply to the type of property. He asked for the costs of the three (3) attorneys.

Mr. Johnson replied that cost would be billed on an hourly basis, but other arrangements could be made. He stated he felt his firm could bring value as it represented the City in land negotiations.

Councilman Harrity also reiterated past comments.

Councilmember Workman asked what the hourly rate would be for each attorney that Mr. Johnson mentioned, as well as the rate for any paralegal or associate? She asked about billing for travel and if Mr. Johnson's law firm had any experience with eminent domain for environmental preservation?

Mr. Johnson stated his rate would be $285 per hour; Mr. David Ellis' hourly rate would be $225 and Mr. Guy Neff's hourly fee would be $285. He also stated that the use of any paralegal would be $90 to $100 per hour and any associates' hourly rate would be $110 to $200 per hour.

He further stated any number of specialized issues could come up during negotiations and Holland and Knight, LLP have super specialization and could meet the needs of the City. He stated travel could be minimized with the use of e-mail and computers, but if the City required the firm in attendance frequently, then a travel fee could be negotiated. He explained he leads the practice in eminent domain for environmental preservation.

Mr. Wyckoff asked if the firm would be willing to give a better rate to a government entity?

Mr. Johnson replied his firm handled legal situations for many government entities, and Holland and Knight, LLP would be willing to talk about a discounted rate.

Mayor Theiss stated that the City's Land Use Plan (CLUP) is one of the strongest in the state. She wanted to make sure that the firm understood the importance of that plan and asked if his firm would be willing to follow the plan.

Mr. Johnson replied that the firm would make themselves aware of the Sanibel Plan and use the plan to the fullest extent in negotiations.

Council then thanked Mr. Johnson for attending and for his presentation.

Planning Department Report.

Mr. Rogers, Planning Director gave a brief overview of the Planning Department.

Council interviewed Mr. Pat Christenson with Ackerly and Simmerman for possible land negotiations of the proposed purchase of the Mariner property.

Mr. Christenson stated he was familiar with Sanibel and had spent time in the City on numerous occasions. He also stated he practices Orlando and has also acted as a developer in central Florida.

Councilman Brown explained the scope of the work as it applies to negotiations for a proposed purchase of land that is both residential and commercial. He asked the firm's hourly rate and how comfortable Mr. Christenson was with negotiations.

Mr. Christenson replied that his rate was $295 per hour and explained that he had much experience in negotiations. He related some of his experiences in land negotiations as they related to the environment.

Councilmember Workman asked if other members of Mr. Christenson's firm would be involved in negotiations; what the hourly rate would be; what other personnel would be involved and their rate, as well as any experience his firm had in eminent domain of environmental lands.

Mr. Christenson explained that his firm is large, with approximately three hundred sixty (360) attorneys in various locations throughout the state and they currently represent several governmental entities. He related that his firm had fee agreements with those entities at a reduced rate and a fee structure depending on years of service. He further explained that he would be doing the negotiations for the City and does not normally charge for travel, but it does depend on the rate structure. He further explained he had experience with eminent domain as it applies to public road purposes.

Vice Mayor Walsh asked if litigation and condemnation were warranted would other attorneys be involved and does his firm have any conflict of interest.

Mr. Christenson replied he usually does the negotiations and there are other attorneys that do condemnation. He stated his firm did not have any conflict of interest.

Councilmember Workman asked that a resolution be prepared for the October 16 Council meeting to re-establish the Five-Year Budget Projection Committee.

Vice Mayor Walsh asked Ms. Zimomra to look into the Sanctuary overlook and the Clam Bayou situation.

Discussion ensued regarding the overlook at the Sanctuary.

Public Comment:
Dick Downes spoke to Council regarding Australian Pines.

Council Comments:
Council decided to wait to make comments.

First Reading of an **ORDINANCE NO. 01-01 REPEALING THE ASSESSMENT OF FEES ON TELECOMMUNICATIONS COMPANIES THAT OCCUPY MUNICIPAL RIGHTS-OF-WAY FOR TELECOMMUNICATIONS FACILITIES AND PROVIDING AN EFFECTIVE DATE.**
Ms. Zimomra read the title of the ordinance.

Council set the Public Hearing for October 16, 2001 at 9:30 a. m.

CONSENT AGENDA:
Vice Mayor Walsh made a motion, seconded by Councilman Brown, to approve the Consent Agenda. Council approved by consensus.

(a) Consideration of Approval of Minutes – ~~September 04, 2001 Regular Meeting~~, ~~September 08 Budget Public Hearing~~, September 18, 2001 Regular Meeting and ~~September 18, 2001 Budget Public Hearing~~.

(b) Acceptance of Ms. Rhonda MacKenzie's resignation from the Wildlife Committee.

(c) Consideration of a **RESOLUTION NO. 01-18; DESIGNATING THE CITY MANAGER, FINANCE DIRECTOR, PLANNING DIRECTOR AND PUBLIC WORKS DIRECTOR TO ACT ON BEHALF OF THE CITY TO EXECUTE CORPORATE SIGNATURE CARDS AND CERTIFIED COPY OF CORPORATE RESOLUTIONS WITH BANK OF AMERICA, N. A. (FORMERLY NATIONSBANK OF FLORIDA, N. A.); AND PROVIDING AN EFFECTIVE DATE.**

OLD BUSINESS
HAZMAT presentation by Chief Rich Dickerson, Sanibel Fire Department.
Chief Rich Dickerson gave a HAZMAT presentation as it relates to a possible chlorine spill.

Vice Mayor Walsh asked how chlorine was used and what property chlorine came in when delivered.

Roger Blind, with Island Water Association replied that chlorine comes in powder, gas and liquid and Island Water uses it to clean up. He further stated that using liquid chlorine was not an option for use by Island Water Association.

- Budget cuts

Councilman Brown spoke to the island looking tired. He also suggested roping off the Mariner property with appropriate signage.

Discussion ensued regarding getting costs figures to voters before the referendum, storing effluent water in the old Island Water Association (IWA) water tank, the IWA property for sale and how blessed residents were to live on Sanibel.

Jack Samler spoke to Council regarding the IWA property.

Public Hearing:

Second Reading and Public Hearing of an ORDINANCE NO. 01-01 REPEALING THE ASSESSMENT OF FEES ON TELECOMMUNICATIONS COMPANIES THAT OCCUPY MUNICIPAL RIGHTS-OF-WAY FOR TELECOMMUNICATIONS FACILITIES AND PROVIDING AN EFFECTIVE DATE.

Ms. Zimomra read the title of the ordinance.

Mr. Wyckoff gave a brief history of changes in legislation as it applies to telecommunications.

Vice Mayor Walsh made a motion, seconded by Mayor Theiss, to adopt the ordinance.

Public Comment:
None.

The motion passed unanimously.

CONSENT AGENDA:

Ms. Smith asked that the minutes for September 08, 2001 budget public hearing be pulled.

Vice Mayor Walsh made a motion to adopt the Consent Agenda. He withdrew his motion.

Vice Mayor Walsh asked that the September 08, and September18 minutes, item (b), item (c) and item (d) be pulled from the Consent Agenda.

Councilmember Workman asked that the September 04 minutes be pulled.

(a) **Consideration of Approval of Minutes – September 04, 2001 Regular Meeting, ~~September 08 Budget Public Hearing,~~ September 18, 2001 Budget Public Hearing and October 02, 2001 Regular Meeting.**

Mr. Wyckoff asked that the word "moderate" be changed to "modern" in the first paragraph of page ten (10) of the September 04 minutes.

Vice Mayor Walsh made a motion to approve the amended September 04 minutes and the October 02 minutes.

Council agreed by consensus.

(b) **Consideration of a RESOLUTION RE-ESTABLISHING THE SANIBEL FIVE-YEAR BUDGET PROJECTION REVIEW**

CITY OF SANIBEL

ORDINANCE 01-__13

AN ORDINANCE REPEALING ORDINANCE NO. 01-01 REGARDING THE ASSESSMENT OF FEES ON TELECOMMUNICATIONS COMPANIES THAT OCCUPY MUNICIPAL RIGHTS-OF-WAY FOR TELECOMMUNICATIONS FACILITIES AND PROVIDING AN EFFECTIVE DATE.

WHEREAS, Ordinance No. 01-01 regarding the assessment of a fee for telecommunications companies occupying municipal rights-of-way was passed on January 16, 2001; and

WHEREAS, on July 3, 2001 the City of Sanibel passed Resolutions 01-49 and 01-50 in response to the State Legislature of Florida enacting the Communications Services Tax Simplification Law during its 2000 session; and

WHEREAS, Ordinance No. 01-01 is in direct conflict with Resolutions 01-49 and 01-50; and

WHEREAS, as a matter of housekeeping for the City's Codified Ordinances, it is prudent at this time to repeal Ordinance No. 01-01;

NOW, THEREFORE, BE IT ORDAINED by the Council for the City of Sanibel, Lee County, Florida:

SECTION 1. Ordinance No. 01-01 is hereby repealed for the foregoing reasons.

SECTION 2. Effective date. This Ordinance shall take effect immediately upon adoption.

DULY PASSED AND ENACTED by the Council of the City of Sanibel, Lee County, Florida, this 16th day of October 2001.

AUTHENTICATION:

Mayor

City Clerk

APPROVED AS TO FORM: _____ City Attorney 9/24/01 Date

First Reading: 100201
Publication Notice: 100401
Second Reading: 101601

Record of Council Members Vote:

Brown: aye
Harrity: aye
Theiss: aye
Walsh: aye
Workman: aye

Date Filed With City Clerk: October 17, 2001

JRC/COUNCIL/ORDS01-__
HOUSEKEEPING ORD 09-24-01

"Should the County be unable to obtained the permits for the projected improvements to the transportation facility, then in such event, the County will consult with the City concerning alternative designs and applications."

Council agreed.

Mr. Wyckoff spoke about a letter from Verizon regarding a proposed telecommunications tower at Wulfert. He stated that there was a settlement agreement between the Sanctuary Homeowners Association and the City regarding the use of the City's property in the Sanctuary, which states the property could be used for anything other than wastewater treatment facility. He further stated he had looked at the agreement sometime ago, but disagreed with the Sanctuary's interpretation of the agreement. He also stated he had talked with an attorney for Verizon, who was currently reviewing the language of the Sanctuary and City agreement and would decide to withdraw the application or not.

Council requested to see the Sanctuary and City agreement. Council also asked to be provided any and all documents that would be on the agenda for discussion.

Mr. Wyckoff also reported receiving a letter from Bob Pritt regarding a property bought by the Hetmanek family that was outside the resort-housing district, but used for short-term rentals prior to the City adopting the LDC. The previous owners, by resolution, were granted an exemption, which was to expire upon any sale or transfer of the property. He stated Mr. Pritt spoke about a variance, but no variance was involved in the situation.

Ms. Zimomra asked for clarity on the issue.

Mr. Wyckoff suggested allowing Mr. Pritt to bring the issue to Council.

Council decided to let it come before Council at a future meeting.

Mr. Wyckoff stated he accepted service on a complaint regarding Foxworthy's, but since the City's sewer lien was subordinate to the mortgage and is for a nominal amount, he suggested no action be taken, with which Council agreed.

Mr. Wyckoff spoke to a request from the Sandy Bend Homeowners' request to put an elevator in the condominium complex. He further stated there would be no way to build an elevator in the interior of the building and they are maxed out on setback and on coverage and development ratios for the footprint of the building. He explained looking into the ADA requirements and concluded that they do not apply. The Fair Housing Act says it the homeowners apply for relief under the LDC, the ADA requirements would be have to be reviewed. He stated there was no provision in the LDC, federal or state law that allows them amnesty regarding the process. Mr. Wyckoff also stated that Mr. Bruce Rogers, Planning Director had readied some language to be brought before the Planning Commission or Council that would affect a change and have a very limited change in the zoning so the situation could be addressed currently and in the future. He said the language would be limited to apply only to situations involving handicapped people.

Discussion ensued regarding the owners purchasing the building thirty years ago and are now handicapped, staff sponsored change to the LDC, amending the development permit, and the proper procedure was to go to the Planning Commission.

Ms. Zimomra asked for clarification and repeated her understanding of Council's decision and that was as follows:

To advise the requesting parties that the proper procedure would be to go to the Planning Commission with a request to amend the LDC and send them the proposed language it would take to change the LDC with the knowledge that the request would not be sponsored by staff.

Council passed their ballots to Mr. Wyckoff.

Mr. Wyckoff announced that Mr. Koughan was appointed to the Marine Advisory Committee.

COUNCILMEMBERS' REPORT.

Councilman Brown commented on receiving mail from different homeowners association regarding a proposed telecommunications tower.

Discussion ensued regarding previous public hearings on the telecommunication tower ordinance, meeting with associations, the City Manager, City Attorney and other interested parties, application regarding Verizon for a telecommunications tower complete and would come before Council for a decision and letters received from different homeowners associations.

Council requested that the City Manager ask Bruce Rogers, Planning Department Director to prepare a report regarding all past public hearings on telecommunications tower

Vice Mayor Walsh asked about the tennis program?

Ms. Zimomra reported that she and Helene Phillips, Recreation Director met with the tennis people regarding their complaint of not using the school tennis courts.

Vice Mayor Walsh also asked about a letter from Sanibel Bayous offering their sewer plant to the City.

Ms. Zimomra stated she and Mr Hefty, Utilities Director were making a site visit and making DEP aware of the date.

Mr. Wyckoff stated that if DEP has not required this utility to meet the standards, the City could force DEP to take actions against the utility.

Public Comment.

Herb Rubin spoke to Council regarding a trolley driver who stopped and helped a gopher tortoise across the road. He further spoke to his concerns regarding the vegetation committee working in pairs or more to tag property within the City.

Betty English spoke to Council regarding the charter amendment discussion.

There being further business, the meeting was adjourned at 5:35 p.m.

Respectfully submitted by,

Pamela Smith, CMC
Executive Asst. to City Manager/Deputy City Clerk

PLANNING DEPARTMENT STAFF REPORT
APRIL 11, 2002
Agenda Item 12 (b) – City Council Meeting April 16, 2002

Verizon Wireless request for City Council approval for construction of 149 feet monopole above ground level (AGL), to attach antennas to the monopole, construct equipment shelters to house the Base Transceiver Station (BTS), via cables to connect the BTS to the antennas and to fence in an area 50' X 50' to contain the equipment on the City-owned land at the Wulfert Road Wastewater Treatment Plant, at 2222 Wulfert Road. The request is being processed under the provision of Land Development Code Section 78-7, City exempted. The application was filed by MasTec North America, Inc. on behalf of Verizon Wireless Personal Communications, LP d.b.a. Verizon Wireless.

Verizon Wireless has applied to the City for approval to lease an area 50' X 50' on the site of the Wulfert Wastewater Treatment Plant. Verizon proposes to fence in this 50' X 50' leased area, to construct a monopole 149' above ground level (AGL), to attach antennas to the monopole, to construct equipment shelters to house the Base Transceiver Station (BTS) on the ground inside the fenced area, and to connect via cables the BTS to the antennas.

Attached to this report is a set of plans which depict the proposal. These plans are identified as Antenna Installation at Wulfert Road, WWTP, site number 68907, Kimley-Horn and Associates, Inc., January 2001, Sheet 1 of 6 (Rev. 3-5-02) Sheet 2 of 6, Sheet 3 of 6 (Rev. 3-5-02), Sheet 4 of 6, Sheet 5 of 6 (Rev. 4-9-01), Sheet 6 of 6 (Rev. 3-5-02).

The request before the City Council on April 16, 2002 deals only with the physical construction. The lease will be considered at a later Council meeting if the construction is approved.

Verizon currently has antennas mounted on the large tower located in Sanibel Gardens behind the Post Office. Verizon's purpose in filing this application is to improve service for its wireless telephone customers.

The Sanibel Wireless Telecommunications Master Plan adopted as LDC Article XVII, Division 2, Sections 126-1531 – 126-1539, contains the following paragraph:

> It is the City's policy to encourage any new, tall (up to 149' above ground level) antenna support structures to locate on the City-owned parcels identified as areas (1)-(4) in subsection (b) of this section. In order to encourage providers to look first to these City-owned areas, the City will establish an expedited permitting process and make the areas available at rates consistent with prevailing market conditions. If, for technological reasons, the "telecommunications tolerant" areas of the city are

unacceptable to a service provider, then an alternate permitting process should be followed."

The Wulfert Road Wastewater Treatment Plant site at 2222 Wulfert Road is one of the city-owned areas referred to in the above paragraph.

Land Development Code Section 126-1512. Purpose and Intent, states, in part -

> This article is intended to bring the city's land development code into compliance with the Telecommunications Act of 1996, which was codified as Public Law 104-104, and any other lawful regulation passed pursuant to and in compliance with the act. It is intended to provide city residents, businesses, visitors and public service agencies with access to the latest telecommunications services and technology within the context of and in a manner consistent with the Sanibel Plan.

In adopting LDC Article XVII, Telecommunications Devices, the City Council found this article consistent with the Sanibel Plan.

Land Development Code Section 126-1587, Telecommunications Devices as Principal uses, states:

> **It is the city's policy to encourage use of designated city-owned land and facilities for the siting and location of telecommunications facilities as principal uses, especially when the height exceeds plus 45 feet zero inches NGVD.**

A monopole to a maximum height of 149 feet, above ground level (AGL) is permitted as a primary intended use at the Wulfert Road Wastewater Treatment Plant site.

Land Development Code Section 126-1560 (d), states that, "An application to construct a telecommunication device on city-owned parcels shall be processed under the provisions of Section 78-7 pertaining to the city's exemption from specific requirements of the Land Development Code."

Land Development Code Section 78-7 reads:

> Sec. 78-7. City exempted.
>
> The city is exempted from the specific requirements of this land development code. Development regulations, conditions, and limitations for any development initiated by the city shall be determined, on a case-by-case basis, by the city council, but no such development shall be inconsistent with the Sanibel Plan. (Ord. No. 85-26, § 1(I.A.7), 11-27-1985)

The Verizon Wireless application was reviewed for compliance with LDC Article XVII. Telecommunications Devices, by the city's consultant, Kurtis and Associates, P.C., and was found to be in compliance with the standards and requirements of that Article.

The Planning Department's review of the Verizon Wireless application concluded it substantially complies with LDC standards and requirements. The only reason for using the word "substantially" to qualify compliance is because Verizon has not completed final, engineered construction plans. These plans will be completed and signed and sealed by their engineer after City Council approval and prior to the building permit being issued.

Not everything in the Verizon application has been attached to this report because of the volume of the material in the application. A separate file has been set up containing the complete application and this file is available to the Council and the public.

It is the applicant's responsibility to demonstrate to the City Council at the Public Hearing that the Verizon Wireless application complies with the standards and requirements set out in the Sanibel Plan and Land Development Code.

Verizon Wireless should demonstrate to the satisfaction of the City Council that the following specific Land Development Code requirements have been satisfied prior to Council approval.

Sec. 126-1561. Application requirements.

(10) A statement of intent that collocators will be permitted in cases where devices are required or proposed to accommodate more than one provider. The positions of anticipated collocator antennas on the mount and the space provided for collocator equipment shelters shall be shown on all site plans and elevations.

(11) Certification by the applicant that, as proposed, the device complies with Federal Communications Commission guidelines for radio frequency emissions. The city reserves the right to require a radio frequency emissions analysis of the proposed device which may include measurement of existing ambient emissions and projected project and cumulative emissions to demonstrate compliance on a cumulative basis with applicable Federal Communications Commission guidelines.

(12) Certification that, as proposed, the device should not cause harmful electrical interference with any city-operated radio frequency devices in existence at the time of the application, and certification that the applicant acknowledges their obligation to take all steps necessary to resolve any interference that actually occurs.

(13) Certification as to compliance with or exemption from any federal or state regulations applicable to the siting.

unacceptable to a service provider, then an alternate permitting process should be followed."

The Wulfert Road Wastewater Treatment Plant site at 2222 Wulfert Road is one of the city-owned areas referred to in the above paragraph.

Land Development Code Section 126-1512. Purpose and Intent, states, in part -

> This article is intended to bring the city's land development code into compliance with the Telecommunications Act of 1996, which was codified as Public Law 104-104, and any other lawful regulation passed pursuant to and in compliance with the act. It is intended to provide city residents, businesses, visitors and public service agencies with access to the latest telecommunications services and technology within the context of and in a manner consistent with the Sanibel Plan.

In adopting LDC Article XVII, Telecommunications Devices, the City Council found this article consistent with the Sanibel Plan.

Land Development Code Section 126-1587, Telecommunications Devices as Principal uses, states:

> **It is the city's policy to encourage use of designated city-owned land and facilities for the siting and location of telecommunications facilities as principal uses, especially when the height exceeds plus 45 feet zero inches NGVD.**

A monopole to a maximum height of 149 feet, above ground level (AGL) is permitted as a primary intended use at the Wulfert Road Wastewater Treatment Plant site.

Land Development Code Section 126-1560 (d), states that, "An application to construct a telecommunication device on city-owned parcels shall be processed under the provisions of Section 78-7 pertaining to the city's exemption from specific requirements of the Land Development Code."

Land Development Code Section 78-7 reads:

> Sec. 78-7. City exempted.
>
> The city is exempted from the specific requirements of this land development code. Development regulations, conditions, and limitations for any development initiated by the city shall be determined, on a case-by-case basis, by the city council, but no such development shall be inconsistent with the Sanibel Plan. (Ord. No. 85-26, § 1(I.A.7), 11-27-1985)

(14) Certification that the proposed mount complies with regulations administered by the FAA, FCC and any state reviewing authority, or that the mount is exempt from those regulations.

(15) Description of security measures to be taken in the operation of the device.

(19) Applicant shall identify all prospective users of the support structure, not identified above, for which it has either entered into negotiations or agreed to provide space on the support structure. Applicant shall identify the proposed mounting location for each antenna to be utilized by each such prospective user and identify any future capacity for which applicant has been requested to reserve future loading capacity.

(20) Applicant shall identify all additional capacity which would be available for future collocation use at the proposed structure beyond the collocation users identified in subsections (17)--(19) of this section.

26) Applicant shall identify whether back-up power will be utilized.

(27) If back-up battery power is used, proponent shall certify that only sealed type batteries will be utilized.

(28) If a generator will be used at this site, provide manufacturer, model, specifications, type of fuel, type of fuel storage, and storage tank location and size, and set forth the length of time for which the generation facilities, as proposed, will be capable of providing backup power for all initial and future proposed collocation users at the site. Any collocation users not to be powered by the back-up generation facilities shall be expressly identified as such in the filing. The applicant shall provide documentation sufficient to demonstrate projected noise levels will comply with the requirements set forth in section 30-61 et seq.

(31) Provide a copy of the FCC authorization under which the proposed facilities, would be operated and provide a brief description of the services to be offered by the proposed facilities including a listing of the specific frequencies which are currently operating and which the proponent proposes to add to this facility.

(34) Provide a copy of the FAA clearance for the structure. The FAA clearance shall include clearance for both the height of the structure as well as the frequencies which are proposed to be added to the structure.

(37) Identify whether any portion of the proposal would be an action requiring an environmental impact statement pursuant to 47 CFR 1.1305, or requiring an environmental assessment pursuant to 47 CFR 1.1307, and, if so, include a copy of the application for FCC approval.

(38) The proponent shall include a certification by a radio frequency engineer, technically qualified and competent to address the issues, that the proposed facilities would be in compliance with all RF exposure requirements as required by the FCC. This certification shall identify all existing and proposed operations at the radio site (by frequency, antenna mounting location and effective radiated power). The proponent shall submit a certification by the owner of the structure certifying that all of the facilities in operation and proposed for the site are specifically identified in the foregoing engineer's certification.

(39) Provide FCC type-acceptance number for each proposed transmitter.

(40) The applicant shall include a certification of a radio frequency engineer, qualified to practice before the FCC, that the proposed facilities are not expected to pose any potential interference problem to over-the-air reception devices or other common consumer electronic devices of local residents in proximity to the structure. The proponent shall include a certification by a principal of the proponent that any such actual interference resulting from the operation of the proposed facilities will be resolved by the proponent and, if it cannot be resolved, that the proponent will promptly cease operation of the interfering facilities until such interference can be resolved.

(43) Include predicted received signal levels (in dBm) in 5dB increments with the lowest predicted level no less than the proposed system's portable threshold values and identify what each of these service levels mean in laymen's terms (i.e., indoor portable coverage, in-car portable coverage, outdoor portable coverage).

(44) Identify on the map the proposed site, and all facilities within or providing service within the city limits.

(45) The application shall provide a detailed listing of all equipment to be placed at the site or on the existing structure. The application shall include an acknowledgment by a principal of the proponent that any permit issued as a result of the subject filing is expressly limited to the equipment specifically identified therein and that, other than for the maintenance, repair or replacement of such equipment with the same manufacturer and model number, no other equipment shall be added to the site without the receipt of an additional permit for the addition of any such equipment. Such additional permit shall only be issued in response to an additional filing which contains all information required in this section.

(46) If the proposed facility is intended to provide communications to the public or to emergency personnel, the filing shall include information regarding the ability of the proposed facilities to maintain operation during times of emergency. Specific reference shall be made to any emergency 911 or E 911 call routing capabilities.

(47) Provide manufacturer, model and specifications (mechanical and electrical) of each building or cabinet being proposed herein and describe the purpose of each.

(48) If HVAC is to be used, then information shall be provided with respect to the noise level during operation (specified in decibels) which will be heard at the nearest property boundary.

(49) In addition to the proposed facility, the proponent shall identify how many additional sites it foresees needing in one, three, five and ten years. With respect to any facilities which are envisioned within the next 24 months, the proponent shall set forth whether the construction of the facilities as proposed in this filing will increase or decrease the likelihood that those additional facilities can also be accommodated on other existing structures. With respect to any facilities which the proponent intends to seek a permit for within 12 months of the filing of the instant application, the proponent shall specifically identify the location of such additional structure and shall identify whether that additional site is an existing structure or, if not an existing structure, how the proposed collocation was designed so as to minimize the number and size of any new structures to be proposed.

(51) Where required by the National Environmental Policy Act of 1969 (NEPA), or 47 CFR 1.1305 or 47 CFR 1.1307, applicants shall submit a copy of the environmental impact statement or environmental assessment, as appropriate, prepared for the Federal Communications Commission, including a demonstration of compliance with FCC RF exposure guidelines.

(53) As part of its application, the carrier shall submit its design criteria, in terms of received signal strength (stated in dBm), for providing coverage from the proposed site. Carrier shall also include a map depicting the predicted coverage (in terms of received signal strength) for the facilities as proposed.

(54) Where a carrier presently operates one or more transmitting sites in the city, as part of any application for additional transmitting sites, the carrier shall submit a map showing how the proposed cell site is expected to enhance coverage in the city. If the proposed transmitting facility is being proposed to enhance coverage within an area previously depicted by carrier (in conjunction with an earlier application) as receiving adequate signal strength, based upon carrier's previously submitted design criteria, as part of any such application for an additional transmitting site, carrier shall include actual field measurements depicting all areas where actual coverage is below that which was previously predicted. Carrier shall also include a showing as to what steps it has taken in an effort to enhance coverage from any existing sites and why the addition of another transmitting facility is the only feasible way to provide the requisite coverage. Carrier shall include an explanation for the variance between the previously predicted coverage and the measured signal strength, as well as an affirmative demonstration as to way the same variance between predicted and actual coverage from the proposed facilities is not expected to be repeated.

(55) As part of any showing for a new or additional transmitting site, the proponent shall include a demonstration of why it cannot, through the use of antenna combiners or other filters, utilize any existing antennas on an existing transmitting site to provide substantially the same coverage.

Before a lease is entered into and a building permit is issued for the construction of anything on the city-owned land, the applicant shall furnish the following information:

Sec 126-1561

(5) Front, side and rear elevations of the telecommunications device indicating the color and finish, visual screens and enclosures, buffer treatments and lighting, including:

a. Specifications for support structure and mount height and design and including a plan or drawing of cross sections of the structure.

c. Construction plans showing the method of construction and installation and the manufacturer's specifications.

d. Description of the mount's maximum capacity, including the number of antennas and their mounting configurations and positions that it can accommodate for collocation, and taking into consideration radio frequency interference, mast height, and other characteristics, as well as options to overcome any problems that these considerations may pose to service delivery.

(6) Certification by a registered professional engineer, licensed by or permitted to provide certifications in the state, that the device is designed and constructed:

a. To meet the construction standards found in this article;

(16) Description of liability insurance or binding for the device.

(21) Applicant shall submit a full set of engineering drawings, which drawings shall be stamped by a professional engineer licensed in the state, specifying the dimensions of all structural members and mounting facilities to be incorporated into the support structure for all loading identified subsections (17)--(20) of this section, and shall expressly identify each such antenna as having been incorporated into the support structure design. These drawings shall also include the foundation design for the proposed structure. In addition, the PE shall certify compliance with both the then-current EIA/TIA 222 standard as well as the applicable provisions of the city's building code, which includes a 120-mph wind load, as defined by the American Society of Civil Engineers, Publication No. 7 of 1993 (ASCE 7-93), and the 1997 Standard Building Code, or its then-current replacement. Where conflicting standards are set forth in those documents, the more stringent standard shall be utilized in the design.

(22) Applicant shall identify any party or parties which have requested collocation on the facilities but for whom capacity is not designed into the structure as set forth in this section, and shall include a brief explanation as to why that collocation has been disallowed or is not being further considered.

(24) Applicant shall include elevation drawings for all equipment shelters and cabinets proposed for the site. Applicant shall set forth the environmental ratings for all equipment cabinets and specify whether the cabinets meet or exceed Bellcore Specification TR-TSY-000487. For equipment buildings, applicant shall identify all materials used for the shell of the building and set forth the wind loading specifications. Applicant shall specify the exterior finishes and materials for all proposed equipment cabinets and shelters.

Approval of the application should be conditioned upon the following:

1. Relocate the existing light pole to city-approved location outside the fenced-in lease area at Verizon's expense.

2. Paint the tower and <u>all</u> <u>attachments</u> thereto the following color: Reflection TWT SW2122, Sherwin Williams.

3. The monopole shall not be lighted and shall not have any lights attached to it.

4. All electrical equipment and equipment cabinets shall be elevated to or above the base flood elevation of A-9, Elevation + 8 feet, NGVD.

The following standards and requirements shall be adhered to in the construction and development of the facilities on the city-owned lands:

Section 126-1589

(3) Lighting. Artificial lighting shall be limited to:

b. Security lighting for any equipment, buildings, shelters or other on-the-ground ancillary equipment and structures, shall be compliant with the outdoor lighting standards of this land development code. Such lighting shall be manually operated and used only during night maintenance checks or in emergencies.

(4) Signage.

a. No signage shall be allowed on any telecommunications facility except as required for public safety purposes, or by the FCC or FAA.

b. No telecommunications device shall have advertising on it or contain any sign or insignia for the purpose of advertising.

c. The display of required Federal Communications Commission tower registration information is permitted, using the smallest sign face which meets FCC requirements.

(5) Secure design and safety.

a. All parts of telecommunications facilities shall maintain clearances from any electricity lines and equipment as required by the National Electrical Safety Code (NESC).

b. Telecommunications equipment shelters shall be of vandal-resistant design or shall be provided with a suitable security barrier.

c. A controlled access enclosure is required around the base of the mount and equipment shelters of all telecommunications devices as principal uses.

d. Access to the telecommunications device as a principal use and ground equipment shall be only through a lockable entrance.

(6) Noise. All sound-emitting devices shall comply with the requirements set forth in section 30-61 et seq., pertaining to noise.

The monopole, including surmounting appurtenances, shall not exceed a height of 149 feet, AGL.

Sec. 126-1590

(b) Foundations for ground-mounted, structure-mounted and utility-pole-mounted telecommunications devices shall not disturb, break or penetrate the aquiclude or clay layer at the bottom of the freshwater lens, permit saltwater intrusion or otherwise endanger the integrity of the freshwater lens. If it is necessary to drive pilings below the level of the aquiclude, such penetration shall be sealed according to the best technology available to avoid saltwater intrusion.

(e) All telecommunications devices shall be subject to periodic reinspections.

(i) All telecommunications devices shall meet all manufacturer's specifications. Any mount or accessory equipment shall be of noncombustible and corrosive-resistant material. Miscellaneous hardware, such as brackets, turnbuckles, clips and similar equipment subject to rust or corrosion shall be protected with a zinc coating either by galvanizing or sheradizing process after forming, or by use of stainless steel fittings, or by equivalent protective processes. These finishes are selected to guard against corrosion and to protect the elements against electrolytic action due to the use of adjoining dissimilar metals.

(k) All telecommunications devices shall be maintained in good condition and in accordance with all the standards of this section. No additions, changes or modifications shall be made to a device unless the addition, change or modification is in conformity with the standards of this section and the land development code. All required permits must also be obtained for additions, changes or modifications.

(l) Mounts shall be the narrowest feasible at the horizontal measurement to provide the required stability and loading.

(m) Permanent platforms, exclusive of antennas, that serve to increase the visibility of the telecommunications device from off-site are not permitted.

(n) All mounts, antennas and surmounting appurtenances, including attachments thereto, shall be of a type, design, color and texture which are the least visually obtrusive structures possible, while accomplishing their intended purpose.

(p) At all times each facility shall be insured for liability in an amount of not less than $5,000,000.00. For each facility, the applicant or owner shall provide to the city a bond or other security in an amount sufficient to ensure that the facility is returned to its natural state upon abandonment.

All structures including the monopole and all attachments thereto shall be designed and constructed to meet the following codes and standards:

> The Florida Building Code, Section 1606, Wind Loads, Exposure C, 130 MPH basic wind speed.
>
> FAA Advisory Circular #AC70.7460-1H
>
> Electronics Industries Association (EIA) Standards, the then-current revision of (EIA)/TIA 222

If there is any conflict among these three requirements, the more stringent shall control.

Sec 126-1593

(c) Ground-mounted telecommunications facilities shall be accessible by service vehicles.

Sec 126-1597

(b) (2) All new ground-mounted facilities shall be designed and constructed to accommodate shared use when technically feasible and practical. The owner of the telecommunications mount shall, as an ongoing condition of the required development permit, respond to requests for other service providers, in a timely manner, as to the availability of space on the telecommunications mount.

(b) (3) The design and construction of telecommunications support structures for collocation shall assume that each additional service provider will have loading requirements comparable to the original proponent. The owner of the device must provide reasonable leasing opportunities to other service providers to use the device.

(b) (4) A reasonable pro rata charge may be made for shared use, or rental rates consistent with prevailing market conditions may be charged, consistent with an appropriate sharing of construction, financing and maintenance costs. Fees may also be charged for any structural or radio frequency changes necessitated by such shared use. Such sharing shall be a condition of approval, if approval is granted.

a. The applicant shall describe what range of charges are reasonably expected to be assessed against shared users.

b. The applicant shall base charges on generally accepted accounting principles and shall explain the elements included in the charge.

(b) (5) The applicant shall quantify the additional mount capacity proposed, including the number and types of antenna. The applicant shall also describe any limitations on the ability of the mount to accommodate other users, such as radio frequency interference, mast height, frequency or other characteristics.

(Ord. No. 99-07, § 4(I.E.32.f(7)), 11-2-1999)

[Verizon engineer shall certify the number of additional mounts the monopole can carry.]

Sec 126-1598

(a) All support structures and attachments thereto shall present the slimmest profile possible, as seen from public views, by utilizing facilities/devices and construction materials and techniques with the smallest feasible diameter, diagonal or horizontal measurement.

(e) To the greatest feasible extent, ground-mounted telecommunications facilities shall be sited where they are concealed from public view by other objects such as trees or buildings.

(f) In keeping with the Sanibel Plan, including the vision statement, and in efforts to minimize visual impact, carriers shall propose the slimmest profile possible for their transmitting facilities. Carriers shall be required to utilize cross-polarized antennas for purposes of diversity, as opposed to the use of additional antennas for space diversity, unless a carrier includes an engineering demonstration showing that cross-polarized antennas would not provide adequate coverage from the proposed transmitting location. Such showing shall also include a map which depicts the precise areas where coverage would not be satisfactory from a cross-polarized antenna configuration, as compared to a space diversity configuration.

(g) To the greatest feasible extent, equipment shelters associated with ground-mounted or utility-pole-mounted telecommunications facilities shall be concealed from public view or shall be buffered to be compatible with surrounding land uses.

(h) The telecommunications device, supporting structures and accessory equipment:

2) Shall not be made of materials which are bright, shiny, garish or highly reflective of light;
4) Shall be screened by the use of landscaping or architectural features which harmonize with the elements and characteristics of the parcel on which it is located and adjacent properties.

(i) Mounts, antennas, towers, equipment shelters, support structures, storage facilities, operations buildings and auxiliary structures shall be screened from public view to the greatest extent feasible

A vegetation buffer shall be installed or augmented to comply with this subsection as determined by the City Manager.

Sec 126-1599

(b) Telecommunications devices as principal uses.

(1) Prior to receiving a completion certificate, the applicant shall certify in writing that the telecommunications device complies with all current Federal Communications Commission regulations for nonionizing electromagnetic radiation and radio frequency emission levels.

(2) No telecommunications device shall transmit signal strengths in excess of those allowed under the then-current federal regulations.

(3) The applicant shall certify in writing that the device complies with all current Federal Aviation Administration regulations and with Southwest Florida International Airport Authority requirements.

(4) Documentation must be submitted that the applicant possesses any required licenses required by federal, state, or local agencies to operate, own, or install such a device.

The applicant shall furnish to the City the following certifications prior to the issuance of a completion certificate or a Certificate of Occupancy.

Land Development Code Section 126-1563 (1), (2), (3) and (4)

Sec. 126-1563. Applicant certifications.

Prior to the issuance of the completion certificate required by section 82-362, or a certificate of occupancy, the applicant for a telecommunications device, as a principal use, shall furnish the city with the following certifications:

(1) Radio frequency (RF) emissions. Each applicant shall certify that it is in compliance with the Federal Communications Commission's RF emissions rules as they relate to human exposure. Such certificate shall be furnished with respect to both new devices and each proposed addition to a radio site. The certification shall be furnished by an individual with demonstrated competence in the field of RF emissions.

(2) Environmental rules. Each applicant shall certify that it is in compliance with the FCC's environmental rules, as well as the Florida Department of Environmental Protection Agency requirements. The certification shall be furnished by an individual with demonstrated competence in the field of FCC's environmental rules.

(3) FCC/FAA marking and lighting requirements. Each applicant shall certify that the construction and operation of its proposed device is, and will remain, in compliance with part 17 of the FCC's rules and satisfies the FAA's rules and regulations. The certification shall be furnished by an individual with demonstrated competence in the field of FCC/FAA marking and lighting requirements.

(4) Certification of compliance with all applicable standards and codes. The applicant shall certify that the proposed use, engineering design, manufacture, construction and safety are in accordance with the latest revision of industry codes, design guides, and applicable standards in effect at the time of issuance of the permit. In addition, the applicant shall certify that all applicable federal, state, and local codes and standards have been observed, and that the devices have been installed in accordance with the approved plans.

The following LDC subsections shall apply to this application:

Sec. 126-1564. Assignment and subleasing of telecommunications devices as principal uses.

(a) Telecommunications devices, sites or permits may not be sold, transferred or assigned until the assignee obtains approval from the city, except in conjunction with the sale or transfer of the underlying FCC license, provided written notice is given to the city within 30 days of consummating such transaction. When prior city approval is required, such city approval shall be granted upon determination by the assignee that it has the capability of complying with the ongoing obligations of this land development code.

(b) Sublease of a telecommunications device shall not be entered into by any provider until the sublessee has obtained a development permit from the city for the telecommunications device, or the sublease is conditioned on sublessees receipt of a development permit, prior to commencing any construction.

(c) Potential providers may not claim that a permit should be issued by the city for an assigned or subleased telecommunications device on the basis of any expense incurred in relation to the device.

Sec 126-1565 Inspection

The city may inspect any telecommunications device that is a principal use to ensure that the mount and its antennas and equipment shelters are being maintained in compliance with the standards of this section. Upon a determination that a telecommunication device does not comply with the standards of this section, or constitutes a danger to persons or property, the owner of the device shall have 30 days to bring the device into compliance.

Sec 126-1566 Abandonment

(a) If the use of any telecommunication device, or any portion of a telecommunication device, has been discontinued for a period of 180 consecutive days, the telecommunication device shall be deemed to be abandoned.

(b) Upon a determination of abandonment, the owner or operator of the telecommunications device shall have 90 days within which to:

(c) The owner of the abandoned telecommunications device and the owner of the property where the device is located shall be under the duty to remove the device and restore the property to its preexisting condition. If it is not removed within 60 days after notice from the city requiring removal, the City may remove it and restore the property to its preexisting condition. The cost of removal and site restoration shall constitute a lien upon the property.

(d) Delay by the city in taking action shall not in any way waive the city's right to take action.

Attachments

1. Set of plans, 6 sheets, prepared by Kimley-Horn showing Verizon Wireless proposal.

2. Plan for future expansion of Wulfert Wastewater Treatment Plant prepared for the City showing proposed area for Verizon Wireless construction.

Acceptance of a resignation from Vegetation Committee member Tom Hansen.
Council by consensus accepted Mr. Hansen's resignation and Mayor Theiss that Mr. Wyckoff speak to the letter during the City Attorney's report.

Council recessed for lunch at 12:30 p.m.

Council reconvened at 2:00 p.m.

Council decided to discuss (a) under "New Business"
Mayor Theiss explained to the audience that there would be no applause or booing. She further explained that the policy for public comment would last five minutes and after everyone had the opportunity to speak anyone could speak a second time.

Discussion ensued regarding the quasi-judicial procedures.

RESOLUTION NO 02-40 REQUESTING THAT THE SANIBEL LIBRARY ADDITION BE PROCESSED AS A CITY-EXEMPTED PROJECT PURSUANT TO LDC SECTION 78-7; AND PROVIDING AN EFECTIVE DATE.
Ms. Zimomra read the title of Resolution 02-40.
Pat Allen, Executive Director of the Sanibel Library and Jim Hooper, President of the Sanibel Library Board introduced themselves.

Mr. Hooper stated that the Library Board was requesting that Council under it's authority to exempt the Library expansion project. He gave a brief history of previous construction, as well as this project and the reason for expansion.

Discussion ensued regarding the expansion and trading of land on Library Way with the City.

Public Comment:
None.

Vice Mayor Walsh made a motion, seconded by Councilman Brown to adopt Resolution 02-40.

The motion passed unanimously.

Verizon Wireless request for City Council approval for construction of 149 feet monopole above ground level (AGL), to attach antennas to the monopole, construct equipment shelters to house the Base Transceiver Station (BTS), via cables to connect the BTS to the antennas and to fence in an area 50' x 50'to contain the equipment on the City-owned land at the Wulfert Road Wastewater Treatment Plant, at 2222 Wulfert Road. The request is being processed under the provision of Land Development Code Section 78-7, City exempted. MasTec North America, Inc. on behalf of Verizon Wireless Personal Communications, LP d.b.a. Verizon Wireless, filed the application.

Vice Mayor Walsh asked for clarification of Section 78-7 of the Code.

Mr. Wyckoff read Section 78-7 in to the record as follows:

"City exempted:"
"The City is exempted from specific requirements of the Land Development Code. Development regulations, conditions, and limitations for any development initiated by the City shall be determined on a case by case basis by the City Council, but no such development shall be inconsistent with the Sanibel Plan."

Vice Mayor Walsh asked what the provision was for the installation of monopoles or other type structures for cell telephones.

Mr. Wyckoff replied that was in Section 126 of the LDC and deferred to Bruce Rogers, Planning Director to the procedure being follow for application by Verizon.

Mr. Rogers stated the LDC provides that short form permits, which are issued by staff, was for certain towers, but no all. Qualifying towers are permitted to a maximum height of forty-five, sixty and eighty-five feet or if someone were putting an antenna on an existing tower. All have a list of locations and specifications on privately owned land. He explained that the Verizon requested required a long permit that goes to City Council if the tower was proposed to be constructed on City-owned land, defined in the Code as being telecommunications tolerate, and a monopole proposed for Wulfert Road up to one hundred and forty-nine feet as it were a City-exempt project.

Mr. Wyckoff stated that Mr. Rogers had been referring to LDC Section 26-1558, entitled "Short-form Development Permit," and Section 126-1559, entitles "Long-form Development Permit." He explained that treatment as City-exempt was dictated by the code, because of where it is located, instead pursuant to the LDC, the application would be treated as exempt by virtue of location.

Discussion ensued regarding if the quasi-judicial hearing had or had not began, legal issues that mandated the application process to come before Council, no provision in the Code that would lend this procedure to the Planning Commission.

Bruce Rogers read in to the record LDC Section 126-1560 subparagraph (d) as follows: "An application to construct a telecommunication device on City-owned parcels shall be processed under the provisions of Section 78-7 pertaining to the City's exemption from specific requirements of the Land Development Code."

Mr. Wyckoff explained that during this hearing Council would make a determination of consistency with the Sanibel Plan and other requirements of the telecommunications ordinance.

Council recessed at 2:25 p.m.

The following persons spoke for Verizon:

Jerry Knight, Esquire of Holland and Knight representing Verizon. He passed out Verizon binder to Council, City Clerk and City Attorney. He stated the reason for the hearing was pursuant to an application for Verizon Wireless to install antenna on a support structure (telecommunications tower) on the Wulfert Road Wastewater Treatment Plant. He explained that if approved by the City Council, the tower would provide enhanced service to the City, particularly the west end of the island. He mentioned that Josephine Conde, Real Estate Manager for Verizon and Wymart Tobargo, Verizon's Radio Frequency Engineer and Jason Laske, Mas Tec Wireless Services a consultant to Verizon processing applications for new antennas. He explained the contents of the binder given to Council.

Mr. Knight explained that Verizon started the application process approximately two years ago, with the actual application submitted last year. He explained the following:

- Steps it took to find a site
- Verizon could use existing or new towers
- City staff finding that the application complies with the LDC
- Curtis and Associates (City consultant) letter stated that Verizon proposal as modified complied with the radio frequency (RF) requirements of City ordinance
- Ordinance 99-07 identifying telecommunication tower tolerant locations, City policy to encourage any new telecommunications tower up to one-hundred forty-nine feet above ground level located on City-owned land (shown on City maps) and could be a primary site
- Ordinance 99-07 supersedes any conflict with other regulations in the code with respect to telecommunication devices (towers/antenna)
- Telecommunication towers buffered by vegetation or distance as identified in the Code, nearest residence was over 900 to 1,000 feet away, site would be buffered to any adjacent residential area by existing or future vegetation

Discussion ensued regarding the height of the tower and the number of antennas on the tower.

Wymart Tabargo, RF Engineer for Verizon explained the following:

- Choosing the Wulfert Road site would enhance existing service to the island
- Increase capacity to the area
- Meeting FCC standards with installation
- Reducing the number of antennas from six to two
- Other antennas would be allowed
- Maximum height would be one-hundred forty-nine feet including area light

Mr. Jason Laske, MasTec Wireless Services explained the following as his company submitted application for Verizon Wireless:

- Existing structures, which include:
  Verizon existing tower – to far east of the intended area and to close to the existing site
  Island Water -
  Sanibel Elementary School - to far east of search ring
  J. N. Ding Darling National Wildlife Refuge – to far east of search ring
  Lee County Electric Sub-station – from a technical standpoint would work, limited to one hundred and twenty feet and the south side of the road is residential
  Sanibel Fire Control District – from a technical standpoint would work, but limited to an eight-five foot tower, limited ground space, which abuts residential areas to the east and west
  Wulfert Pump Station – footprint of property was to small
  Wulfert Road Water Reclamation Facility – met all requirements and is City-owned
- Proposed lease agreement
- City would generate a revenue
- City emergency operations located at the one hundred foot level
- Would not encroach any future plan by City utilities
- Test run with a balloon at one hundred fifty feet without incident and site buffered by vegetation
- Antennas would be flush mounted
- No accessory lighting required
- Base of tower would be a fence area fifty by fifty for future collators
- Verizon equipment house in three or four elevated cabinets
- Environmental Assessment completed
- FAA approved height with no lighting needed, application for FCC ID number submitted, but building permit needed
- Tower designed for additional carriers
- Verizon would not need additional towers through year five once tower was operable, twelve years to far to predict

Council recessed at 3:40 p.m.

Council reconvened at 3:45 p.m.

Mr. Bruce Rogers, Planning Director spoke to the following requirements and submitted the Staff Report as a City exhibit:

- Through adoption of Ordinance 99-07 areas were designated for monopoles to a height of one hundred forty-nine feet, which would require no FAA lighting and prefer to have a few taller structures rather than more shorter structures
- Request from Mosquitoes Control for no more than one hundred fifty feet because of spraying for mosquitoes
- Incentive given to carrier was the expediting of the permitting process
- Proposed lease between Verizon and the City to use the Wulfert Road property would come before Council if the request were approved

- No infringement of the future plans of the wastewater site
- Application compliant with the Land Development Code
- Requirements under Section 78-7 of LDC "Exempted Provision" necessitates a finding that the application would be consistent with the Sanibel Plan
- Section 126-1512 requires consistence with the Sanibel Plan

Me. Austin White, Esquire with Becker and Polycoff representing the Sanctuary Homeowners Association mentioned the settlement agreement reached in 1990 in the case of Gienelli versus The City of Sanibel is as follows:

- All commercial uses except as set forth in the settlement agreement were eliminated from the site
- Allows certain commercial uses, which include the Wastewater Treatment Plant, Gold Club, facilities associated with Golf Club and the club house
- Other permitted uses would be prohibited except with a conditional use permit in accordance with the agreement and the LDC
- When amending the Comprehensive Plan and LDC would govern and control the development of property except as agreement reads
- Telecommunications tower not a permitted use due to being a commercial use of property
- Settlement agreement referenced in the Sanibel Plan in the map section applicable to the site, as well as referenced in the PUD Zoning Ordinance applicable to the property
- Zoning Code states it was designed to implement the provision of the amended stipulation in the general agreement
- PUD list permitted use, which allow no commercial uses, except as listed in the settlement agreement
- Monopole conflicts with the settlement agreement, which was incorporated within the Sanibel Plan and the PUD code
- Amendment needed to allow the use
- Section 78-87 states the City would be exempted not another applicant, such as Verizon or MasTec
- City exempt use only for a valid public purpose
- Proposed application does not met all the requirements of the Code

Mr. Ted Kreines, President of Kreines and Kreines Consultants spoke to the deficiencies in the proposed application: He requested a Verizon binder from Mr. Jerry Knight.

- MasTec Wireless application not a Verizon Wireless application
- Value of property could be affected by the presence of a telecommunications tower between five and fifteen percent
- Possible tax revenue to the City
- Section 78-2 LDC regarding prohibiting certain structures and uses to serve the value of property

- The mandate of the Telecommunications Act (TCA) of 1996 does not exist and does not apply to proposed application and the application submits the TCA promotes competition and reduce regulation
- TCA grants municipalities the ability to regulate telecommunication uses

Discussion ensued regarding not discussing the ordinance or the Telecommunication Act, but the application, continuation of the Verizon hearing so every one could be heard, decision would not be if the ordinance is good or bad, but if the application meets the standards of the ordinance and if it does would be approved.

Mr. Kreines continued after the discussion to make the following points:

- MasTec making application and does not have any required licenses to operate, own or install a telecommunications tower
- Monopole not a primary use in the LDC, but in a PUD for the Wulfert Point site
- Rezoning process needed for the monopole
- City exempted use, but proposal was commercial development
- Monopole not in a zoning district, but a PUD, not in VM zoning district
- Application proposes a site of 6.77 acres, different than the use
- Fifty by fifty foot site would not be the request, but the 6.77 acres
- Compound size would house adequate space for future carriers, but would be a sixty by sixty foot compound with collocaters
- Attached to application was a list of City-owned equipment provided by the City at the base of the tower
- No mention of numbers and types of collocaters
- No saltwater intrusion to the freshwater aquifer, no support to ensure no intrusion
- Disagrees with drawing of boxes at the base of tower; would like to see manufacturer and type at four different elevations
- No evidence that there would be only three to four additional carriers
- Disagrees that the tower would be designed to LDC and building regulations
- Disagrees with the Planning Department report stating the application substantially meets requirements, must have proof requirements had been met
- Ordinance not about waiting until the building permit would be issued, but relates to zoning and issuing development permit
- What kind of generator; possible open container and pollution of waters (high coastal area)
- Visual impact from public view would not be mitigated, wavier occurred due to vegetative growth around the parameter of the compound
- No competent substantial evidence on application
- Submission of photo simulation needed
- Must demonstrate specific LDC had been met prior to City Council approval
- No adaptation that base structures would meet the one hundred twenty mile per hour code
- Ground mounted facility as a primary use must submit an inventory report of existing structures including all utility within the search ring to serve as alternatives to the proposed ground mounted facility. Report not submitted.

- No report listing all sites included in the search ring.
- No vehicle could pass through gates to work within facilities
- No attempts made to show there are slimmer monopoles
- Could have been sited better on 6.77 parcel
- Materials required are not submitted within the application in accordance with the LDC
- Settlement agreement within the Sanibel Plan into the record
- Gopher tortoise burrows found on the site, only sixty feet from the proposed leased area
- No wildlife plan to preserve a portion of land for indigenous wildlife submitted with application
- No verification the gopher tortoises would be protected on the site
- See no waivers by the City Manager or Planning Commission
- No site plan that shows existing development, height or setbacks
- No site plan that shows adjacent properties, screenings of adjacent properties or public views
- Application shows three antennas
- Does not show any back up power

Discussion ensued regarding the application being deficient; sharing deficiency list with Verizon, by Code the project was City-exempt, if hearing continued application deficiencies must be qualified and settlement agreement not barring Council from making a determination.

Mr. Kreines spoke regarding the following:

- No plat site submitted
- No dimensions specified of structural members or mounting facilitates that would be incorporated in to the support structure
- Who is authorizing whom to be the applicant
- No identification of wildlife on site
- Need Environmental Assessment
- No statement of zoning classification
- Possibility of flooding and requirements
- Problem with meeting only codes sent to applicant in blue from Planning staff
- Radio frequency issues not totally addressed or identified
- Test accepted equipment not submitted

Discussion ensued regarding Council responsibility to rule on deficiencies brought forward by Mr. Kreines, if application denied, issue a written decision with substantial evidence that support the decision and the need for rebuttal from staff and the applicant, exchange of information and presentation of both sides.

Council recessed at 5:42 p.m.

Council reconvened at 5:48 p.m.

Discussion ensued regarding scheduling the continuation, Mr. Knight requesting thirty days, respecting and maintaining a record for the quasi-judicial procedure, next presentation all questions should be answered and Council and anyone else should submit any questions to the City Attorney's office,

Mayor Theiss made a motion, seconded by Vice Mayor Walsh to continue the Verizon Hearing on Friday, June 14 at 9:00 a.m.

Public Comment:
None.

The motion passed unanimously. Councilman Harrity was excused.

CLAM BAYOU UPDATE:
Ms. Zimomra stated she had another meeting with interested parties regarding the restoration of Clam Bayou. She further stated the project had been divided in to two projects; temporary bleed, which would require obtaining an emergency permit to dig a ditch to relieve high water and would be done by City crews. She proposed that the pay the engineer $500 so they would become the engineer of record on the application. The second project would be the box culvert that would go under San-Cap Road. She explained that staff's position was that until a cost estimate could be ascertained it would be prudent for staff to make a recommendation. She stated there would be a land acquisition concerning the culvert and looking for a cost of the bleed to make application for the permit and have in hand before the rainy season starts. She continued by saying that staff recommends waiting until a firm cost for phase two before staff gets involved in applying for grants.

Public Comment:
Ralph Clark enumerated the following:

- Cost to construct a box culvert would be between $180,000 and $250,000
- Engineering costs $37,000
- Land acquisition of approximately one acre, which was unbuildable; between $1,000 to $50,000
- Costs for traffic control
- Total costs between $200,000 to $300,000
- Met with three groups in the Dinkins Bayou area
- Grant application work

Discussion ensued regarding Sanibel and Lee County taking the led in Clam Bayou mangrove killing, no money allocated for funding a bleed, non-profit group already organized, apply for grant monies, the need for additional information, different grants available and the cycle for each and the City would participate in the construction of the box culvert upon more research.

Commissioner Dillon made a motion that the Pledge of Allegiance be recited at the beginning of every Planning Commission meeting. Vice Chair Gargano seconded the motion. The motion carried by a unanimous voice vote; Commissioner Downes being excused.

ITEM #3. Consideration of Request for Continuance

There were no Requests for Continuance.

ITEM #4. Adoption of Resolutions

There were no Resolutions for consideration.

ITEM #5. Commencement of Scheduled Public Hearings:

There were no Scheduled Public Hearings.

ITEM #6. Report from Director of Planning or staff.

There was no report from the Director of Planning or staff.

ITEM #7. Report from Commission Liaison to the City Council.

Chair Robison reported the following:

1. Most of the morning session was a discussion regarding the City's employees' retirement plan. The plan was restated and the decision to create a board of trustees was continued.

2. Contract negotiations with Clairon and Associates were approved.

3. A Resolution was approved making the Sanibel Library project a City Exempt project.

4. After substantial discussions the Verizon Monopole Project was continued to a later date.

In addition to Chair Robison's report, Attorney Wyckoff reported that on Thursday, April 25 he was going to travel to Gainesville to interview law students for a City Law Clerk position. Mr. Wyckoff also stated that during the afternoon of April 25 he would be addressing the Conservation Clinic. Commissioner Bogen asked what the duties of the Law Clerk would be. Mr. Wyckoff replied that the duties will be assisting with Planning Commission matters including attending Planning Commission meetings, preparing resolutions and ordinances, legal research and other duties that he will assign. Mr. Wyckoff said that the ultimate plan is to employ a different student each semester so the City will have a year-round law clerk.

Geographic. Discussion ensued regarding the advantages and disadvantages of this prestigious award.

Councilmember Brown made motion, seconded by Vice-Mayor Walsh, to decline the request to submit Sanibel as a candidate.

Pubic Comment:
Moni Arnowitz spoke to Council regarding her familiarity with National Geographic Travelers Magazine and that it is an excellent magazine and that this type of magazine would attract people who love nature and respect nature. She suggested that Council spend a little more time thinking about this.

Discussion ensued regarding the increase number of visitors and traffic that this award may bring and how it would impact the island.

The motion passed by a 4-1 vote to not be submitted as an applicant for this award. Councilman Harrity opposed.

Ms. Zimomra handed out Ordinance 02-14 as introduced to Council and approved as to form by the City Attorney Doug Wyckoff. The top right corner of the Ordinance has the following verbiage, "As introduced on 06/118/02."

Council recessed at 3:47 p.m.

Council reconvened at 3:57 p.m.

CITY ATTORNEY'S REPORT.
Discussion ensued regarding the Verizon Telecommunication Tower application. The hearing has been set for August 07, 2002. Doug Wyckoff reminded City Council that they are in the middle of a Quasi-judicial hearing.

Mr. Wyckoff spoke on the 5 Year Budget Projection Review Committees recommendation to increase the Occupational License Taxes and My. Wyckoff stated that tax increases can only come through legislation and that taxes could be raised in October 2003 if Council approved.

Mr. Wyckoff updated Council on a Code Enforcement ruling against Mr. Boyce on Lighthouse Way where he made an addition to his dock without permit and then later demolished the dock without a permit. The fines accumulated are in excess of $20,000.00. Mr. Boyce is trying to refinance his home and offered $1,000.00 to settle the lien. Council agreed to reject his offer of a settlement and foreclose on the liens if Mr. Boyce does not satisfy the lien of $20,000.00 plus. Council requested that Mr. Wyckoff find out if there would be any extenuating circumstances and then report back to Council at the next meeting.

Performance Evaluation:

Mayor Theiss advised Council that there might be a need for Special Meeting(s) regarding the City Attorney's termination. Council agreed.

Discussion ensued regarding the letter being delivered to Mr. Wyckoff pursuant to Section 4.02 (b) of the City Charter.

Public Comment:
Phyllis Bogen spoke regarding hiring a City Attorney.

Marie Gargano spoke regarding hiring an Attorney.
John LaGorce spoke regarding the Verizon hearing.

Councilman Brown made a motion to authorize the City Manager to look into hiring an attorney or a law firm to serve as City Attorney on a part-time/temporary basis.

Councilman Brown withdrew his motion.

Vice Mayor Walsh made a motion, seconded by Councilman Brown, to authorize the City Manager to obtain counsel for the Verizon hearing in the form of a firm or individual lawyer, immediately start the process for the possible hiring of a City Attorney at a future time and also utilize the same lawyer or firm on a temporary basis to serve the Planning Commission and make sure there are no potential conflicts with respect to either representation.

Vice Mayor Walsh amended his motion to authorize the City Manager to take action to secure those services and make a recommendation to Council to be approved Wednesday, August 07 at a Special Meeting to convene at 8:30 a.m. to consider the recommendations with respect to Council.

The motion died for the lack of a second.

Mayor Theiss made a motion, seconded by Councilman Brown, to continue the Verizon hearing to one of the four dates of September 12th, 13th, or 19th, 20th.

Discussion regarding the Verizon hearing.

Public Comment:
Peter Pappas spoke regarding the City Manager hiring a temporary City Attorney.

Henry Glissman spoke regarding canceling the Verizon hearing.

John LaGorce spoke regarding the canceling the Verizon hearing.

Jack Samler spoke regarding the canceling the Verizon hearing.

Marie Gargano spoke regarding canceling the Verizon hearing.

Mayor Theiss and Councilman Brown voted for the motion and Vice Mayor Walsh, Councilman Harrity and Councilmember Workman voted against the motion.

The motion failed three to two.

Council recessed at 12: 56 p.m.

Council reconvened at 2:30 p. m.

COMMITTEES, BOARDS & COMMISSION:

Acceptance of Ellen Steele's resignation from the Vegetation Committee
Council accepted Ms. Steele's resignation by consensus, but with regret and thanks.

Appointment of citizens to the General Employees Pension Board.
Council decided to interview the last two applicants and delay appointments to the General Employees Pension Board until August 20 Council meeting.

Public Comment:
Mike Cuscaden spoke regarding an August 14 General Employee Pension Board meeting.

Ms. Zimomra stated the meeting would be canceled.

Request from Sanibel Beautification for an extension of water lines at the intersection of Lindgren Blvd/Periwinkle Way.
Ms. Ada Shissler spoke to Council regarding the request for the installation of water lines at the Periwinkle Way and Lindgren Blvd. intersection.

Mr. Eric Jorgenson explained the plantings needed water to get established. He further explained that currently a water hose was hooked-up to the fire hydrant and the difficulties in taking it across roadways. He also explained that the request was for a hose bib to be located at each island at the intersection with an underground line to be installed when the intersection was repaved.

Councilman Brown made a motion, seconded by Vice Mayor Walsh, to approve up to $5,000 to install a water line and a hose bib at each of the four corners of the intersection of Periwinkle Way and Lindgren Blvd. when the road was resurfaced.

Public Comment:
Marie Gargano spoke regarding the installation of the hose bibs.

Discussion ensued regarding who would pay for the maintenance of the hose bibs, when the initial request was made there was to be no cost to the City and Eric Jorgenson stating

CITY COUNCIL SPECIAL MEETING
VERIZON HEARING
AUGUST 07, 2002

Mayor Theiss called the meeting to order at 9:00 a.m.

Members present: Mayor Theiss, Vice Mayor Walsh, Councilman Brown, Councilman Harrity and Councilmember Workman.

Councilman Harrity gave the Invocation and led in the Pledge of Allegiance.

Mr. Kenneth Cuyler, Esquire introduced himself.

Continuation of the Verizon Hearing.
Vice Mayor Dick Walsh stated he had visited the site on a different matter, had received various copied letters that was distributed from participants and also received a call from Mark Giattini, as well as a fax from Mr. Giattini requesting a meeting, which was not arranged. He further stated his investment advisor bought three hundred shares of Verizon stock in 2001.

Mr. Cuyler stated the ownership of three hundred shares did not constitute a conflict of interest.

Councilman Harrity stated he had spoke with Mark Giattini regarding a meeting, but no meeting occurred.

Councilman Steve spoke to Mark Giattini, was a member of the Sanctuary Golf Club and stated there was conversation at a cocktail party.

Mayor Theiss met for lunch on occasion with Mark Giattini as a personal friend, spoke with a number of people regarding the issue in a passing nature and spoke to Mr. Robert Pritt, but not regarding the Verizon issue.

Councilmember Workman stated she received a fax requesting a meeting, but did not meet due to ex parte.

Discussion ensued regarding the procedure, Council hearing only the substantive issues of the hearing, staff giving a brief background, matters that need resolving and presentation of petitioner and objectors.

Mr. Bruce Rogers, Planning Director introduced Mr. Mike Curtis, the City's telecommunications consultant. He stated he felt it necessary to have Mr. Curtis available because of his expertise in telecommunications. He concluded the staff report as of April 16th by saying the applicant had demonstrated compliance and also pointed out there were issues in obtaining the building permit, no construction plans, and during the permitting process construction plans were not generally asked to be provided. He further stated he felt that the Verizon application demonstrated that all the requirements of the code for constructions of the telecommunications tower was met. He

explained that Verizon had submitted a supplemental application addressing the questions raised at the April 16 meeting.

Discussion ensued regarding public concern that the City had not received all documentation, time schedule for supplemental materials and if all information was shared with all parties as well as Council before the July 17th deadline as outline in the order, order designated the all materials were to be submitted by July 17, 2002, concern of the objectors list of objections and a letter from Mr. Ted Krienans submitted on July 24th .

The following people were sworn in:

Bruce Rogers, Planning Director
Robert Pritt, Esquire representing Verizon Wireless
Mark Giattini representing Caloosa Shores Homeowners Association
John LaGorce resident
Jerry Knight, Esquire representing Verizon Wireless
Weimar Taborga representing Verizon Wireless
Jaime Lugo representing Verizon Wireless
Jason Laske representing Verizon Wireless
Mike Clementi representing Verizon Wireless
Austin White, Esquire representing the Sanctuary at Wulfert Point Community Association
Coleman Holt representing Verizon Wireless
Michael Kurtis, Kurtis and Associates consultant to the City

Mr. Knight representing Verizon, clarified that Verizon had agreed to the pre-hearing order prepared by Mr. Wyckoff, which would allow an orderly exchange of information between the parties. He explained that the objectors had submitted their objections and in response Verizon had submitted a supplemental package to the application on July 03 answering those objections since all materials were to be submitted according to the pre-hearing order by July 17th . He further explained upon receiving a memo from Ted Krienans on July 24, Verizon responded their disagreement in the acceptance of the letter past the deadline and even though it was past the deadline, Verizon also responded to the items raised by Mr. Krienans' letter that was dated July 31st. Mr. Knight requested that Ted Krienans' memo be denied or the letter filed by Verizon on July 31 be allow submission, but he stated that Verizon was ready to verbally answer the Krienans objections.

Discussion ensued regarding the request by Mr. Knight and Council not receiving the Verizon response of July 31st .

Mr. Cuyler stated there are two views:

- Legal procedural side
- City Council's view with the material submitted and prepared for the hearing

Mr. Cuyler stated it might be better to be liberal in the taking of documents. He explained both views.

Discussion ensued regarding Council allowing the information submitted by Verizon and all documents were shared with all parties.

Austin White, Esquire representing Sanctuary Homeowners at Wulfert Point Association, as well as speaking for Mark Giattini stated they had no problem allowing the documents submitted by Verizon on July 31st.

Council decided to recessed to have copies made of the above-mentioned documents.

Council recessed at 10:00 a.m.

Council reconvened at 10:15 a.m.

Discussion ensued regarding the submittal of material and marked as exhibits anything referred to during the presentation.

Verizon presented the following: (submitted the codified ordinance 126-1536 as petitioners Exhibit A) and spoke to the following:

- Ordinance 99-07 adopted by Council in response to the Telecommunication Act
- City adopted a Wireless Master Plan
- Ordinance 99-07 established telecommunication tolerate areas
- Construction of a monopole with a fifty by fifty compound (2500 sq. ft.) including tower and enclosed by a fenced where equipment would be located
- Coverage needed on the west end of Sanibel

Discussion ensued regarding asking questions as the presentation continued and it was decided to allow questioning during the presentation.

Vice Mayor Walsh asked why Verizon could not use the Sprint tower? He also asked if the service was inadequate because it would not reach the western end of Sanibel or that service would not reach beyond Sanibel?

Jerry Knight and Jason Laske replied:

- That additional coverage could not be achieved on any existing facilities
- Coverage won't reach the western end of Sanibel, nor would it extend past the island
- The Sprint tower was located to close to the existing tower (Wireless One), which would cause signal interference and overlapping coverage
- Would not allow coverage on the western part of the island

Councilman Brown stated the Telecommunications Act ensured that there would be coverage and make municipalities responsible for that coverage, but not responsible for other areas.

Mr. Mike Kurtis stated the intention of the Telecommunications Act was to make sure that municipalities did not preclude telecommunications within its jurisdiction.

Discussion ensued regarding the location of a tower being the key to coverage, Sanibel having no obligation to supply service to other areas, during discussions on Ordinance 99-07 having one tower at 149 feet in height to provide service through multiple carriers or multiple small towers with one carrier, Ordinance 99-07 allowing a site to build a 149 foot tower and any petition would be evaluated by said ordinance

Mr. Kurtis gave a brief history of how the ordinance originated.

- Process spanned two years and seventeen drafts and seventeenth draft adopted
- Found no good place for a telecommunications tower. There would be issue no matter where a tower was located.
- Looked at areas that gave the option of less traveled. (Wulfert Road)
- Three users a minimum requirement.
- Tower required to be painted to blend in as much as possible.
- City recognized the need for telecommunications for a variety of reasons:
  During the winter months the landline cannot carry the amount of transmissions;
  Public safety for the Police Department needs found inadequate; and since the Ordinance was adopted, 911 carriers are required while a portable handset is used and dialing 911 that the carrier must forward the call, phone number and geographical location within 400 feet;
  Minimize the visual impact;
  Ordinance helps limit one user tower requests.
  Avoid all the carriers from building a 170 feet tower.

Mr. Knight continued:

- City owns property and the application would be exempted from the normal LDC review
- City would establish and expedite the permitting process, but will make the site available at prevailing market conditions for a lease agreement.
- Electrical authority on San-Cap is limited to 120 feet and limits the number of co locaters; Australian Pines limit coverage since some are exceeding seventy-five feet.
- Antennas flush mounted; no lights, painted to blend in to the sky; will do off-site landscaping if it would address concerns

Jason Laske, MasTec highlighted the application and they are as follows:

- Search range concluded areas lacking coverage
- Identified numerous locations
- IWA treatment facility
- Sprint tower (165 feet and available sites 110 feet and below) located to far east
- Lee County Electric substation limited to 120 feet
- Ding Darling Refuge
- Sanibel Elementary School
- Sanibel Fire Control District limited to 80 feet.
- Wulfert Road Water Reclamation Facility 149 feet

Mayor Theiss asked if the height of the Lee County Electric substation was 149 feet, would that allow the necessary coverage.

Mr. Ty Wymart, Verizon Engineer stated yes, the height would allow coverage to the west end of the island.

Mr. Cuyler reminded Council that the ordinance only allows the Lee County Electric substation tower height at 120 feet.

Jason Laske continued his presentation as follows:

- Identified a 50 x 50 area for compound to shelter equipment and tower would not impact future growth of the sewer plant
- Approximately 900 feet to west and east approximately 1000 feet to nearest residential structure.
- Modified the site plan, equipment located in the compound on a small elevated platform
- Highest point of the appendage would be a 4 ft tall lightning rod (total height 149 feet)
- Accounted for three co locaters and future co locater antennas
- Tower design meets Florida building code and has been certified by an engineer (Kimley Horn)
- Foundation design by R. W. Harris, soil testing by PSI and signed by a certified engineer, cement casen drill to a depth of 26 feet and casing of 72 inches wide and a metal bracing with cement and bolted on with a series of plates that meet the Florida building code wind requirements
- Soil testing and a detailed report states the aquifer would not indicate any presents of any low permeable semi-confining layer, i.e. clare aquaclude within the plan depth shaft. Would not penetrate the aquaclude or the fresh water lens
- Ft. Worth Tower indicated the tower design meets Florida building code, and meets the standards that are currently in effect. The EIA-22 or 222-F structural standard for steel antenna towers was not in affect. The EIA-22G standard not in effect, but was being considered.

Vice Mayor Walsh asked the status of the discussion regarding EIA-22 or 22F versus EIA-22G.

Mr. Kurtis replied that the EIA/TIA was constantly reviewing standards to update and make modifications. He stated that 222-G was in the preliminary stages of analysis and would be subject to change since it had not been adopted and would not affect the wind loading at the propose site.

Jason Laske continued:

- Series of four cabinets housing the switching and radio equipment
- Decathlon 5.5 generator that would set adjacent to the equipment that would have a 12-volt battery (car battery), which are sealed using approximately one point five quart of oil and used in case of emergency. And warning signs would be the dame that are on a AAA battery
- Amerigas would provide a three by eight propane tank, which would require a permit.

Mike Clementia, Verizon Construction Manager stated the site would be unmanned and would be visited once a month by a cell techs periodically to check for problems.

Jason Laske continues his presentation:

- Antenna would be approximately sixty-four inches tall, six point one inches in length and one point nine inches thick
- Additional carriers would have similar antennas
- Tower would be 145 feet with a four foot lightning rod with a total height of 149 feet
- Exterior dimension from right to left would have a three foot diameter
- Any additional colocaters would have to come to the City to be permitted
- Preliminary lease would give the City an economic benefit, as well as having emergency services located on the tower
- Base of pole is approximately four feet
- Antenna design to receive on one side and send on the other side
- City mount antenna at approximately 100 feet
- No environmental impact
- Color maps shown regarding the signal (Petitioners Exhibit B)

Discussion ensued regarding the height of the tower, the signal only for the west end, shorter tower, Ordinance 99-07 controlling less towers, providing coverage to the west end of the island, possible elimination of other towers, primary beneficiaries the tower would be Sanibel, if tower moved further west it would leave a gap in the signal and chart shown to Council showed little or no coverage on the west end of the island.

Mr. Tarborga spoke to the Council regarding the allegation that no certified engineer had reviewed the documents.

Mr. Kurtis stated that the FCC looks for engineers that have an engineer degree to submit technical data.

Discussion ensued regarding an engineer requirement by FCC and if Weimar Taborga was a qualified engineer. Mr. Tarborga's resume was marked as Petitioners Exhibit C.

Mr. Coleman Holt, MFS resume was submitted and marked as Petitioners Exhibit D. His report consisted of the environmental impact on animals, which found several gopher tortoises nest and explained how close construction could come to the nest and possible re-location on-site with a re-location permit. He spoke to the eagle nest, and it's location to the site and moved farther to the southwest to Silver Key. He stated the parcel was outside the mandate 1500 ft. of a protected nest and the monopole would not interfere with the flight line of migratory birds. He further stated the pole meets US Fish and Wildlife migratory bird flight below 200 feet and would not be lighted. He further stated that there would be no guide wires. He further stated that he revisited the sight and found the same findings.

Discussion ensued regarding concurring with Rob Loflin, animal runs and the affect of the tower on them, if re-locating gopher tortoises in the areas would be on the twenty-acre parcel and no effect on migratory birds.

Council recessed at 12:45 p.m.

Council reconvened at 2:23 p.m.

Mr. Mark Giannti spoke regarding his representing the Caloosa Homeowners as president. He stated that the homeowners was not aware of Ordinance 99-07 until passed and two-hundred homeowners had signed a petition against the Wulfert Point site. He stated that the homeowners surrounding the proposal had considered issues and they were worried about possible declining property values and any environmental impact. He further stated that homeowners had met with Jason Laske and an attorney from Mr. Knight's law firm regarding key alternatives to the Wulfert site, which was with an electric power grid and infrastructure, which are both visible from the road and above the tree line. He disagreed with Verizon's characterization that the Wulfert site is similarly in nature to the LCEC site because it was not visible from the road and below the tree line. He also stated that putting the tower at the Wulfert site would immediately change the character of the high-density residential area because the fourteen-foot tower would be visible. He reminded Council that at the April 16, 2002 Verizon hearing Verizon stated they would have considered the LCEC site if it was allowed to be a height of 149 feet. He also stated that the LCEC site was less than one mile away, had less residential density and he had been to several different locations for phone testing without interruption. He suggested amending the ordinance to allow 149-foot tower at the LCEC site and remove the Wulfert site from the preferred telecommunications site. He also stated that the Sanibel Bayous homeowners would accept the LCEC as the site for the Verizon towers.

Mr. Austin White, Esquire with Becker and Poliakoff representing Sanctuary Wulfert Point Community Association (225 lots and homeowners in the Sanctuary development) stated the proposed tower violates the provisions of the amended settlement and mutual release in the case of Chianelli, etal versus the City of Sanibel case number 77-184. He stated that Chianelli was the original developers of the Sanctuary. (Attached is the settlement paper as Objectors Exhibit A.) He further stated that in paragraph six of the settlement it reads as follows:

"that all commercial uses on the property, which include the Wulfert site shall be eliminated except for those uses specifically set forth in the agreement."

He stated the uses that are set forth in the agreement are as follows:

- Golf course use
- Club house
- Wastewater treatment plant

He further stated that the section of the code, which relates to the PUD for the Wulfert Point property in Section 126-1446, reads in the first sentence:

Thereof, that this division was designed to implement the terms of the amended settlement stipulation mutual release dated July 21, 1990 case number 77-1864-CA-drt Circuit Court 20th Judicial District of Florida and otherwise established standards for the development of the parcel amended relief referred to in such amended settlement stipulation and mutual release."

He continued to explain that the PUD sets forth permitted uses on the property and the permitted uses track what was in the settlement agreement and provide for only those commercial uses that are set forth in the settlement agreement. He also explained that the PUD's relationship to the settlement agreement in paragraph 7 of the settlement agreement specifically provides that the parties acknowledge and agree that the City's final action in making substantial amendments to the PUD ordinance to which the Plaintiff's object shall be grounds for seeking resolution by the court under the settlement agreement. He further explained that as successors to the plaintiff's they were objecting to the location of the tower on the site and it is clearly a commercial use and was prohibited by the settlement agreement. He stated that as the Comprehensive Plan and that the ordinance provided the inclusion of the settlement. He explained that the was a PUD settlement agreement that the parties acknowledged and agreed to and the Association objected to the placement of the proposed tower because it was a commercial use. He further explained that the LDC was amended from time to time except if the parties agree to the contrary as reflected in the settlement agreement. He stated that the Association supported the proposed tower at the LCEC location and an amendment to the telecommunications ordinance that would allow location to carry a 149 feet tower.

Discussion ensued regarding the former City Attorney verbally stating that the settlement would not prohibit the placement of a telecommunication tower, possible declaratory action (asking a judge to decide rights), explaining a Council action prohibited and taking citizens rights away and if the ordinance was in violation of settlement.

Vice Mayor Walsh asked if Mr. White had given any thought to filing a declaratory judgment action that would short circuit the building of the tower?

Mr. White answered yes.

Council asked Mr. Cuyler to define declaratory action.

Mr. Cuyler replied that a declaratory action was a compliant filed that declare certain right were unknown regarding a certain law, statute or agreement and is generally ad adversarial proceeding.

Bruce Rogers spoke to Council regarding the settlement agreement with the Sanctuary. He stated he had the transcript of the April 16 Council meeting regarding the Sanctuary Homeowners settlement agreement and it relating that there was no problem between the proposed tower and the settlement agreement. He gave the history of the settlement agreement as follows:

- 1974 Chianelli, etal filed a lawsuit reference the taking of property (76 units)
- adoption of Comprehensive Plan 1976 (45 units) litigation until 1982

- 1982 Council reached a settlement agreement and set out the terms for the development of the property
- 450 dwelling units and provision for commercial development (retail office)
- small marina authorized providing homeowners could get proper permits
- certain number of single family and multi-family dwellings
- late 1980's John Naumann came to the City and reached a purchase agreement with Gianelli etal and carried conditions upon able to renegotiate the settlement
- Naumann requested the re-negotiation for the property
- 1990 amendment to original settlement

Mr. Rogers reported that the City insisted on the following:

- Deleted the marina use
- Eliminated commercial development
- Density reduced from 400 plus to 286 units
- Better mix of single family and multi-family units change considerably assuring more single family units
- Naumann Group would build a wastewater treatment facility and transfer to the City ownership
- Reflect the 1990 amended settlement agreement in the LDC to remove it from the continuing jurisdiction of the courts
- Future Council would be able to make changes to the LDC as necessary

Discussion ensued regarding the background information given by Mr. White, any reference to commercial was for retail office, amendment to the agreement taking away the commercial development, communication towers standards and requirements contained in the LDC as an overlay district which governs placement and there being no specific discussion regarding the settlement agreement during the original telecommunications ordinance discussion and approving or denying the application.

Mr. Rogers quoted a portion of the April 16, 2002 transcripts.

Discussion ensued regarding Council concerns of a lawsuit, when the settlement agreement was affected to cause a minimized effect, looking at locations that already had a tower, reasons for choosing the particular site for telecommunication towers, public comment and the generation of revenues if built on City-owned property.

Council recessed at 3:30 p.m.

Council reconvened at 3:35 p.m.

Mr. Jerry Knight and Mr. Robert Pritt entered their rebuttal into the record.

Mr. Pritt related that the forty-three acre parcel was added between the 1982 amendment and 1990 John Naumann purchase of the property. He stated that density requirements were decreased on the parcel. He further stated that City Council had the right to amend its code after

a settlement agreement had been reached. He called Council's attention to page six lines five, six and seven of the 1990 amended settlement agreement (Petitioners Exhibit F) and read the following:

" They also acknowledge that the City Council cannot by law bargain away its power to amend the ordinance."

He further expounded on Council's sovereign power to amend the Code. He spoke to a recent court case regarding contract zoning and the fact than a City cannot give any of its sovereign power a way.

Mr. Cuyler stated for clarification, that the settlement agreement led to a PUD ordinance and the PUD ordinance and that the City Council could not bargain away it's right to amend the PUD ordinance, which was amend through the overlay of the telecommunications ordinance.

Mr. Pritt replied that was correct.

Mr. Cuyler further asked if the City sold the Wulfert Point property and the new owner requested more commercial uses, it was within the City Council's right to approve such request.

Mr. Pritt replied that was correct and Council asked for several changes to the PUD at the request of the Sanctuary at Wulfert Point. He stated that the conveyance of the Wulfert Road property to the City was during negotiations and there were no restrictions on the property.

Discussion ensued regarding a previous ordinance not restricting future Councils from making decisions or amending the Code.

Mr. Knight stated there was a letter in the record responding to Mr. White's position. He stated staff found the Verizon application to be sufficient and provided additional information to rest any concerns from the April 16, 2002 hearing. He further stated that Verizon was not looking for a dispute or litigation and wanted resolution. He also stated that the emphasis of the ordinance was to go to the Wulfert Road site and noted that the LCEC site dads not meet the needs of Verizon. He stated that it had already been shown that there was not sufficient coverage on the west end of the island. He further stated that Verizon had met all the requirements of the application process and then some and requested that Council approve the permit. He asked that the 1982 settlement agreement be Petitioners Exhibit G.

Council asked Mr. Cuyler what their options were.

Mr. Cuyler stated the following:

- Continue the entire matter
- Based on the evidence presented reach a conclusion to deny the petition
- Reach a conclusion the petition should be granted and take no further action, in which case the permit would ultimately be issued

- Grant approval based on the petition without issuing permits until legal advice were given

Discussion ensued regarding Mr. Cuyler issuing an opinion as to the validity of the hearing in two weeks, approving the petition on the condition that Counsel concludes the settlement would allow, continuance based on information of opinion of settlement order and public safety issue with no dependable communications on the west end of the island.

Mr. Mike Kurtis stated the first thing that he did for the City was to establish what the current status of telecommunications on the island was. He further stated that the coverage was poor on the west end and some carriers had poor coverage on the east end. He reminded Council that at the April 16th hearing Mr. Austin White admitted the lack of coverage on the west end of the island as well as a public safety issue as noted by the Police Department. He explained that the level of service deemed to be acceptable to customers and carriers was the topic of interest and when the FCC looks at reliability it talks about ninety percent reliable service. He further explained that if an area was depicted as having poor coverage there would still be some identifiable spots where phone calls could be made. He also explained that what carriers were looking for as well as the City was when a call needs to be made statistically there would be high reliable service.

Mr. Cuyler asked Mr. Kurtis to go over the jurisdiction in quasi-judicial proceedings.

Mr. Kurtis stated there were three issues presented and they are as follows:

- Suitability of Wulfert rd site
- Whether or not Verizon had met the criteria of the telecommunications ordinance
- Whether or not the amended settlement agreement impacts the proceeding

He further stated that the only issue properly before Council was whether or not Verizon had complied with the application requirements. He also stated that if the ordinance was amended the decisions would be which ordinance would the application fall under. He also stated that there was doubt that Verizon had met the requirements of the ordinance and the standard to be applied was whether or not there was substantial evidence in the record that the requirements have not been met. He explained that the settlement agreement had nothing to do with the fact that Verizon had complied with the ordinance and if it ended up in litigation there was two different forums for jurisdiction and they are:

- A denial raised in the context of the Telecom Act would be taken to federal court
- Local Land Use violations would be handled in the local courts

Vice Mayor Walsh stated that based on the evidence heard and the comment by Mr. Austin White that the sole issue remaining was the impact of the settlement agreement on the issue, he made the following motion, seconded by Councilmember Workman, that the Verizon Wireless request for City Council approval for construction of 149 feet monopole above ground level (AGL), to attach antennas to the monopole, construct equipment shelters to house the Base Transceiver Station (BTS), via cables to connect the BTS to the antennas and to fence in an area

50' x 50'to contain the equipment on the City-owned land at the Wulfert Road Wastewater Treatment Plant, at 2222 Wulfert Road be approved and that the Planning Department be instructed not to issue any permits for a period of two weeks in order to enable Council to obtain a written opinion of the impact of the amended stipulation and mutual release between D. R. Chianelli, etal versus the City of Sanibel and impact on the issuance of such permits.

Mr. Rogers asked Vice Mayor Walsh if he would agree to ask the City Attorney to prepare a resolution reflecting Council's decision and incorporate into the resolution the legal opinion as well.

Vice Mayor Walsh withdrew the motion and Councilmember Workman withdrew her second.

Discussion ensued regarding waiting two weeks and approving the withdrawn motion, closing the public hearing and taking no more evidence

Councilman Brown made a motion to continue the hearing until the August 20 Council meeting, at which time the legal report would be available and make a decision at that time.

The motion failed for the lack of a second.

Vice Mayor Walsh made a motion, seconded by Councilmember Workman, to close the hearing and request that staff and the acting City Attorney prepare an appropriate resolution approving the Verizon Wireless request for Council approval for construction of 149 feet monopole above ground level (AGL), to attach antennas to the monopole, construct equipment shelters to house the Base Transceiver Station (BTS), via cables to connect the BTS to the antennas and to fence in an area 50'x 50'to contain the equipment on the City-owned land at the Wulfert Road Wastewater Treatment Plant, at 2222 Wulfert Road for presentation to Council at its regularly scheduled Council meeting on August 20, 2002 at 9:00 a. m. and the City Attorney would render an opinion regarding the amended settlement stipulation and mutual release in the matter of D. R. Chianelli, etal versus the City of Sanibel.

Discussion ensued regarding a resolution be prepared to approve the application, the requested opinion regarding how the settlement affects the application from Mr. Cuyler and the motion.

Mayor Theiss, Vice Mayor Walsh, Councilman Harrity, Councilmember Workman voted for the motion and Councilman Brown voted in opposition of the motion.

Discussion ensued regarding the attorneys for Verizon and the objectors having the opportunity to speak with Mr. Cuyler prior to his opinion.

Ms. Zimomra asked if Council would like to have a Special Meeting regarding a contract for a City Attorney.

Discussion ensued regarding the time and date of the Special Meeting.

Council scheduled a Special Meeting for Friday, August 09 at 9:00 a. m.

There being no further business the meeting was adjourned at 4:38 p.m.

Respectfully submitted by,

Pamela Smith, CMC
Deputy City Clerk

CITY COUNCIL SPECIAL MEETING
AUGUST 07, 2002

Mayor Theiss called the meeting to order at 8:35 a.m.

Members present: Mayor Theiss, Vice Mayor Walsh, Councilman Brown, Councilman Harrity and Councilmember Workman.

Discussion regarding legal counsel for the City regarding the City Attorney matter and the letter that would go to Mr. Wyckoff.

Ms. Zimomra stated she had spoken to Wayne Helsby, Esquire with Norton, Allen and Blue and he or someone in his firm would work with the City regarding the matter.

Vice Mayor Walsh asked Council to look at the letter to Mr. Wyckoff and called their attention to the third paragraph, next to last line, beginning with the word **"specific"** and asked to add the word **"some"** before **"specific."** Council agreed.

Discussion ensued regarding the wording in the Charter for removal of the City Attorney and signatures on the letter, position of City Attorney, having an Attorney for the Verizon hearing, possibility of having a workshop, residency of the City Attorney and salary and contacting the firm of Allen, Norton and Blue regarding the City Attorney matter.

There being no further business the meeting was adjourned at 8:52 a.m.

Respectfully submitted by,

Pamela Smith, CMC
Deputy City Clerk

CITY COUNCIL SPECIAL MEETING

AUGUST 09, 2002

Mayor Theiss called the meeting to order at 8:35 a. m.

Members present: Mayor Theiss, Vice Mayor Walsh, Councilman Harrity and Councilmember Workman. Councilman Brown was absent and Council excused him.

Discussion regarding City's legal representation.
Ms. Zimomra stated that Kenneth Cuyler, Esquire served the City at the Verizon hearing and was available to serve as City Attorney and recommended that Council appoint Mr. Cuyler until the August 20 Council meeting and authorize a resolution to be brought forward at that time appointing him a Acting City Attorney until such time as Council gives further direction or makes a subsequent decision.

Councilman Harrity made a motion, seconded by Vice Mayor Walsh, to appoint Mr. Cuyler until the August 20th Council meeting at which time a resolution would be brought forward to appoint him as Acting City Attorney at $185 per hour.

Discussion ensued regarding charge for Mr. Cuyler and/or partners, which would be $185 per hour, experience of firm (Goodlette, Coleman and Johnson) and Mr. Cuyler as lead attorney for the firm, and that he also serves as City Attorney for Marco Island, Mr. Cuyler's experience other partners/office personnel that might be involved, charges for paralegals would be at $60 to $85 per hour, and the fact that the City only contacted Mr. Cuyler on the afternoon of Tuesday, August 06 by Bruce Rogers, Planning Director.

Public Comment:
None.

The motion passed unanimously.

Public Comment:
Ted Tyson spoke to Council concerning the absence of the Pledge of Allegiance.

In response, Council pointed out that customarily there are neither Invocations or Pledges at Special Meetings of Council.

There being no further business the meeting was adjourned at 8:44 a.m.

Respectfully submitted by,

Pamela Smith, CMC
Deputy City Clerk

Mr. Cuyler advised that Council admit and consider both legal memorandums from both parties into the record. He then summarized both memorandums stating the Holland and Knight support his opinion and that Becker and Poliakoff disagreed with his opinion. He further stated that Council could hear legal arguments after the closing of a Public Hearing, but that no new factual information may be presented.

Council agreed to allow the objectors (Becker and Poliakoff) go first with their presentation.

Council recessed for a break at 9:59 a.m.

Council reconvened at 10:05 a.m.

Mr. Austin White, Esquire with Becker & Poliakoff, legal counsel for the Sanctuary at Wulfert Point Community stated that any amendment to the settlement agreement and the PUD could not be to the detriment to the members of the association.

Consideration of **RESOLUTION 02-83 APPROVING THE CONSTRUCTION OF 149 FEET MONOPOLE ABOVE GROUND LEVEL (AGL), TO ATTACH ANTENNAS TO THE MONOPOLE, CONSTRUCT EQUIPMENT SHELTER TO HOUSE THE BASE TRANSCEIVER STATION (BTS), VIA CABLES TO CONNECT THE BTS TO THE ANTENNA AND TO FENCE IN AN AREA 50' x 50'TO CONTAIN THE EQUIPMENT ON THE CITY-OWNED LAND AT THE WULFERT ROAD WASTEWATER TREATMENT PLANT, AT 2222 WULFERT ROAD. THE REQUEST IS BEING PROCESSED UNDER THE PROVISION OF LAND DEVELOPMENT CODE SECTION 78-7, CITY EXEMPTED. THE APPLICATION WAS FILED BY MASTEC NORTH AMERICA, INC., ON BEHALF OF VERIZON WIRELESS PERSONAL COMMUNICATIONS, LP . D. B. A. VERIZON WIRELESS.**

Ms. Zimomra read the title of Resolution 02-83.

Vice Mayor Walsh made a motion to adopt Resolution 02-83 and read the title of the Resolution into the record.

Vice Mayor Walsh amended his motion, seconded by Councilmember Workman, to adopt Resolution 02-83 as the correct the title was read by Ms. Zimomra read.

Mr. Bruce Rogers, Planning Director spoke regarding the Ordinance that limits the height to of the LCEC site to 120 feet. He stated that any tower taller would require an amendment to the Ordinance.

Mr. Jerry Knight, Esquire with Holland and Knight representing Verizon Wireless spoke to Council regarding compromise and that the Sanctuary does not want the tower at all.

Mr. Austin White stated that he would be willing to sit down and compromise.

Discussion ensued regarding Resolution 02-83 and that the application complies with the Sanibel Plan.
The motion to adopt Resolution 02-83 passed with a vote of four to one with Mayor Theiss, Vice Mayor Walsh, Councilman Harrity and Councilmember Workman voting in favor of the Resolution and Councilman Brown voting in opposition.

Council recessed at 11:30

Council reconvened at 11:44.

Request for a Proclamation by Lee County to be presented at the September 11th memorial service.
Discussion ensued regarding the Lee County 9-11 Event.

Councilmember Workman made a motion, seconded by Councilmember Harrity, to approve the 9-11 Lee County Proclamation.

Discussion ensued regarding statements in the Proclamation and that in the fourth whereas, it should state that freedom in our Country and abroad, the name of the Proclamation as Patriots Remembered Day and whether or not the title was nationally accepted and that there were people from abroad that last their lives that day, not just patriots, grammatical errors within the Proclamation and also that the 9-11 terrorist attacks were one of many tragic events in U.S. History.

The motion failed by a three to two vote with Mayor Theiss, Vice Mayor Walsh and Councilman Brown voting in opposition and Councilman Harrity and Councilmember Workman voting in favor.

Ms. Zimomra asked for clarification whether Council wanted staff to do anything beyond the current discussion.

Council agreed that the City would prepare it's own Proclamation and let the County know that we appreciate their efforts, but that the City of Sanibel prefers to write it's own Proclamation. Council further recommended that the City's Proclamation be brought back to Council at the first regular meeting of September for approval.

Attendance at the Industry Appreciation Luncheon.
Discussion ensued regarding which members of Council would attend the luncheon and making available open seats to go to the Planning Commission.

COMMITTEES, BOARDS & COMMISSION
RESOLUTION 02-85 CERTIFYING THE RESULTS OF THE EMPLOYEE ELECTION FOR THE GENERAL EMPLOYEES PENSION BOARD; AND PROVIDING AN EFFECTIVE DATE.
Ms. Zimomra read the title of Resolution 02-85.

CITY OF SANIBEL
RESOLUTION NO. 02-83

A RESOLUTION APPROVING THE CONSTRUCTION OF 149 FEET MONOPOLE ABOVE GROUND LEVEL (AGL), TO ATTACH ANTENNAS TO THE MONOPOLE, CONSTRUCT EQUIPMENT SHELTER TO HOUSE THE BASE TRANSCEIVER STATION (BTS), VIA CABLES TO CONNECT THE BTS TO THE ANTENNA AND TO FENCE IN AN AREA 50' X 50' TO CONTAIN THE EQUIPMENT ON THE CITY-OWNED LAND AT THE WULFERT ROAD WASTEWATER TREATMENT PLANT, AT 2222 WULFERT ROAD. THE REQUEST IS BEING PROCESSED UNDER THE PROVISION OF LAND DEVELOPMENT CODE SECTION 78-7, CITY EXEMPTED. THE APPLICATION WAS FILED BY MASTEC NORTH AMERICA, INC., ON BEHALF OF VERIZON WIRELESS PERSONAL COMMUNICATIONS, LP., D.B.A. VERIZON WIRELESS

WHEREAS, Application 01-867DP was filed by Mastec North America, Inc., on behalf of Verizon Wireless Personal Communications, LP, d/b/a Verizon Wireless; and

WHEREAS, the City Council held a public hearing on April 16, 2002, said public hearing continued until August 7, 2002; and

WHEREAS, such public hearing was appropriately and legally noticed and at such public hearing the City Council took and considered such sworn testimony, evidence and/or arguments as was presented by or on behalf of the Applicant, and all interested parties appearing at and participating in such public hearing; and

WHEREAS, at the conclusion of the presentation of sworn testimony, evidence and/or arguments at the public hearing on August 7, 2002, the City Council closed the public hearing and continued the matter to its regular meeting of August 20, 2002, for purposes of making the City Council's final decision with regard to the Application;

NOW, THEREFORE, BE IT RESOLVED by the City Council of the City of Sanibel, Lee County, Florida:

SECTION 1. FINDINGS

The City Council hereby finds as follows:

(a) The Application was filed and processed in accordance with applicable City ordinances, rules and regulations.

(b) All persons wishing to provide sworn testimony, evidence and/or arguments with respect to the Application were provided an opportunity to do so during the public hearing process.

(c) Based upon the sworn testimony and evidence presented to the City Council and set forth in the record, the City Council finds that the application meets all required criteria in the City's Land Development Code relating to the location and development of the telecommunication facility applied for in the Application, and meets all other requirements and criteria of the City necessary for approval of the Application.

SECTION 2. APPROVAL OF APPLICATION

The Application filed by Mastec North America, Inc., on behalf of Verizon Wireless Personal Communications, LP, d/b/a Verizon Wireless, is hereby approved.

DULY PASSED AND ENACTED by the City Council of the City of Sanibel, Lee County, Florida, this 20th day of August, 2002.

AUTHENTICATION:

Mayor

City Clerk

APPROVED AS TO FORM: Kenneth B. Cuyler
City Attorney

8/21/02
Date

Vote of Council members:

Theiss	aye
Walsh	aye
Harrity	aye
Brown	nay
Workman	aye

Date filed with City Clerk: August 21, 2002

The motion failed by a 2-2 vote with Vice-Mayor Harrity and Councilman Jennings in opposition.

Discussion ensued regarding a staff analysis and no billing through Lee County in 2004.

Councilman Walsh made a motion, seconded by Councilmember Workman, to authorize and direct the staff to prepare such analysis and questions that they may have with respect to transferring the billing to the real estate tax bill in January 01, 2004 and to report back at the next meeting.

Public Comment:
None.

The motion passed unanimously.

NEW BUSINESS
RESOLUTION 03-036 ACCEPTING WASTEWATER COLLECTION AND TRANSMISSION SYSTEM EASEMENTS FROM SANIBEL PROPERTY OWNERS FOR THE SANIBEL SEWER SYSTEM EXPANSION PROJECT, PHASE 3; AUTHORIZING THE CITY MANAGER TO RECORD SAME IN THE PUBIC RECORDS OF LEE COUNTY, FLORIDA; AND PROVIDING AN EFFECTIVE DATE
Ms. Zimomra read the title of Resolution 03-036.

Councilman Walsh made a motion, seconded by Councilmember Workman, to adopt Resolution 03-036.

Public Comment:
None

The motion passed unanimously.

RESOLUTION 03-042 ACKNOWLEDGING THE INTENT OF VERIZON WIRELESS TO SUBMIT A NEW PETITION FOR A 120 FOOT COMMUNICATIONS TOWER AT THE LCEC SITE, LOCATED AT 4040 SANIBEL-CAPTIVA ROAD, SANIBEL, LEE COUNTY, FLORIDA; AND PROVIDING AN EFFECTIVE DATE.
Ms. Zimomra read the title of Resolution 03-042.

Councilman Walsh made a motion, seconded by Vice-Mayor Harrity, to adopt Resolution 03-042.

Councilman Walsh amended his motion, Vice-Mayor Harrity agreed to adopt Resolution 03-042, delete Section 3 and the authority to correct the address of the proposed site location.

Public Comment:
None

The motion passed unanimously.

CITY MANAGER'S REPORT
Survey results from Sanibel School fifth through eighth grade regarding parks and recreation.
Ms. Zimomra reviewed the survey results from Sanibel School fifth through eighth grade regarding parks and recreation.

Discussion ensued regarding how the survey was conducted.

Letter from Florida Department of State Division of Historical Resources regarding application for a grant for the Historical Village and Museum.
Ms. Zimomra spoke to the letter from Florida Department of State Division of Historical Resources regarding application for a grant for the Historical Village and Museum in which the City did not receive funding.

Changing notification procedures for property owners regarding building permitting.
Ms. Zimomra explained the homeowners as well as contractors would be notified when problems were found with building plans and/or permits.

Legislative Report from Poole, McKinley and Blosser.
Ms. Zimomra provided Council with a Legislative Report from Poole, McKinley and Blosser on the latest legislation affecting the City of Sanibel.

CITY ATTORNEY'S REPORT.
Consideration of Agreement for Special Counsel Legal Services with the Law Firm of Goodlette, Coleman and Johnson P. A. (to provide representation only in the event of absence or unavailability of the City Attorney)
Mr. Cuyler stated that there would be no retainer for the contract and that the firm would bill the City on an hourly basis should they be needed and the hourly rate would be $200 per hour.

Councilman Walsh made a motion, seconded by Councilmember Workman, to approve the agreement for Special Counsel Services with Goodlette, Coleman and Johnson P.A.

Discussion ensured regarding Section 6, travel time, expenses, meals and lodging and that the travel time within Lee & Collier County be reduced to a travel rate of $100 per hour and the rate at which travel time should be paid.

Public Comment:
Mr. Ted Tyson asked how much was paid for travel time for Ken Cuyler prior to his being hired by the City of Sanibel. Mr. Cuyler stated the rate was $185.00.

CITY OF SANIBEL

RESOLUTION 03-042

A RESOLUTION ACKNOWLEDGING THE INTENT OF VERIZON WIRELESS TO SUBMIT A NEW PETITION FOR A 120 FOOT COMMUNICATION TOWER AT THE LCEC SITE, LOCATED AT 5050 SANIBEL-CAPTIVA ROAD, SANIBEL, LEE COUNTY, FLORIDA; AND PROVIDING AN EFFECTIVE DATE

WHEREAS, Verizon Wireless Personal Communications, L. P., doing business as Verizon Wireless ("Verizon") applied for and was approved for a 149 foot communication tower on City-owned property located at 2222 Wulfert Road, City of Sanibel, commonly known as the Wulfert Point Wastewater Treatment Plant site; and

WHEREAS, the Sanctuary at Wulfert Point Community Association, Inc. has filed suit against Verizon and the City of Sanibel with regard to the approval of such communication tower site; and

WHEREAS, Verizon has indicated its intent to apply for City approval of a 120 foot communication tower at the LCEC site located at 5050 Sanibel-Captiva Road; and

WHEREAS, such petition will be reviewed and considered by the Planning Commission in accordance with the City's Land Development Code procedures since the site is not owned by the City of Sanibel and the petition is not City-exempt; and

WHEREAS, Verizon has requested a formal acknowledgement from the City Council that it is aware that a new petition is being filed and that the Council is aware that Verizon intends to seek approval of a 120 foot communication tower at the LCEC site and, if such approval is granted by the City, and thereafter becomes final, Verizon intends to withdraw, release, and abandon the approval granted at the Wulfert Point Wastewater Treatment Plant site; and

WHEREAS, the City Attorney has advised the City Council that such acknowledgement by the City Council is appropriate, but that no further comments, acknowledgements, consents or approvals are appropriate since this petition must proceed through the normal public hearing process and all representatives of the City must remain unbiased and impartial with regard to the results of the petition; and

WHEREAS, Verizon has requested that the new petition be processed by the City as expeditiously as reasonably possible while the pending litigation is abated or stayed to determine the results of the new Verizon petition.

NOW, THEREFORE, BE IT RESOLVED by the City Council of the City of Sanibel, Lee County, Florida that:

SECTION 1. The Sanibel City Council has been advised, and hereby acknowledges, that it is the intent of Verizon to submit a new petition for the approval of a 120-foot communication tower at the LCEC site located at 5050 Sanibel-Captiva Road. The City Council also acknowledges the intent of Verizon, in the event that such new communication tower is approved by the City and such approval becomes final, for Verizon to construct a 120 foot communication tower at the LCEC site and to abandon, withdraw from and release any and all approvals previously granted by the City to Verizon for construction of a communication tower at the Wulfert Point Wastewater Treatment Plant site.

SECTION 2. The City Staff is hereby directed to process the Verizon petition for the LCEC site as expeditiously as reasonably possible.

SECTION 3. Effective date.
This resolution shall take effect immediately upon adoption.

DULY PASSED AND ENACTED by the Council of the City of Sanibel, Lee County, Florida, this 20th day of May, 2003.

AUTHENTICATION:

Mayor

City Clerk

APPROVED AS TO FORM: Kenneth B. Cuff
City Attorney

5/29/03
Date

Vote of Council members:

Brown	excused
Harrity	yea
Jennings	yea
Walsh	yea
Workman	yea

Date filed with City Clerk: May 29, 2003

SHOULD REFERENCE THE FLORIDA BUILDING CODE AND TO ADD CLARIFICATION THAT THE CITY'S FLOOD ELEVATION IS THE FEDERAL FLOOD INSURANCE RATE MAP; AND

AMENDING CHAPTER 126. ZONING, ARTICLE XIV. SUPPLEMENTAL DISTRICT REGULATIONS, DIVISION 12. MAIL RECEPTACLES, SECTION 126-1220 "REMOVAL OR RELOCATION", TO REMOVE A REFERENCE TO A COMPLIANCE DATE THAT HAS ALREADY PASSED; AND

AMENDING CHAPTER 126. ZONING, ARTICLE XIV. PLANNED UNIT DEVELOPMENT, DIVISION 2. WULFERT POINT PROPERTY, SECTION 126-1451. "PERMITTED USES" AND SECTION 126-1452 "REQUIRED CONDITIONS", TO REMOVE TEMPORARY SALES OFFICES IN A MODEL HOME AS A PERMITTED USE, SINCE THE REQUIRED CONDITIONS FOR THAT USE PROHIBITS THE ISSUANCE OR RENEWAL OF PERMITS PAST OCTOBER 31, 1997 AND TO DELETE THE STANDARDS FOR THAT USE; AND

AMENDING CHAPTER 126. ZONING, ARTICLE XVII. TELECOMMUNICATIONS DEVICES, DIVISION 2. MASTER PLAN, SECTION 126-1536 "TELECOMMUNICATIONS TOLERANT AREAS", TO UPDATE THE NAMES OF SITES LISTED IN SUBSECTION (b) AS TELECOMMUNICATIONS TOLERANT AREAS AND TO CORRECT AN INCORRECT REFERENCE IN SUBSECTION (f) TO SUBSECTION (b);

PROVIDING FOR CODIFICATION; PROVIDING FOR CONFLICT AND SEVERANCE; AND PROVIDING AN EFFECTIVE DATE.

Ms. Zimomra read the title of Ordinance 03-014.

Council scheduled the Second Reading and Public Hearing for 9 a. m. on September 16, 2003.

Planning Commission Report:

Mr. John Dillon gave a brief report on the August 13, 2003 meeting.

CAUSEWAY ISSUES:

Update from staff regarding Causeway meetings.

Mr. Isom called Council's attention to the memo in Council packet of the September 03 meeting. He stated the number of test piles was reduced to 7 from 10 and the test pile program had been delayed. He further stated that the City would be notified before the starting date. He also noted that Lee County had scheduled a public meeting for September 23 at SCA from 5:00 p. m until 7:00 p. m.

Discussion ensued regarding the 4 foot bike path and that it would be stripped, but not designated as a bike path, recreational area and bike path on the left leaving Sanibel would be impacted during construction, replacement bridges not new bridges, letter written to Congressman Goss' office regarding an e-mail of the Coast Guard ruling of opening the drawbridge on demand and creating an independent bridge authority.

Ms. Zimomra recalled Council's direction regarding an advertisement in the paper, mailing of post cards and an editorial in the News Press regarding Council's position. She gave Council an overview of the following dates for Causeway meetings:

AMENDING CHAPTER 126. ZONING. ARTICLE V. NONCONFORMANCES. DIVISION 2. USES, SECTION 126-152 "EXCEPTIONS AND PROHIBITIONS", TO RENUMBER A PROVISION GROUPED WITH NONCONFORMING RESORT HOUSING USES BUT PERTAINING TO REPLACEMENT OF EXISTING OUTDOOR LIGHTING FIXTURES; AND

AMENDING CHAPTER 126. ZONING, ARTICLE XII. RESORT HOUSING DISTRICT, SECTION 126-634 "PERMITTED USES", TO ADD A NOTATION, THAT WHITECAPS IS ALLOWED RENTALS OF 7 DAYS OR MORE, TO THE LIST OF RESIDENTIAL DEVELOPMENTS, LOCATED IN THE RESORT HOUSING DISTRICT, THAT ARE PROHIBITED FROM RESORT HOUSING USE AND TO ADD 4 SINGLE FAMILY DWELLINGS, RECENTLY BUILT OR CURRENTLY UNDER CONSTRUCTION, TO THAT LIST; AND

AMENDING CHAPTER 126. ZONING, ARTICLE XII. RESORT HOUSING DISTRICT, SECTION 126-635 "DEVELOPMENT REGULATIONS", TO CORRECT REFERENCES THAT WERE CORRECTLY STATED AS THE STATE DEPARTMENT OF ENVIRONMENTAL PROTECTION, BUT NOW SHOULD REFERENCE THE FLORIDA BUILDING CODE AND TO ADD CLARIFICATION THAT THE CITY'S FLOOD ELEVATION IS THE FEDERAL FLOOD INSURANCE RATE MAP; AND

AMENDING CHAPTER 126. ZONING, ARTICLE XIV. SUPPLEMENTAL DISTRICT REGULATIONS, DIVISION 12. MAIL RECEPTACLES, SECTION 126-1220 "REMOVAL OR RELOCATION", TO REMOVE A REFERENCE TO A COMPLIANCE DATE THAT HAS ALREADY PASSED; AND

AMENDING CHAPTER 126. ZONING, ARTICLE XIV. PLANNED UNIT DEVELOPMENT, DIVISION 2. WULFERT POINT PROPERTY, SECTION 126-1451. "PERMITTED USES" AND SECTION 126-1452 "REQUIRED CONDITIONS", TO REMOVE TEMPORARY SALES OFFICES IN A MODEL HOME AS A PERMITTED USE, SINCE THE REQUIRED CONDITIONS FOR THAT USE PROHIBITS THE ISSUANCE OR RENEWAL OF PERMITS PAST OCTOBER 31, 1997 AND TO DELETE THE STANDARDS FOR THAT USE; AND

AMENDING CHAPTER 126. ZONING, ARTICLE XVII. TELECOMMUNICATIONS DEVICES, DIVISION 2. MASTER PLAN, SECTION 126-1536 "TELECOMMUNICATIONS TOLERANT AREAS", TO UPDATE THE NAMES OF SITES LISTED IN SUBSECTION (b) AS TELECOMMUNICATIONS TOLERANT AREAS AND TO CORRECT AN INCORRECT REFERENCE IN SUBSECTION (f) TO SUBSECTION (b); PROVIDING FOR CODIFICATION; PROVIDING FOR CONFLICT AND SEVERANCE; AND PROVIDING AN EFFECTIVE DATE.

Mr. Gates Castle, Acting City Manager read the title of Ordinance 03-014.

Councilman Walsh made a motion, seconded by Councilmember Workman, to adopt Ordinance 03-014.

Councilman Walsh explained that Ordinance 03-014 was a housekeeping item.

Public Comment:
None.

The motion passed unanimously.

Planning Commission Annual Review of The Land Development Code Permitting Process:

Mr. Ken Pfalzer, Deputy Planning Director gave a brief report of the Planning Commission annual review of the Land Development Code.

Discussion ensued regarding the ability of a builder to construct a telecommunication tower in the approved area by short form, accessory structures,

Councilman Walsh made a motion, seconded by Councilmember Workman, to except the report and direct staff to prepare appropriate recommendations.

CAUSEWAY ISSUES:

Update from staff regarding Causeway meetings.

Mr. Isom stated he had nothing to report, but Paul Wingard and Chris Cella would be available this afternoon

Discussion ensued regarding the County seeing no need for a handrail installed on the seawall and County investigating the need.

Update from Paul Wingard, Deputy Director of Lee County Department of Transportation regarding Causeway issues.

Vice Mayor Harrity stated this topic would be heard when Council re-convenes at 1:00 p.m.

CONSENT AGENDA:

Councilman Walsh made a motion, seconded by Councilmember Workman, to adopt Consent Agenda items (b) &(c).

b. Approval of purchase of 2 ½ ton extended cab pick-up trucks 4x4's, 2 extended cab pick-up trucks 4x2's and 1 mid-size utility 4x4 and approval for vehicles to be liquidated. (Police Department)

c. Rejection bid received for ADA Improvements and direct staff to re-bid project.

a. RESOLUTION 03-084 OPPOSING THE REQUEST BY WAL-MART STORES (APPLICATION NO. DCI 2003-00036) FOR A DEVIATION TO CONTROLLED ACCESS RESOLUTION 930110112 FOR A RIGHT-IN/RIGHT-OUT ACCESS ABOUT 700' WEST OF THE PINE RISGE/SUMMERLIN ROADS INTERSECTION AND SUPPORTING THE COUNTY'S PROPOSED CHANGE TO THE MEDIAN CROSSING AT THE SAFETY/SUMMERLIN ROADS INTERSECTION TO A DIRECTIONAL MEDIAN; AND PROVIDING AN EFFECTIVE DATE.

Mr. Gates Castle, Acting City Manager read the title of 03-084.
Councilman Walsh made a motion, seconded by Councilmember Workman, to adopt Resolution 03-084.

CITY OF SANIBEL

ORDINANCE NO. 03- 014

AN ORDINANCE AMENDING THE SANIBEL CODE, PART II, SUBPART B. LAND DEVELOPMENT CODE,

AMENDING CHAPTER 94. FLOODS, ARTICLE I. IN GENERAL, SECTION 94-1 "DEFINITIONS", BY REPLACING THE DEFINITION OF RECREATIONAL VEHICLE IN THIS SECTION WITH THE DEFINITION OF RECREATIONAL VEHICLE FOUND IN CHAPTER 78. GENERAL PROVISIONS, SECTION 78.1 RULES OF CONSTRUCTION AND DEFINITIONS; AND

AMENDING CHAPTER 106. SIGNS, ARTICLE II. ADMINISTRATION AND ENFORCEMENT, DIVISION 3. NONCONFORMING SIGNS, SECTION 106-71. "TIME FOR COMPLIANCE", TO REMOVE REFERENCES TO COMPLIANCE DATES THAT HAVE ALREADY PASSED AND TO ADD A DATE FOR COMPLIANCE THAT IS NOT LISTED, BUT THAT CROSS-REFERENCES ANOTHER SECTION OF THE CODE; AND

AMENDING CHAPTER 126. ZONING, ARTICLE IV. NONCONFORMANCES, DIVISION 1. GENERALLY, SECTION 126-133 "LAND WITHOUT PRINCIPAL BUILDING", TO REMOVE A REFERENCE TO A COMPLIANCE DATE THAT HAS ALREADY PASSED; AND

AMENDING CHAPTER 126. ZONING. ARTICLE V. NONCONFORMANCES. DIVISION 2. USES, SECTION 126-152 "EXCEPTIONS AND PROHIBITIONS", TO RENUMBER A PROVISION GROUPED WITH NONCONFORMING RESORT HOUSING USES BUT PERTAINING TO REPLACEMENT OF EXISTING OUTDOOR LIGHTING FIXTURES; AND

AMENDING CHAPTER 126. ZONING, ARTICLE XII. RESORT HOUSING DISTRICT, SECTION 126-634 "PERMITTED USES", TO ADD A NOTATION, THAT WHITECAPS IS ALLOWED RENTALS OF 7 DAYS OR MORE, TO THE LIST OF RESIDENTIAL DEVELOPMENTS, LOCATED IN THE RESORT HOUSING DISTRICT, THAT ARE PROHIBITED FROM RESORT HOUSING USE AND TO ADD 4 SINGLE FAMILY DWELLINGS, RECENTLY BUILT OR CURRENTLY UNDER CONSTRUCTION, TO THAT LIST; AND

AMENDING CHAPTER 126. ZONING, ARTICLE XII. RESORT HOUSING DISTRICT, SECTION 126-635 "DEVELOPMENT REGULATIONS", TO CORRECT REFERENCES THAT WERE CORRECTLY STATED AS THE STATE DEPARTMENT OF ENVIRONMENTAL PROTECTION, BUT NOW SHOULD REFERENCE THE FLORIDA BUILDING CODE AND TO ADD CLARIFICATION THAT THE CITY'S FLOOD ELEVATION IS THE FEDERAL FLOOD INSURANCE RATE MAP; AND

AMENDING CHAPTER 126. ZONING, ARTICLE XIV. SUPPLEMENTAL DISTRICT REGULATIONS, DIVISION 12. MAIL RECEPTACLES, SECTION 126-1220 "REMOVAL OR RELOCATION", TO REMOVE A REFERENCE TO A COMPLIANCE DATE THAT HAS ALREADY PASSED; AND

AMENDING CHAPTER 126. ZONING, ARTICLE XIV. PLANNED UNIT DEVELOPMENT, DIVISION 2. WULFERT POINT PROPERTY, SECTION 126-1451. "PERMITTED USES" AND SECTION 126-1452 "REQUIRED CONDITIONS", TO REMOVE TEMPORARY SALES OFFICES IN A MODEL HOME AS A PERMITTED USE, SINCE THE REQUIRED CONDITIONS FOR THAT USE PROHIBITS THE ISSUANCE OR RENEWAL OF PERMITS PAST OCTOBER 31, 1997 AND TO DELETE THE STANDARDS FOR THAT USE; AND

AMENDING CHAPTER 126. ZONING, ARTICLE XVII. TELECOMMUNICATIONS DEVICES, DIVISION 2. MASTER PLAN, SECTION 126-1536 "TELECOMMUNICATIONS TOLERANT AREAS", TO UPDATE THE NAMES OF SITES LISTED IN SUBSECTION (b) AS TELECOMMUNICATIONS TOLERANT AREAS AND TO CORRECT AN INCORRECT REFERENCE IN SUBSECTION (f) TO SUBSECTION (b) ;

PROVIDING FOR CODIFICATION; PROVIDING FOR CONFLICT AND SEVERANCE; AND PROVIDING AN EFFECTIVE DATE.

WHEREAS, the City of Sanibel has adopted a Land Development Code; and

WHEREAS, from time to time, there is a need to resolve internal inconsistencies, correct what have become incorrect references, and to delete compliance dates that have past; and

WHEREAS, a procedure has been established to revise and amend the Land Development Code in a manner consistent with the *Sanibel Plan*; and

WHEREAS, such revisions have been referred to the Planning Commission for a recommendation as to the consistency of that Amendment with the *Sanibel Plan;*

WHEREAS, the City Council deems it necessary to make such revisions to the Land Development Code, as contained in this ordinance; and

WHEREAS, all required public notices and public hearings for such amendment have been properly given and held; and

NOW, THEREFORE, BE IT ORDAINED by the Council of the City of Sanibel, Lee County, Florida:

SECTION 1. The Code of Ordinances of the City of Sanibel, Chapter 94. Floods, Article I. In General, Section 94-1. "Definitions", is hereby amended, with underlining indicating additions and ~~strikethroughs~~ indicating deletions, as follows:

Section. 94-1. Definitions.

The following words, terms and phrases when used in this chapter, shall have the meanings ascribed to them in this section, except where the context clearly indicates a different meaning:

. . .

Recreational vehicle means ~~a vehicle which is~~:

~~(1) Built on a single chassis;~~

~~(2) Four hundred square feet or less when measured at the largest horizontal projection;~~

~~(3) Designed to be self-propelled or permanently towable by a light duty truck; and~~

~~(4) Designed primarily not for use as a permanent dwelling but as temporary living quarters for recreational, camping, travel, or seasonal use.~~

the same as provided in F.S. § 320.01. However, the terms "temporary living quarters" and "seasonal or temporary living quarters" as used in F.S. § 320.01 shall, in reference to recreational vehicles placed in recreational vehicle parks, relate to the period of time the recreational vehicle is occupied as a living quarter during each year and not to the period of time it is located in the recreational vehicle park

. . .

SECTION 2. The Code of Ordinances of the City of Sanibel, Chapter 106. Signs, Article II. Administration and enforcement, Division 3. Nonconforming signs, Section 106-71. "Time for compliance", is hereby amended, with underlining indicating additions and ~~strikethroughs~~ indicating deletions, as follows:

Section 106-71. Time for compliance

All signs shall be brought into compliance with the standards of this chapter according to the schedule which follows:

(1) *Temporary signs*. Any temporary sign which was lawful when erected, but is not in compliance with the requirements of this chapter, shall be removed or made lawful hereunder ~~within 90 days after the effective date of the ordinance from which this chapter is derived~~.

(2) *Exempted signs.* Any sign which was lawful when erected under the provisions of former section 106-3, but is not in compliance with the requirements of this chapter, shall be removed or made lawful hereunder ~~within one year after the effective date of the ordinance from which this chapter is derived~~.

(3) *Permanent accessory signs.* Any sign which was erected and is being maintained in compliance with a sign permit issued by the city prior to the effective date of the ordinance from which this section is derived, including signs with internal illumination, and which as a result of adoption of these regulations is not in compliance with this chapter, shall be treated under this chapter as a nonconforming sign.

(4) *Other nonconforming signs.* Any other nonconforming sign shall be brought in compliance with this chapter upon any alternation, but not routine maintenance, of the sign. However, any sign which is nonconforming solely as to illumination standards under this section or section 126-997, shall be brought into compliance within the time for compliance set forth in section 126-997 et seq <u>(by January 1, 2015).</u>

(5) *Prohibited signs.* Any sign prohibited by this chapter except a sign for which a valid city permit exists or a sign which was exempted under section 106-3 shall be removed ~~within 30 days after the effective date of the ordinance from which this section is derived~~.

SECTION 3. The Code of Ordinances of the City of Sanibel, Chapter 126. Zoning, Article IV. Nonconformances, Division 1. Generally, Section 126-133. "Land without principal building", is hereby amended, with <u>underlining</u> indicating additions and ~~strikethroughs~~ indicating deletions, as follows:

Section 126-133. Land without principal building.

Any use of land without a principal building which does not conform to the requirements of this land development code shall be made to comply with this land development code ~~within three years from the date of its adoption~~.

SECTION 4. The Code of Ordinances of the City of Sanibel, Chapter 126. Zoning, Article XII. Resort Housing District, Section 126-634 "Permitted uses", is hereby amended, with <u>underlining</u> indicating additions and ~~strikethroughs~~ indicating deletions, as follows:

Section 126-634. Permitted uses.

Within the resort housing district, the permitted uses of lands are controlled by the regulations applicable to the zone district in which such lands are otherwise located. However, in addition, such lands in the resort housing district may be used for resort housing in accordance with the requirements and limitations of this article.

Certain properties located in the resort housing district were developed or subdivided pursuant to city permits which required rental restrictions prohibiting resort housing use of the development. Such restrictions against resort housing use were required because the developments did not comply with recreation open space requirements for resort housing use or exceeded the average occupancy rate permitted for resort housing use. A listing of residential developments, (including single family dwellings identified by address) located in the resort housing district, that are prohibited from resort housing use follows:

Address	*Name of Development*
401-445 Bella Vista Way	Colony Beach Estates
. . .	. . .
1390-1398 Middle Gulf Drive	Sea Pines Condominium
1470 Middle Gulf Drive	Single Family Dwelling
1480 Middle Gulf Drive	Single Family Dwelling
1490 Middle Gulf Drive	Single Family Dwelling
1500 Middle Gulf Drive	Single Family Dwelling
1508 Middle Gulf Drive	Single Family Dwelling
. . .	. . .
2665 West Gulf Drive	Bougainvillea Condominium
2877 West Gulf Drive	White Caps South Condominium Restriction allows rentals for 7 days or more
2915 West Gulf Drive	Villas of Sanibel Condominium
. . .	. . .

Properties in the resort housing district, that are developed or redeveloped for residential use, but are prohibited against use as resort housing, will be added to the preceding list as a ministerial function and not as an amendment.

For lands in the resort housing district which are also located in the gulf beach ridge zone, resort housing accessory commercial uses are allowed as conditional uses, subject to approval in accordance with the requirements of articles II and IV of this chapter.

SECTION 5. The Code of Ordinances of the City of Sanibel, Chapter 126. Zoning, Article XII. Resort Housing District, Section 126-635 "Development Regulations", is hereby amended, with underlining indicating additions and ~~strikethroughs~~ indicating deletions, as follows:

Section 126-635. Development regulations.

Lands in the resort housing district shall be subject to all of the regulations for the zone district in which they are otherwise located. Use of such lands in the resort housing district shall be subject to all conditions, limitations, and regulations contained in this land development code, the same as if such lands were not included in the resort housing district. In addition, the following requirements shall apply to all lands within the resort housing district:

. . .

(4) Principal residential buildings shall be permitted to exceed 45 feet above mean sea level only where both of the following circumstances exist:

a. The buildings are located, in whole or in part, seaward of the coastal construction control line as established by the state department of environmental protection in 1991; and

b. The flood elevation required by the Florida Building Code ~~state department of environmental protection~~ is higher than the base flood elevation required by the city.

In such case, the buildings shall be permitted to exceed 45 feet mean sea level by no more than the amount by which the flood elevation required by the Florida Building Code ~~state department of environmental protection base flood elevation~~ exceeds the base flood elevation required by the city's adopted Flood Insurance Rate Map.

SECTION 6. The Code of Ordinances of the City of Sanibel, Chapter 126. Zoning, Article XIV. Supplemental District Regulations, Division 12. Mail Receptacles Section 126-1220. "Removal or relocation", is hereby amended, with underlining indicating additions and ~~strikethroughs~~ indicating deletions, as follows:

Section. 126-1220. Removal or relocation.

The city manager is authorized and directed to require the removal, relocation or reconfiguration of all or any part of any mail receptacle or supporting structure which does not meet the requirements of this division; ~~provided, however, that no mail receptacle within the public right-of-way of Periwinkle Way or Causeway Road on the~~

~~effective date of the ordinance from which this land development code is derived shall be required to be completely removed from the right-of-way until on or after October 1, 1986, or until a development permit is obtained for further development on the lot or parcel in question, whichever occurs first~~. Any decision of the city manager under this section may be appealed to the city council within 15 days thereafter.

SECTION 7. The Code of Ordinances of the City of Sanibel, Chapter 126. Zoning, Article XIV. Planned Unit Development, Division 2. Wulfert Point Property, Section 126-1451 "Permitted uses" and Section 126-1452 "Required conditions", is hereby amended, with underlining indicating additions and ~~strikethroughs~~ indicating deletions, as follows:

Section. 126-1451. Permitted uses.

(a) *Primary intended uses.* Primary intended uses for the property described in this division shall be as follows:

(1) For the lowland wetlands, upland wetlands and mid-island ridge ecological zones:

a. Single-family dwellings, including zero-lot line villas.
b. Duplexes, including zero-lot line duplex dwelling units.
c. Multifamily dwelling units, in structures containing not more than six dwelling units each.
d. Occupancy of a dwelling unit by one family.
e. Preservation use.

(2) For the Mangrove forest ecological zone:

Preservation use.

(b) *Other permitted uses.* Other permitted uses for the property described in this division shall be as follows:

(1) For all ecological zones:

a. Passive recreation and conservation uses which include uses that have a minimum impact on the land and have little or no ecological impact and result in conservation of the area, such as, but not limited to, fishing, shelling, hiking, birding, picnicking and sunbathing.

~~b. Temporary sales offices in model homes.~~
b.~~c.~~Wastewater treatment facilities.
c.~~d.~~Public utilities and facilities.
d.~~e.~~Golf courses, including cart paths and golf practice range

. . .

Section. 126-1452. Required conditions.

. . .

~~(8) Temporary sales offices in model homes shall be permitted only in accordance with the following conditions:~~

~~a. Temporary sales offices in model homes are limited to single family residences fronting on Troon Court (lots 49 through 59) and to one multifamily unit in each separate multifamily phase, project or condominium association, subject to the following requirements:~~

~~1. Permits for temporary sales offices in model homes may be issued by the city manager for a period not to exceed one year and on further application, such permits may be extended, with or without additional standards and conditions required, for additional one year periods, for good cause shown; however, no permit for a temporary sales office in a model home may be issued or renewed so as to extend past October 31, 1997.~~

~~i. The creation of a land use by temporary use permit is hereby declared to be a limited license vesting no rights in the owner of land or operator of the temporary use to conduct the use in any manner other than specifically authorized by such permit, and all rights incident to such use shall terminate upon the expiration of the temporary use permit.~~

~~ii. Upon expiration of a temporary use permit, the use shall abate, any structure erected in connection therewith shall be removed, and, as far as practicable, the site shall be returned to its original condition or converted to a permitted use in compliance with all of the requirements of this land development code and the Sanibel Plan.~~

~~iii. Where deemed appropriate, the city manager may require such guarantees as it deems sufficient to cause the abatement or removal of the use and restoration of the site.~~

~~2. Temporary sales offices in model homes may only be used for the original sale of dwelling units, either existing or to be constructed, in The Sanctuary at Wulfert Point. Temporary sales offices shall not be used for:~~

~~i. Construction offices;~~

~~ii. Rentals;~~

~~iii. Promoting resales of condominium units, timeshare estates, dwelling units, or lots;~~

~~iv. Promoting sales of condominium units, timeshare estates, dwelling units or lots which are not in the Sanctuary at Wulfert Point;~~

~~v. Any other commercial activity not specifically authorized:~~

~~3. A model home used as a sales office shall be designed and constructed as a dwelling unit with no structural or site alterations.~~

~~4. No additional on site parking spaces are required for a sales office in a model home. However, for each sales office in a single family dwelling unit, a minimum of two additional parking spaces shall be provided at the site of the temporary real estate office in a mobile home, located on lot 59, in addition to the ten parking spaces required for that use, or in another location acceptable to the city manager.~~

~~5. Temporary sales offices in model homes shall be used as such only during the hours of 12:00 noon to 6:00 p.m. on Sundays and 9:00 a.m. to 6:00 p.m. on all other days. A sales office in a model home may not be used for any activity which interferes with the normal, quiet, and comfortable use and enjoyment of adjacent dwelling units. All activities shall be conducted inside the model home so as not to be noticeable from the outside, except for permitted street graphics.~~

~~b. Additional temporary sales offices in model homes are permitted in other single family residences (not fronting on Troon Court) and in duplex units in accordance with temporary use permit procedures and requirements of this land development code.~~

~~c. Excluding sales offices in multifamily model units, there shall never be any more than six sales offices in model homes at one time in this planned unit development~~

SECTION 8. The Code of Ordinances of the City of Sanibel, Chapter 126. Zoning, Article XVII. Telecommunications Devices, Division 2. Master Plan, Section 126-1536 "Telecommunications tolerant areas", is hereby amended, with underlining indicating additions and ~~strikethroughs~~ indicating deletions, as follows:

Section. 126-1536. Telecommunications tolerant areas.

(a) To assist the providers in establishing their service, certain areas of the city have been designated as telecommunications tolerant areas. These areas . . . .

(b) The areas considered telecommunications tolerant are:

(1) City public works maintenance yard . . .

(2) Donax Street wastewater ~~treatment plant~~ reclamation facility (930 Donax Street)
(3) Wulfert Road advanced wastewater ~~treatment plant~~ reclamation facility (2222 Wulfert Road)
(4) The site of the existing ~~Wireless One~~ AT&T tower (701 Opre Ave.)
(5) Sprint Florida telephone switching office . . . .
(6) The Sanibel School . . . .
(7) Recreation field next to the Sanibel School.
(8) J. N. "Ding" Darling National Wildlife Refuge maintenance yard . . . .
(9) Lee County E~~e~~lectrical C~~c~~ooperative Substation . . . .
(10) Lee County E~~e~~lectrical C~~c~~ooperative Pine Island to Sanibel power transmission line support poles.
(11) Island Water Association (IWA) reverse osmosis plant . . . .
(12) Sanibel Fire ~~Control~~ and Rescue District station (5171 Sanibel-Captiva Road).
(13) IWA water tank . . . .

(c) It is the city's policy to encourage any new tall (up to 149 feet above ground level) antenna support structures to locate on the city-owned parcels identified as areas (1) to (4) in subsection (b) of this section. . . . .

(d) In any of the areas listed in subsection (b) of this section, no public hearing will be necessary to obtain a permit to attach an antenna onto an existing structure if no . . .

(e) In areas (1) to (5) in subsection (b) of this section, new antenna support structures up to a maximum height of 149 feet may be permitted, following the permitting procedures outlined in the land development code.

(f) In areas (~~1~~ 6) to (11) in subsection (b) of this section, antenna support structures no taller than 120 feet above the ground are allowed.

(g) In areas (12) and (13) in subsection (b) of this section, antenna support structures no taller than 85 feet above the ground are allowed.

(h) For all the telecommunications tolerant areas . . . .

. . .

SECTION 9. Codification.

This ordinance shall be deemed an amendment to the Code of Ordinances of the City of Sanibel and Sections 94-1, 106-71, 126-133, 126-152, 126-634, 126-635, 126-1220, 126-1451, 126-1452 and 126-1536 of Sanibel Code of Ordinances are hereby amended.

SECTION 10. Conflict.

All ordinances and parts of ordinances in conflict herewith shall be and the same are hereby repealed. If any part of this ordinance conflicts with any other part, it shall be severed and the remainder shall have full force and effect and be liberally construed.

SECTION 11. Severance.

If any section, subsection, sentence, clause, phrase or portion of this ordinance, or application hereof, is, for any reason, held invalid or unconstitutional by any court of competent jurisdiction, such portion or application shall be deemed a separate, distinct and independent provision and such holding shall not affect the validity of the remaining portion of application hereof.

SECTION 12. Effective date.

This ordinance shall take effect immediately upon adoption.

DULY PASSED AND ENACTED by the Council of the City of Sanibel, Lee County, Florida, this 16th day of September, 2003.

AUTHENTICATION: _____ _____
Mayor City Clerk

APPROVED AS TO FORM: _____ 8/22/03
City Attorney Date

First Reading: September 06, 2003
Publication Date: September 11, 2003
Second Reading: September 16, 2003

Vote of Council Members:

Brown	excused
Harrity	yea
Jennings	excused
Walsh	yea
Workman	yea

Date filed with the City Clerk: September 17, 2003

K:\legal\jkg\LEGAL\GEN PLNG ORDINANCES\Ordinance to Amend the LDC-Pfalzer-4-27-3.doc

The motion carried unanimously. Councilman Brown excused

h. Reject the bid received for the replacement of the HVAC system for MacKenzie Hall and Legal wing

Ms. Zimomra stated that the cost had escalated and staff was requesting a rejection of the bid.

Councilman Rothman noted that he would like to see the project go forward.

Gates Castle, Public Works Director stated he hoped there would be contractors looking for work that would provide a reasonable bid. He stated the plan of action would prioritize Mackenzie Hall for FY 2008 and the Legal and Police Departments for FY 2007.

Councilman Jennings made a motion, seconded by Vice Mayor Denham, to accept the recommendation to the rejecting the bid.

Councilman Rothman asked to amend the motion and include directing staff to continue to working toward get bids for the replacement of the HVAC system for MacKenzie Hall and the Legal Department.

Councilman Jennings and Vice Mayor Denham agreed.

Public Comment:
None.

The motion carried unanimously.

i. Approval to delay the implementation schedule for mandatory condominium recycling

Ms. Zimomra called Council's attention to the memorandum in the agenda packet regarding the timeline for implementation of mandatory condominium recycling.

Gates Castle, Public Works Director stated he was not ready to implement a mandatory recycling program for condominiums. He requested that Council allow the delay until August, 2006 when the garbage rates would come before Council for approval.

Councilman Rothman made a motion, seconded by Vice Mayor Denham, to accept the proposal.

Public Comment:
None.

The motion carried unanimously. Councilman Brown was excused.

k.. RESOLUTION 06-045 APPROVING A LEASE AGREEMENT BETWEEN THE CITY OF SANIBEL AND VERIZON WIRELESS PERSONAL COMMUNICATIONS, LP, d/b/a VERIZON WIRELESS; AND PROVIDING AN EFFECTIVE DATE

Ms. Zimomra read the title of Resolution 06-045.

Mr. Cuyler explained the following:

- Public hearing in August, 2002
- City Attorney issued an opinion
- Council approved Verizon application
- Petition of writ of certiorari
- Lower court ruled against The City of Sanibel

- Verizon appealed to 2nd district Court of Appeals and was overturned
- Court ruled against the petitioner
- Negotiations of lease in agenda packet

Discussion ensued regarding any thing the City could do to help mitigate the Sanctuary issues, Mr. Cuyler answered it was a consideration to lower the visual impacts of the tower, and Verizon suggested they would be willing to build a monopole that looks like a large flag pole and the antennas would fit on the inside of the monopole, he further stated that if Council wanted Verizon would be ready for discussion.

Janna Loda, representing Verizon spoke to the following:

- Monopole approved by Resolution 02-03 with a flush mounted antenna and met the requirements
- Flag pole design was proposed early
- Flag pole design EMS equipment could not be attached on the outside of the pole and a concern of an issue to attach to the flag pole design
- Flag pole is not a similar design – wider at the base and not visual seeing equipment

Jason Laskey, Verizon spoke to the following:

- Flag pole had a canister attachments were antenna not seen
- Verizon worked with Coconut Creek for a standard monopole replacement and City enabled the City to have better service

Mike Clementi, Verizon spoke to the following:

- Canister would not allow antenna to be attached on the outside
- Will take to the top 30 feet
- Attachments on stand offs on the outside
- Inside canister there was center structure and 8 inches to mount an antenna

Mr. Cuyler stated the lease written was for 149 feet top and would be Verizon's property and 140 to 130 feet would be the City's property.

Discussion ensued regarding having EMS to review the proposed pole, question if City or EMS equipment would work, Mr. Cuyler stated that Council could approve the lease and direct the staff to work with Verizon, Ms. Loda spoke to the need for prior approval to remain in place and replace the permit drawings, Mr. Cuyler stated it was the City's request to look at another pole, any type of equipment that the City could purchase, Mr. Cuyler stated that staff would purchase the correct equipment, Ms. Zimomra stated that safety services including Fire, EMS, City, and Sheriff's Department, Chief Tomlinson spoke to the current repeater location, and was to low making communications difficult. Mr. Cuyler stated there was a 5-year period for the lease, and the need for the new tower.

Vice Mayor Denham made a motion, seconded by Councilman Jennings, to adopt Resolution 06-045 subject only to a technical analysis by City staff for the best equipment.

Discussion ensued regarding City Council approval of any changes, any provision for aesthetic improvements, Ms. Loda spoke to Verizon on the cutting edge of technology and the specific network such as E-911 services, Mr. Cuyler stated that the industry was leery of putting provision that allows the dictation of new technology, color of pole would be a non-reflective flat gray, and Verizon filed for FAA lighting, but was to lower to be lighted.

Public Comment:
None.

The motion carried unanimously. Councilman Brown was excused.

RESOLUTION NO. 06-045

A RESOLUTION APPROVING A LEASE AGREEMENT BETWEEN THE CITY OF SANIBEL AND VERIZON WIRELESS PERSONAL COMMUNICATIONS, LP, d/b/a VERIZON WIRELESS; AND PROVIDING AN EFFECTIVE DATE.

WHEREAS, the City owns real property located at 2222 Wulfert Road, Sanibel, upon which is located, in part, the Wulfert Road Advanced Wastewater Reclamation Facilities (the "Wulfert Site"); and

WHEREAS, pursuant to Section 126-1536 of the Sanibel Land Development Code entitled "Telecommunications Tolerant Areas", the Wulfert Site has been designated as a Telecommunications Tolerant Area; and

WHEREAS, Verizon Wireless Personal Communications, LP, d/b/a Verizon Wireless ("Verizon") applied for and was granted approval in 2002 by the Sanibel City Council to construct a telecommunication tower to be placed at the Wulfert Site; and

WHEREAS, the City Council wishes to provide for the terms and conditions of the lease of City property located at 2222 Wulfert Road to Verizon in the form of the Lease Agreement, attached hereto and incorporated herein;

NOW, THEREFORE, BE IT RESOLVED by City Council of the City of Sanibel, Florida, that:

SECTION 1. The Lease Agreement between the City of Sanibel and Verizon, a copy of which is attached hereto as Exhibit "A" and incorporated herein, is hereby approved and the Mayor is hereby authorized to execute such Lease Agreement on behalf of the City of Sanibel.

SECTION 2. Effective date.

This resolution shall take effect immediately upon adoption.

DULY PASSED AND ENACTED by the Council of the City of Sanibel, Florida this 21st day of March, 2006.

AUTHENTICATION:

Carla B. Johnston, Mayor

Pamela Smith, City Clerk

APPROVED AS TO FORM: Kenneth B. Cuyler 3/14/06

Kenneth B. Cuyler, City Attorney Date

Vote of Council Members:

Johnston	yea
Denham	yea
Brown	excused
Jennings	yea
Rothman	yea

Date filed with City Clerk: March 22, 2006

EXHIBIT "A"

LEASE AGREEMENT
SITE: 68907 - Wulfert Road WWTP

THIS LEASE AGREEMENT ("Lease"), is made as of this ___ day of _____, 2006, by and between CITY OF SANIBEL, ("Owner"), and VERIZON WIRELESS PERSONAL COMMUNICATIONS LP dba VERIZON WIRELESS, a Delaware limited partnership ("Lessee").

In consideration of the premises and of the mutual obligations and agreements in this Lease, the parties agree as follows:

1. **OWNER'S PROPERTY.** Owner represents and warrants that Owner is the title holder of that certain real property and the improvements thereon commonly known as 2222 Wulfert Road, City of Sanibel, County of Lee, State of Florida ("Owner's Property"), described on the attached Exhibit "A".

2. **LEASE OF PORTION OF OWNER'S PROPERTY; EASEMENTS ACROSS OWNER'S PROPERTY.**

A. Owner hereby leases and demises to Lessee a portion of Owner's Property comprised of approximately 2,500 (50 x 50) square feet of land in the location shown and described on Exhibit "B" ("Leased Property"). Owner also grants and conveys to Lessee nonexclusive easements across the Owner's Property connecting the Leased Property with the nearest public right-of-way and public utility easement (as applicable), for (i) unrestricted vehicular and pedestrian access to the Leased Property and parking on Owner's Property, as needed to install, operate and maintain Lessee's communications facilities, seven (7) days a week, twenty-four (24) hours a day and (ii) installation, location, operation and maintenance of cable runs and utilities including, without limitation, telephone and electric utilities, all as shown and described on Exhibit "B". In the event any public utility is unable to use the aforementioned easement, Owner hereby agrees to grant an additional easement either to Lessee or to the public utility at no cost to Lessee. The Leased Property including, without limitation, the access, cable run and utility easements, may be surveyed by a licensed surveyor, at Lessee's expense. Such survey and/or construction drawings, which shall not vary in any material respect from the easements and Leased Property shown in Exhibit "B", shall then replace Exhibit "B" and become a part hereof.

B. The City of Sanibel is leasing the Leased Property in its proprietary capacity, however, nothing in this Lease shall be construed to prohibit or in any way restrict the City of Sanibel, in its capacity as a local government, from enforcing any and all applicable laws within the City of Sanibel relating to the maintenance, construction and use of Lessee's communications tower. Further, Lessee's compliance with all City of Sanibel conditions of approval set forth in the development permit for Lessee's communication tower (hereinafter referred to as the "Approval Conditions") shall be considered conditions and covenants by Lessee of this Lease, incorporated herein by reference and enforceable under the terms of this Lease, as well. If after issuance of the development permit, Lessee is not satisfied (in Lessee's sole discretion) with the Approval Conditions, then Lessee may elect to terminate this Lease at any time prior to beginning physical construction of the Tower. Once Lessee has begun physical

construction of the Tower, the foregoing right of termination shall be deemed waived.

3. **USE OF THE LEASED PROPERTY.** Lessee and its sublessees and/or licensees may use the Leased Property for the installation, removal, securing, repair, replacement, maintenance and operation of a monopole communications tower (the "Tower") not to exceed One Hundred Forty-Nine (149') feet in height, as measured from the top of the Tower structure and not appurtenances thereon, and associated communications facilities which may include personal communications service, cellular, paging, radio, cable, and other communications facilities comprised of, without limitation, antenna arrays, dishes, cables, wires, equipment shelters, buildings, electronics equipment, generators, fuel tank(s), fencing, utility transformers and lines, cable runs, grounding systems, accessories, all as may be modified, added to or substituted from time to time, to the extent permitted in the applicable City of Sanibel ordinances. The Tower shall be designed and constructed in accordance with City of Sanibel Ordinance No. 99-07, codified in the Sanibel Land Development Code as Article XVII, Divisions 1 – 4, Sections 126-1511 through 126-1599, and the Approval Conditions. The final design of the Tower shall be subject to Owner's review and approval (which approval shall not be unreasonably withheld, delayed or conditioned). Further, during the Feasibility Period, as hereinafter defined, and throughout the Lease term, as may be extended, Lessee and its sublessees and/or licensees shall have the right to conduct Feasibility Tests on the Leased Property and Owner's Property, at Lessee's (or sublessee's or licensee's) sole expense.

4. **RESERVED TOWER SPACE.**

A. Owner, subject to the terms and conditions herein, shall have a non-revocable, exclusive license for the use of that portion of the Tower extending from one hundred thirty (130) feet to one hundred forty (140) feet (the "Reserved Tower Space") for the purpose of installing and operating its emergency communications equipment. Lessee shall have the right to substitute an equal amount of space at a location acceptable to Owner (in Owner's sole discretion) to the extent Owner has not exercised its right to use the Reserved Tower Space, and Lessee needs the Reserved Tower Space for its own operations. The substituted tower space shall be considered the Reserved Tower Space from that point forward. Under no circumstances shall Owner license or sublease any portion of the Reserved Tower Space to third parties, except a sublease may be granted by Owner to another government entity for the sole purpose of operating Owner's emergency, governmental and/or public safety communications as could otherwise be conducted by Owner hereunder. Additionally, Owner may sublease a portion of the Reserved Tower Space to a non-governmental entity provided such entity is using equipment on the Tower solely for the purpose of operating Owner's emergency, governmental and/or public safety communications as could otherwise be conducted by Owner hereunder and for no commercial purposes whatsoever. No part of the Leased Property shall be utilized by

Owner for the placement of any necessary ground equipment without prior written consent of Lessee (which consent can be granted or denied in Lessee's sole discretion), and Owner shall use its contiguous property for the placement of any necessary equipment.

B. Conditions for Use by Owner of Tower. Owner's equipment shall have Lessee's prior written approval, such approval not to be unreasonably withheld, delayed or conditioned, and shall be in accordance with the standards and requirements of Lessee, and shall be done under the Lessee's supervision and shall be subject to Lessee's final written approval, such approval not to be unreasonably withheld, delayed or conditioned. Owner will be responsible for the cost of Owner's initial equipment ("Owner's Initial Equipment") and the installation of that approved Owner's Initial Equipment. The supervision, approval and other activities of Lessee under this Paragraph, however, shall not constitute the waiver of any term or condition of this Lease. Scheduling of any and all work on the Leased Property and/or Tower will be coordinated with Lessee. Any future maintenance or access necessitating access by Owner to the Leased Property and/or Tower must be coordinated with Lessee within a reasonable time not less than seventy-two (72) hours prior to work being done, except that such coordination period shall be reduced accordingly based on emergency circumstances. All of Owner's equipment mounted on the Tower must be attached securely to the Tower with approved mounts, hangers, and clamps as directed by Lessee. Failure to comply with the terms and conditions of this Paragraph shall be cause for immediate notification of an Event of Default by Owner, which shall occur pursuant to the provisions of Section 12 of this Lease. Any inspection or approval given or done by Lessee pursuant to this Lease is solely for its own benefit. Lessee shall have no liability or responsibility to the Owner or any third party as a result of any inspection or approval given by Lessee and Owner should not rely upon the same other than for the specific purposes set forth herein.

C. Approved Equipment. Any such approved equipment shall be set forth on Exhibit "D" attached hereto and incorporated herein. Owner shall be required to submit an application to Lessee on a form to be provided by Lessee. Grounds for denying approval shall include, but shall not be limited to, the potential for overstressing the Tower taking into account the present loading on the Tower and the anticipated additional loading by Lessee on the Tower. Lessee shall make its analysis of Owner's application based on best engineering and management practices, but Owner's application shall not be unreasonably denied, delayed or conditioned. Further, in the event that Owner's application is denied by Lessee, there shall be a presumption that any further equipment attached to the Tower by any party, including Lessee, will overstress the Tower and no further equipment shall be added by any party, including Lessee, until Lessee establishes that such additional equipment can be appropriately added without overstressing the Tower when Owner's equipment was denied. If Lessee approves of Owner's application but conditions its approval on Owner making certain Tower modifications in

order to avoid overstressing of the Tower, and Owner refuses to make such modifications, then Lessee or another user of the Tower shall be permitted to add equipment to the Tower if (i) the conditions of the immediately preceding sentence are satisfied or (ii) overstressing of the Tower would result from the additional equipment and Lessee or such other user is willing to make the necessary Tower modifications to avoid overstressing of the Tower. To the extent Owner's approved equipment has not been decided upon between the parties prior to the execution of this Lease, at such time as Owner's application is submitted and approved by Lessee, and signed by both parties, it will be attached as Exhibit "D" to all original copies of this Lease.

D. Maintenance of Owner's Equipment. All of Owner's equipment shall be purchased and installed at the expense of Owner, and all of Owner's equipment, including, but not limited to, Owner's Initial Equipment, must be kept and maintained by Owner at all times, at its expense, in a good state of repair and maintenance and in compliance with all applicable Rules and Regulations of the Federal Communications Commission, Federal Aviation Agency and all applicable codes and regulations of the municipality, county and state concerned. Under this Lease, Lessee assumes no responsibility for the licensing, operation, and/or maintenance of Owner's radio equipment. To the extent permitted by law, Owner shall defend, indemnify and save Lessee harmless from any claims or suits arising by reason of Owner's failure to so keep and maintain its equipment or to comply with such laws, rules or regulations.

E. Approval of Contractors. It is further understood and agreed Lessee must approve of, in writing, all contractors and personnel chosen by Owner to install, maintain and operate the Owner's equipment and that Owner's maintenance and operation of its equipment will in no way damage or interfere with the Lessee's use of the Leased Property, Tower, antennae and appurtenances. Lessee's approval of such contractors and personnel shall not be unreasonably withheld, delayed or conditioned.

F. Owner shall have the option to utilize the Reserved Tower Space during the initial five (5) year term of this Lease. To the extent Owner has not filed an application with Lessee to utilize the Reserved Tower Space prior to the expiration of the initial term of this Lease, Owner shall lose its rights in and to the Reserved Tower Space, and Lessee shall be free to use the same for its own purposes or to sublease or license the same to third parties.

5. **FEASIBILITY PERIOD.** The period of time commencing on the date that this Lease has been executed by both Owner and Lessee ("Execution Date") until the earlier of (i) the date that Lessee commences installation of Lessee's communications facilities on the Leased Property or (ii) sixty (60) days from the Execution Date, shall be referred to herein as the "Feasibility Period". Upon two (2) business days notice to Owner, delivered in accordance with Paragraph 22 of this Lease, Lessee, its agents and contractors shall have the right to enter

upon the Owner's Property between 8:00 A.M. and 5:00 P.M._during the Feasibility Period to conduct tests and studies (collectively, "Feasibility Tests"), at Lessee's expense, to determine the suitability of the Leased Property for Lessee's communications facilities and intended use. The Feasibility Tests may include, without limitation, surveys, soils tests, environmental assessments and radio wave propagation measurements. Lessee shall restore the Owner's Property to its original condition, reasonable wear and tear excepted, and at its sole expense upon completion of such Feasibility Tests. In consideration of Owner granting Lessee the right to conduct Feasibility Tests during the Feasibility Period, Lessee agrees to pay Owner the sum of One Hundred Dollars ($100.00) within thirty (30) days of the Execution Date. If Lessee determines in Lessee's sole and absolute discretion, that the Leased Property is not suitable for Lessee's communications facilities or intended use after conducting any of such Feasibility Tests, Lessee shall have the right to terminate this Lease in accordance with the Provisions of Paragraph 9, prior to the end of the Feasibility Period. From and after the Execution Date, the provisions of this Lease shall be in effect except that the Lease term and obligation to pay rent shall not commence until the Commencement Date. Except as otherwise provided herein, the "Commencement Date" shall be defined as the date that is the first day of the month after the date Lessee begins construction of the Tower. No construction or installation shall occur (other than Feasibility Tests) prior to the date Lessee is granted a development permit and building permit by the City of Sanibel. To the extent that any suit, appeal or other proceeding instituted by third parties against Owner and/or Lessee delays the construction of the Tower or Lessee's ability to operate its equipment from the Tower once constructed, notwithstanding the obtaining of a building permit by Lessee, the Commencement Date shall not occur until the resolution of any such suit, appeal or proceeding, with finality, such date as shall be agreed upon by the parties for purposes of certainty.

6. **TERM; AND EXTENSIONS.**

A. Initial Term. This Lease shall be for an initial term of five (5) years and zero (0) months beginning on the Commencement Date.

B. Extensions. This Lease shall automatically be extended on the same terms and conditions (other than the annual rent which shall escalate in accordance with the provisions of Paragraph 7) for three (3) additional, successive five (5) year extension periods unless Lessee gives Owner written notice of Lessee's intention not to extend this Lease at least one hundred eighty (180) days prior to the end of the then-current term.

7. **RENT.**

A. Initial Rent. Annual rent shall be paid in equal monthly installments in advance beginning on the Commencement Date and on first (1st) day of each month thereafter to Owner at the address set forth for notices in Paragraph 22 or to such other address as Owner may advise Lessee, in writing, pursuant to the notice provisions of Paragraph 22. The annual rent shall be Twenty-Five Thousand and

00/100 Dollars ($25,000.00). The initial monthly rent payment shall be paid on or before the Commencement Date.

B. Escalations. Beginning on the first anniversary of the Commencement Date, and annually thereafter, the annual rent shall be an amount equal to the annual rent in effect for the immediately preceding one (1) year period, increased by three percent (3%).

C. Additional Rent.

(i) In the event Lessee subleases any portion of the Leased Property, any rental paid by any sublessee(s) shall be divided between Owner and Lessee in the following manner: 50% to Owner and 50% to Lessee. Lessee agrees that any such sublessee(s) shall be instructed to pay the foregoing percentage amounts directly to Owner and Lessee. Lessee shall not be responsible to Owner for the collection or payment of rents by the sublessee(s) to Owner, and Lessee shall have no liability to Owner in the event sublessee(s) fail to make such payment(s). Lessee will provide Owner with a tri-party agreement to be executed by Lessee, sublessee(s) and Owner to confirm the direct payment obligation from the sublessee(s) to Owner, to set forth Owner's remedies in the event of non-payment or late payment by sub-lessee and to indicate Owner has been notified of the sublease.

(ii) It is understood and agreed by the parties hereto that the foregoing rental percentage amounts shall only apply if Lessee is able to accommodate all of the ground space needs of such sublessee(s) facilities within the Leased Property. If Lessee is unable to accommodate all of the ground space needs of any such sublessee(s) within the Leased Property, then such sublessee(s) will be required to obtain the necessary ground space from Owner and will have to enter into a separate agreement with Owner for the necessary ground space within Owner's Property that sublessee(s) requires to locate its facilities. In this event, Lessee shall receive 100% of the rental or fees paid by such sublessee(s) to Lessee for the tower space being leased or licensed from Lessee, and Owner shall receive 100% of the rental or fees paid by such sublessee(s) to Owner for the ground space being leased or licensed from Owner.

8. **APPROVALS; UTILITIES.** Lessee, at Lessee's expense, shall be responsible for (i) obtaining all licenses, certificates, permits and other approvals required by any federal, state or local governmental or quasi-governmental authority for Lessee and its sublessees and/or licensees' use of the Leased Property and/or operation of their respective communications facilities thereon (collectively, "Approvals") and (ii) installing new utilities or upgrading existing utilities on the Leased Property and across the Owner's Property necessary for the operation of its communications facilities and paying for all utilities consumed by Lessee and its sublessees and/or licensees at the Leased Property. Lessee and its sublessees and/or licensees shall either separately meter or sub-meter all utilities consumed by Lessee and its sublessees and/or licensees. Owner agrees to cooperate with Lessee and its sublessees and/or licensees in obtaining

and/or maintaining, at no expense to Owner, such Approvals, utility services and easements reasonably required for Lessee's and its sublessees' and/or licensees' use of the Leased Property and/or operation of their respective communications facilities thereon, including, without limitation, the execution of all documents reasonably required for such Approvals, utility services and easements, provided such documents are not inconsistent with the terms of this Lease.

9. **TERMINATION.** Lessee shall have the right to terminate this Lease at any time without further liability hereunder if Lessee determines that any one (1) or more of the following events is occurring or has occurred:

A. Approvals and/or Easement Not Obtainable. All Approvals and/or easements for Lessee's intended use of, or operation or construction of its communications facilities on, the Leased Property cannot be obtained by the Commencement Date; or

B. Approvals and/or Easements Cancelled. Any Approval and/or easement for Lessee's intended use of, or operation or construction of its communications facilities on, the Leased Property is canceled, withdrawn, terminated or denied or expires or lapses; or

C. Ownership; Authority. Owner does not have legal or sufficient ownership of the Leased Property or the authority to enter into this Lease; or

D. Hazardous Material. Within thirty (30) days of learning that the Owner's Property contains a Hazardous Material, as defined in Paragraph 14, not introduced to the Property by Lessee or one of its sublessees or licensees and not discovered or discoverable during the performance of a Phase I environmental study of the Property during the Feasibility Period; or

E. Title. The status of the title to the Leased Property is unacceptable, in Lessee's sole discretion, prior to the Commencement Date; or

F. Feasibility. Based on the results of any Feasibility Tests conducted during the Feasibility Period, the Leased Property is not suitable for Lessee's intended use or the operation or construction of its communications facilities, in Lessee's sole and absolute discretion.

G. Technical Compatibility. Lessee determines that the Leased Property is no longer technically compatible for its intended use.

H. Annual Termination. Upon each annual anniversary of the Commencement Date, provided Lessee has notified Lessor in writing pursuant to Section 22 of this Lease of Lessee's intent to terminate at least 120 days prior to such termination.

I. Loss of Approvals. In the event any Approval necessary for Lessee's continued operations at the Leased Property is canceled through no fault of Lessee.

J. Other. In the event construction of the Tower or Lessee's

ability to operate its equipment from the Tower once constructed is delayed due to any suit, appeal or other proceeding instituted by third parties against Owner and/or Lessee, and Lessee determines that resolution of any such suit, appeal or proceeding, with finality, will not occur in a timely manner.

Under any of the above circumstances, Lessee may terminate this Lease by giving Owner written notice thereof delivered in accordance with the provisions of Paragraph 22. If Lessee elects to terminate this Lease pursuant to this Paragraph 9, this Lease shall terminate as of the date set forth in the notice of termination sent by Lessee to Owner, which date shall not be more than one hundred twenty (120) days from the date of such notice. Within thirty (30) days after such termination, Owner shall pay to Lessee any prepaid annual rent that has not accrued as of the date of such termination. Owner's obligation to pay the foregoing rental amount shall survive termination of this Lease.

10. **ASSIGNMENT; SUBLEASE; LICENSE.**

A. This Lease may be sold, assigned or transferred by Lessee without any approval or consent of Owner to Lessee's principal(s), affiliates, or any subsidiary of Lessee, its principal(s) or affiliates; to any entity which acquires all or substantially all of Lessee's assets in the market defined by the Federal Communications Commission in which the Owner's Property is located by reason of a merger, acquisition or other business reorganization; or to any entity which acquires or receives an interest in the majority of communication towers of Lessee in the market defined by the Federal Communications Commission in which the Owner's Property is located. As to other parties, this Lease may not be sold, assigned or transferred without the written consent of Owner, which such consent will not be unreasonably withheld, delayed or conditioned. No such assignment to third parties shall relieve Lessee of its obligations hereunder for the remaining portion of the then-current lease term. Further, any such sale, assignment or transfer, even made with the written consent of Owner, shall be made specifically subject to all applicable City of Sanibel Ordinances, Resolutions and the Approval Conditions.

B. Notwithstanding the foregoing, Lessee may sublease any portion of the Leased Property at its sole discretion, upon notice to Owner, provided that such sublease complies with all applicable requirements of City of Sanibel Ordinance 99-07, codified in the Sanibel Land Development Code as Article XVII, Divisions 1 – 4, Sections 126-1511 through 126-1599, and the Approval Conditions. Any sublease that is entered into by Lessee shall be subject to the provisions of this Lease and shall be binding upon the successors, assigns, heirs and legal representatives of the respective parties hereto. To the extent that any renewal periods under this Lease are included in the term of any such sublease, the sublease shall be conditioned on the extension of this Lease, and shall automatically terminate upon the non-renewal, expiration or early termination of this Lease. The term "sublease", "sublet", "sublessee" and any other similar term shall apply to any situation

by which Lessee allows a third party use of the Leased Property for co-location, whether it be by formal sublease, license or other agreement. All rights and responsibilities of Lessee set forth in this Lease shall be enjoyed by and binding on any sublessee. Such sublease shall not act to relieve Lessee of its obligations hereunder.

C. Material to Owner's decision to enter into this Lease is Lessee's representation and warranty that it will comply with all applicable provisions of City Ordinance 99-07, and the Approval Conditions including, but not limited to, the obligation to allow for co-location on the Tower constructed on the Leased Property at reasonable rates and subject to the terms hereof. Provided that Lessee is not in violation of these or any other requirements of the Ordinance, Lessee shall have the sole right to determine whether it will allow any specific sublessee, other than Owner, to co-locate on the Tower.

11. INDEMNIFICATION AND INSURANCE.

A. Indemnification by Lessee. Lessee hereby agrees to indemnify and hold Owner and Owner's officials, partners, affiliates, agents and employees harmless from and against any and all liabilities, claims, demands, action, losses, damages, orders, penalties, costs and/or expenses including, without limitation, reasonable attorneys fees and costs resulting from: (i) personal injury or property damage arising out of the acts or omissions of Lessee, its agents and/or employees in any way relating to the Leased Property; (ii) Lessee's breach of any covenants or provisions of this Lease to be observed or performed by Lessee and failure to cure such breach after the expiration of all applicable cure periods; (iii) any damages or causes of action arising out of or relating to Lessee's, or any of its sublessees' or licensees' use of the Leased Property or Owner's Property under this Lease; and/or (iv) personal injury or property damage (subject to the waiver of subrogation set forth in Paragraph 11.D. below) arising out of a failure or collapse, for any reason, of the Tower or attached facilities (except any of Owner's equipment) to be constructed on the Leased Property. Notwithstanding any of the foregoing, Lessee shall have no obligation to indemnify and hold Owner and Owner's officials, partners, affiliates, agents and employees harmless from and against any liabilities, claims, demands, actions, losses, damages, orders, penalties, costs and/or expenses resulting solely from the acts or omissions of Owner, its officials, partners, affiliates, agents or employees. The obligations of Lessee under this Paragraph 11.A shall survive termination or expiration of this Lease.

B. Lessee's Insurance. Lessee shall carry comprehensive general liability insurance with limits of liability thereunder of not less than $2.5 million combined single limit for bodily injury and/or property damage, including coverage for contractual liability (subject to standard policy exclusions). Such insurance shall name Owner, as an additional insured with respect to the Leased Property and related easements, shall be issued by an insurance company authorized to do business in the state in which the Leased Property is located and shall provide thirty (30) days prior written notice to Owner of any cancellation of

such policy. On or before the Commencement Date, Lessee shall deliver to Owner a certificate evidencing that such insurance is in effect, and, thereafter, within ten (10) business days of Owner's request for any such certificate. Any insurance required to be provided by Lessee under this Paragraph 11.B. may be provided by a blanket insurance policy covering the Leased Property and easements and other properties of Lessee, provided such blanket insurance policy complies with all of the other requirements of this Lease with respect to the type and amount of insurance required.

C. Owner's Insurance. To the extent permitted by law, Owner shall carry comprehensive general liability insurance with limits of liability thereunder of not less than $2.5 million combined single limit for bodily injury and/or property damage, including coverage for contractual liability (subject to standard policy exclusions), covering Owner's Property. Such insurance shall be issued by an insurance company authorized to do business in the state in which the Owner's Property is located. On or before the Commencement Date, Owner shall deliver to Lessee a certificate evidencing that such insurance is in effect, and, thereafter, within ten (10) business days of Lessee's request for any such certificate. Any insurance required to be provided by Owner under this Paragraph 11.C. may be provided by a blanket insurance policy covering the Owner's Property and other properties of Owner, provided such blanket insurance policy complies with all of the other requirements of this Lease with respect to the type and amount of insurance required.

12. EVENT OF DEFAULT.

A. Event of Default by Lessee. The occurrence of any one (1) or more of the following events shall constitute an "Event of Default" hereunder by Lessee:

(i) The failure by Lessee to make any payment of rent or any other payment required to be made by Lessee hereunder, as and when due, where such failure continues for a period of fifteen (15) days after Lessee's receipt of written notice thereof from Owner.

(ii) The failure by Lessee to observe or perform any of the covenants or provisions of this Lease to be observed or performed by Lessee, other than as specified in Paragraph 12.A.(i), where such failure continues for a period of thirty (30) days after Lessee's receipt of written notice thereof from Owner; provided, however, that it shall not be an Event of Default by Lessee if Lessee commences to cure such failure within such thirty (30) day period and thereafter diligently and expeditiously prosecutes such cure to completion.

B. Event of Default by Owner. The occurrence of any one (1) or more of the following events shall constitute an Event of Default hereunder by Owner:

(i) The failure by Owner to observe or perform any of the covenants or provisions of this Lease to be observed or performed by Owner, where such failure continues for a

period of thirty (30) days after written notice thereof is given to Owner, provided, however, that it shall not be an Event of Default by Owner if Owner commences to cure such failure within such thirty (30) day period and thereafter diligently and expeditiously prosecutes such cure to completion, provided, further, Owner shall not be granted more than thirty (30) days to cure a monetary breach of this Lease.

(ii) If Owner defaults or an event of default occurs under any mortgage, deed of trust, any lease under which Owner holds title to any portion of Owner's Property, or any other similar encumbrance and such default or event of default adversely affects Lessee's and/or its sublessees' and/or licensees' use of the Lease Property or the operation of Lessee's and/or its sublessees' and/or licensees' communications facilities on the Leased Property.

(iii) A voluntary or involuntary petition in bankruptcy is filed by or against Owner, or Owner becomes insolvent (meaning, unable to pay his, her or its debts as they become due), or Owner makes a transfer or conveyance in constructive or actual fraud of creditors or makes a general arrangement or general assignment for the benefit of creditors.

C. Remedies Upon Default. If an Event of Default occurs by Lessee or Owner, the non-defaulting party shall have all remedies available to it in law or equity, including without limitation the right to terminate this Lease. In the event Lessee terminates this Lease due to an Event of Default by Owner, then within thirty (30) days after such termination, Owner shall pay to Lessee any prepaid annual rent that has not accrued as of the date of such termination. Owner's obligation to pay the foregoing rental amount shall survive termination of this Lease.

13. **SALE OR TRANSFER BY OWNER.** Should Owner, at any time during the term of this Lease, as may be extended, sell, lease, transfer or otherwise convey all or any portion of Owner's Property to any transferee other than Lessee, such sale, lease, transfer or other conveyance shall be subject to this Lease and all of Lessee's rights hereunder.

14. **HAZARDOUS SUBSTANCES.**

A. Lessee shall undertake an environmental study, at Lessee's sole expense, during the Feasibility Period, to the extent necessary to satisfy itself with respect to the presence of any Hazardous Substances on or near the Leased Property. Lessee hereby agrees that it will not use, store or dispose of any Hazardous Substances at or near the Leased Property in violation of any applicable federal, state or local laws or regulations. For purpose of this provision, "Hazardous Substances" include any substance identified as hazardous, toxic, or dangerous in any applicable federal, state, or local law or regulation, including petroleum products. Lessee agrees to indemnify and hold Owner harmless from any cost, liability or expense (including without limitation, cost of cleanup or fines, reasonable attorney fees, and court or administrative proceedings) incurred on account of contamination of the Owner's Property or Leased Property by any

Hazardous Substance used, stored or disposed of by Lessee. Lessee's obligations under this Paragraph 14 shall survive the termination, for any reason, or expiration of this Lease.

B. Owner represents and warrants that it has no knowledge of any Hazardous Substances on the Owner's Property, except those substances and materials which are used, regularly or intermittently, as part of Owner's municipal sewage treatment plant operation located on Owner's Property, which is acknowledged by Lessee to be the primary and ongoing use for Owner's_Property. Owner shall be responsible for all obligations of compliance with any and all environmental and industrial hygiene laws, including any regulations, guidelines, standards, or policies of any governmental authorities regulating or imposing standards of liability or standards of conduct with regard to any environmental or industrial hygiene conditions or concerns as may now or at any time hereafter be in effect, that are or were in any way related to activity now conducted in, on, or in any way related to the Owner's Property, unless such conditions or concerns are caused by the activities of Lessee. To the extent permitted by law, Owner shall hold Lessee harmless and indemnify Lessee from and assume all duties, responsibility and liability at Owner's sole cost and expense, for all duties, responsibilities, and liability (for payment of penalties, sanctions, forfeitures, losses, costs, or damages) and for responding to any action, notice, claim, order, summons, citation, directive, litigation, investigation or proceeding which is in any way related to: (i) Owner's failure to comply with any environmental or industrial hygiene law, including without limitation any regulations, guidelines, standards, or policies of any governmental authorities regulating or imposing standards of liability or standards of conduct with regard to any environmental or industrial hygiene concerns or conditions as may now or at any time hereafter be in effect, unless such compliance results from conditions caused by Lessee; and (ii) any environmental or industrial hygiene conditions arising out of or in any way related to the condition of the Owner's Property or activities conducted thereon, unless such environmental conditions are caused by Lessee. Owner's obligations under this Paragraph 14 shall survive the termination, for any reason, or expiration of this Lease.

15. **CONDEMNATION.**

A. Entire Condemnation. In the event the whole of Owner's Property, including, without limitation, the Leased Property, shall be permanently taken or condemned for public purposes, or sold to a condemning authority under threat of condemnation to prevent taking, this Lease shall automatically terminate as of the day of the taking, condemnation or sale.

B. Partial Condemnation. In the event any portion of the Leased Property shall be permanently taken or condemned for public purposes, or sold to a condemning authority under threat of condemnation to prevent taking, and as a result of such taking, condemnation or sale, Lessee determines, in its sole discretion, that it can not continue operation of its communications facilities, then Owner agrees that

Lessee may use and/or construct upon an alternate portion of Owner's Property which is equally suitable for Lessee's purposes, provided such alternate portion is available and will not interfere with Owner's other use of Owner's Property at that time. The location of the alternate portion of Owner's Property to which Lessee may relocate shall be mutually determined by Owner and Lessee. If an alternate portion of Owner's Property is available and acceptable to both Owner and Lessee, then Owner and Lessee shall enter into an amendment to this Lease designating such alternate portion of Owner's Property as the Leased Property. In the event no alternate portion of the Owner's Property is agreeable to both Lessee and Owner, this Lease shall automatically terminate as of the day of the taking, condemnation or sale.

C. Notwithstanding anything contained in Paragraphs 15.A. or 15.B. to the contrary, in the event of any taking, condemnation or sale in lieu of a taking of the Owner's Property, Lessee may terminate this Lease upon fifteen (15) days written notice to Owner if such condemnation may reasonably be expected to disrupt Lessee's operations at the Leased Property for more than forty-five (45) days.

D. Condemnation Award. Owner shall receive the entire condemnation award for the land and such other improvements as are owned by Owner, and Lessee hereby expressly assigns to Owner any and all right, title and interest of Lessee now or hereafter arising in and to any such award. Notwithstanding the foregoing, Lessee shall have the right to recover from such authority, but not from Owner, any compensation as may be awarded to Lessee on account of Lessee's leasehold interest, moving and relocation expenses, interruption of business and depreciation to and removal of the personal property and fixtures of Lessee.

D. Rebate of Rent. If this Lease is terminated pursuant to the provisions of Paragraphs 15.A., 15.B., or 15.C., Owner shall, within thirty (30) days after the termination date, reimburse to Lessee any prepaid rent that has not accrued as of the termination date, and all rights and obligations of Owner and Lessee arising after the date of termination shall terminate, except as specifically set forth in this Lease. The Owner's obligation under this subparagraph shall survive termination or expiration of this Lease.

16. **LIENS.**

A. Mechanics' Liens. Lessee shall keep the Leased Property free from any liens arising out of any work performed, materials furnished, or obligations incurred by or for Lessee, its sublessees or licensees. Lessee shall, within twenty (20) days of Lessee's receipt of written notice from Owner of the imposition of such lien, (i) cause the same to be released of record by payment or (ii) deliver to Owner a bond in the amount of one hundred ten percent (110%) of the amount of the lien. Upon delivery of the bond to Owner, Lessee may contest the validity of the lien. Once the lien is released of record, any bond provided by Lessee to Owner shall be released and returned to Lessee. No work which Owner permits

Lessee to perform on the Lease Property shall be deemed to be for the use of benefit of Owner so that no mechanics or other lien shall be allowed against the estate of Owner by reason of its consent to such work. Owner shall have the right to post notices that it is not responsible for payment for any such work.

17. **TAXES; MAINTENANCE.**

A. Taxes. Lessee shall be responsible for paying all personal property taxes assessed directly upon Lessee's communications facilities, and requiring that its sublessees and licensee's pay all personal property taxes assessed directly upon its sublessee's or licensee's communications facilities, located on the Leased Property. Lessee also shall be responsible for paying to Owner, as additional rent, all applicable real estate taxes assessed directly upon the Leased Property (including any portion of such taxes attributable to Lessee's communications facilities) within thirty (30) days of Lessee's receipt from Owner of a tax bill evidencing such taxes, and Owner shall pay such taxes to the appropriate governmental authorities upon receipt of such funds from Lessee. Lessee shall pay to Owner, all applicable sales taxes levied against the annual rent paid by Lessee to Owner, and Owner shall pay such sales taxes to, and file all required forms with, the appropriate governmental authorities upon receipt of such sales taxes levied against Owner's income derived from the Leased Property. Lessee shall have the right, at its sole option and at its sole cost and expense, to appeal, challenge or seek modification of any real estate tax assessment or billing for which Lessee is wholly or partly responsible for payment under this Lease. Owner shall reasonably cooperate with Lessee in filing, prosecuting and perfecting any appeal or challenge to real estate taxes as set forth in the preceding sentence, including but not limited to, executing any consent to appeal or other similar document.

B. Maintenance. Lessee, at Lessee's expense, shall be responsible for maintaining, repairing and replacing Lessee's communications facilities located on the Leased Property and shall cause its sublessees and/or licensees to maintain, repair and replace their respective communications facilities located on the Leased Property. All maintenance, repairs, and replacement required pursuant to this paragraph 17.B. shall be performed in good and workmanlike manner and shall be in compliance with all Governmental Laws, as defined in Paragraph 23.C. Owner will maintain the Owner's Property, excluding the Leased Property, in good condition, reasonable wear and tear excepted.

18. **QUIET ENJOYMENT AND NON-INTERFERENCE.**

A. Quiet Enjoyment. Owner represents, warrants and agrees that Lessee, upon paying the rent and performing the covenants and provisions in this Lease to be observed or performed by Lessee shall peaceably and quietly have and enjoy the Leased Property.

B. Interference. A material inducement to Owner's entering into this Lease is the right to place Owner's

emergency communications equipment (identified in Paragraph 4) on the Tower. Moreover, Lessee hereby acknowledges that Owner's emergency communications equipment on the Tower may be required during times of emergency. Accordingly, Lessee hereby agrees that it has not, nor shall it enter into any sublease or license to allow, or construct or permit the construction or placement of, any facility that would cause measurable interference to the operation of Owner's emergency communications equipment on the Tower. If any such interference occurs, Lessee agrees at its sole cost and expense, to eliminate or cause the elimination of such interference with the operation of Owner's emergency communications equipment on the Tower, including the signal strength of Owner's antennas on the Tower and Owner's use of any ground space within the Leased Property within ten (10) days after Lessee's receipt of Owner's written notice of such interference and, if necessary, to cause the interfering party to cease operating the equipment causing said interference; provided, however, such interfering party may thereafter intermittently operate the interfering equipment for purposes of determining if the interference has been cured. Lessee will examine the Property during the Feasibility Period to ensure that no existing use of the Property will interfere with Lessee's authorized use under this Lease. Owner shall not cause, permit or allow any other use of, or condition on, Owner's Property, not existing as of the Execution Date, which causes measurable interference with or impairs (i) the communications facilities of, including the signal strengths of antennas operated by Lessee or its sublessees and/or licensees from the Leased Property or (ii) the use of the Leased Property by Lessee and/or its sublessees and/or licensees. If any such interference occurs, Owner agrees to eliminate or cause the elimination of such interference with Lessee's or its sublessees' and/or licensees' operations of their respective communications facilities, including the signal strength of their antennas and/or use of the Leased Property within ten (10) days after Owner's receipt of Lessee's written notice of such interference and, if necessary, to cause the interfering party to cease operating the facilities causing the interference. Nothing herein shall be read to require Owner to have any duty with respect to Lessee, any sublessee or licensee for any interference caused thereto from any use of Owner's emergency communications equipment on the Tower, or any other use by Owner that predates the deployment of the specific equipment and/or frequencies that are causing or being caused measurable interference.

19. **RIGHTS TO EQUIPMENT; CONDITION ON SURRENDER.**

A. Personal Property. The communications facilities, equipment, improvements (including without limitation the Tower), fixtures and other property of Lessee and its sublessees and/or licensees on the Leased Property shall be and remain the personal property of Lessee and/or its sublessees and/or licensees, even though some of it may be permanently affixed to the land, and Lessee and its sublessees and/or licensees shall be entitled to take or remove all or any portion of their respective communications facilities, equipment, improvements, fixtures and

other property from the Leased Property without any hindrance by, through, or under Owner or the holder of any mortgage, deed of trust, ground lease or other encumbrance. Owner expressly waives all rights of levy, distraint or execution with respect to Lessee's and its sublessees' and/or licensees' property, including without limitation any statutory or common law security interest or landlord's lien for rent. Within ninety (90) days after the termination or expiration of this Lease, Lessee and its sublessees and/or licensees shall have the obligation to remove all or any part of their respective communications facilities, equipment, improvements, fixtures and other property from the Leased Property, except Lessee shall have no obligation to remove the Tower footings. Lessee or its sublessees and/or licensees shall repair or cause to be repaired any damage caused by such removal, and shall otherwise surrender the Leased Property in good condition, ordinary wear and tear, reimbursed damage by fire and other casualty excepted. Any of Lessee's or its sublessees' and/or licensees' communications facilities, equipment, improvements, fixtures and other property that has not been removed from the Property within said ninety (90) day period shall be deemed abandoned by Lessee or its sublessees and/or licensees. At such time, Owner may elect to either retain such property as its own (in which case Lessee shall execute all documentation reasonably requested by owner to formally transfer title of such property to Owner), or have such property removed and the Leased Property and easement areas restored to the condition required above at Lessee's sole expense. Notwithstanding any other provision of this Lease, Owner may require, upon written notice to Lessee, that the Tower and Owner's emergency broadcasting equipment remain on the Lease Property, and Lessee shall execute all documentation reasonably requested by owner to formally transfer title of such property to Owner. To the extent any such transfer of the Tower were to occur on or before Fifteen (15) years after the Commencement Date, Owner shall pay to Lessee the fair market value of any assets transferred to Owner.

20. **BROKERS.** Owner and Lessee each represent and warrant to the other that he, she or it has not negotiated with any broker or agent, real estate or otherwise, in connection with this Lease. Owner and Lessee each agrees that, if any claim is made against the other for a broker's or agent's commission, finder's fee or the like by reason of the acts of the first party, then the first party shall indemnify (with respect to Owner, to the extent permitted by law) and hold the other harmless from and against any and all liabilities, claims, demands, actions, losses, damages, orders, penalties, costs and/or expenses, including, without limitation, reasonable attorneys fees incurred in connection therewith and shall defend such action by legal counsel reasonably acceptable to the other.

21. **ESTOPPEL CERTIFICATES.**

A. Owner. Owner, at the request of Lessee, shall provide Lessee with a certificate stating: (i) whether Owner has any claim against Lessee and if so, stating the nature of such claim; (ii) that Owner recognizes Lessee's ownership of Lessee's communications facilities and other

property; (iii) that Lessee has the right to remove Lessee's communications facilities and other property from the Leased Property notwithstanding that such may be considered a fixture under local law except as otherwise provided in Paragraph 19.A.; (iv) whether an Event of Default by Lessee has occurred or would occur with the giving of notice and/or the passage of time; and (v) that Owner has no interest in and disclaims any interest to Lessee's communications facilities and other property, except such interest as may be granted pursuant to Paragraph 19.A, or to the extent of Owner's communication and associated equipment that may be placed on the Tower or on the Leased Property.

B. Lessee. Lessee, at the request of Owner, shall provide Owner with a certificate stating: (i) that this Lease is unmodified and in full force and effect (or, if there has been any modification, that the same is in full force and effect as modified and stating the modification); (ii) whether or not, to Lessee's knowledge, any set-offs, or defenses exist against the enforcement of any of the agreements, terms covenants or conditions hereof to be performed or complied with by Lessee (and if so specifying the same); and (iii) the date through which the rent has been paid.

22. **NOTICES.** Any notice, request or demand required or permitted to be given pursuant to this Lease shall be in writing and shall be deemed sufficiently given if (i) delivered by messenger at the address of the intended recipient, (ii) sent prepaid by next-work-day Federal Express (or a comparable guaranteed overnight delivery service), or (iii) deposited in the United States first class mail (registered or certified, postage prepaid, with return receipt requested). Any such notice, request, or demand so given shall be deemed given on the day it is delivered by messenger, on the next-work-day after the day of deposit with Federal Express (or a comparable overnight delivery service), or on the day that is two (2) business days after deposit in the United States Mail, as the case may be.

Lessee:

Verizon Wireless Personal Communications LP
dba Verizon Wireless
180 Washington Valley Road
Bedminster, NJ 07921
Attention: Network Real Estate

Owner:

City of Sanibel
c/o City Manager
800 Dunlop Road
Sanibel, Florida 33597
Telephone: (239) 472-3700

Copy to City Attorney:
Kenneth B. Cuyler, Esq.
800 Dunlop Road
Sanibel, Florida 33957
Telephone: (239) 472-4359

Any party may change his, her or its address for notice purposes by giving notice in accordance with this Paragraph 22.

23. **MISCELLANEOUS PROVISIONS.**

A. Title; Undisclosed Liens. Owner represents, warrants and agrees

that Owner is seized of good and sufficient title to and interest in the Owner's Property and has full authority to enter into and execute this Lease and no undisclosed liens, judgments or impediments of title exist on Owner's Property that would affect this Lease. Owner further represents, warrants and agrees that there are no covenants, easements, restrictions or agreements binding on Owner or the Owner's Property which prevent the use of the Leased Property by the Lessee and its sublessees and/or licensees, as set forth in this Lease.

B. Entire Lease; Amendments. This Lease, including the exhibits and attachments which are attached hereto and incorporated herein by this reference, incorporates all agreements and understandings between Owner and Lessee. No prior or other verbal agreements or understandings shall be binding upon Owner or Lessee, and any addition, amendment, variation or modification to this Lease shall be ineffective unless made in writing and signed by Owner and Lessee.

C. Compliance with Governmental Laws. Owner represents, warrants and agrees that throughout the term of this Lease, as may be extended, the Owner's Property including, without limitation, the Leased Property and all improvements thereon, other than improvements owned by Lessee or its sublessees and/or licensees, shall be in compliance with all laws, codes, and regulations of all federal, state and local governmental or quasi-governmental authorities (collectively, "Governmental Laws"). Lessee agrees that any improvements constructed on the Leased Property by Lessee and/or its sublessees and/or licensees and the operation of the communications facilities of Lessee and/or its sublessees and/or licensees on the Leased Property shall be in compliance with all Governmental Laws.

D. Governing Law. This Lease and the performance hereof shall be governed, interpreted, construed and regulated by the laws of the State of Florida.

E. Benefit. This Lease, and each and every covenant and condition herein, is intended to benefit the Leased Property and to run with the Owner's Property and shall extend to and bind the heirs, personal representatives, successors and assigns of the parties hereto.

F. Covenants and Conditions. The parties agree that all of the provisions hereof shall be construed as both covenants and conditions, the same as if the words importing such covenants and conditions has been used in each separate Paragraph.

G. Construction. The parties acknowledge that each has had an opportunity to review and negotiate this Lease and has executed this Lease only after such review and negotiation. The language of this Lease shall be construed simply and according to its fair meaning, and this Lease shall not be construed more strictly in favor or against either party.

H. Nondisturbance Agreement. At Owner's option, this Lease shall be subordinate to any mortgage or deed of trust which from

time to time may encumber all or any part of the Owner's Property, provided that every such mortgagee, beneficiary, trustee, or other holder having rights thereunder agrees to recognize (in writing and in a form reasonably acceptable to Lessee's counsel) the validity of this Lease and Lessee's rights under this Lease, including without limitation Lessee's right to remain in occupancy and have access to the Leased Property, as long as Lessee is not then in default of this Lease beyond any applicable notice and cure period, in the event of a foreclosure or the exercise of any other remedies under any such mortgage or deed of trust. Lessee shall execute whatever instruments may reasonably be required to evidence this subordination. If, as of the date of execution of this Lease, any mortgage, deed of trust, ground lease or other similar encumbrance affects Owner's Property, Owner agrees to obtain from the holder of such mortgage, deed of trust, ground lease, or other encumbrance a written agreement that Lessee shall not be disturbed in its possession, use and enjoyment of the Leased Property as long as an Event of Default by Lessee has not occurred hereunder.

I. Severability. If any portion of this Lease is declared by an arbitrator or arbitrators, or any court of competent jurisdiction, to be invalid or unenforceable, such portion shall be deemed modified to the extent necessary in such arbitrator's or arbitrators', or any court of competent jurisdiction's opinion to render such portion enforceable, and, as so modified, such portion and the balance of this Lease shall continue in full force and effect.

J. Enforcement. If either party institutes any action or proceeding in arbitration to enforce any provision hereof, or any action in any court of competent jurisdiction for damages for any alleged breach of any provisions hereof, the prevailing party in such action or proceeding, in addition to any other award given by the arbitrator(s), or court, shall be entitled to receive from the non-prevailing party such amount as the arbitrator(s), or court, may adjudge to be reasonable attorneys' fees for the services rendered to the prevailing party, together with its other reasonable litigation expenses.

K. Injunctive Relief. In addition to the other remedies provided for in this Lease, any party shall be entitled to immediate restraint by injunction of any violation of any of the covenants, conditions or provisions of this Lease.

L. Headings. The captions of the Paragraphs of this Lease are for convenience of reference only and shall not affect the interpretation of this lease.

M. Lighting of Communications Facilities. Lessee covenants that as of the Execution Date it has made a determination that no laws or regulations of the Federal Aviation Administration (FAA), Federal Communications Commission (FCC) or any other governmental agency or body require or recommend the lighting and/or marking of the Tower, and that no lighting will in fact be placed on the Tower, and that the absence of such lighting is a material condition of this Lease. Notwithstanding the foregoing, in the event there is a change in any

laws, rules or regulations promulgated by the FAA, FCC or any other governmental agency or body, such that lighting and/or marking of the Tower is required, then Lessee shall comply with such requirement, and compliance therewith shall not be deemed a breach of this Lease. Any lighting of ground facilities on the Leased Property shall be in accordance with Owner's ordinances, resolutions, rules and regulations and requisite building permits.

N. Memorandum of Lease. Concurrently with the execution of this Lease, Owner shall execute before a notary and deliver to Lessee for recording a "Memorandum of Lease Agreement", also referenced as "Short Form Lease", in the form of the attached Exhibit "C." Such Memorandum shall not disclose any financial terms, unless required to do so by the laws of the jurisdiction in which such Memorandum is recorded.

O. Arbitration. Any controversy or claim arising out of or relating to this Lease, or the breach of this Lease, may be settled by arbitration in accordance with the rules and regulations of the American Arbitration Association and in accordance with the Florida Arbitration Code, and judgment upon the award rendered by the arbitrator(s) may be entered in any court having jurisdiction thereof. The decision of the arbitrator(s) shall be final and non-appealable. The place of arbitration shall be Fort Myers, Florida. Arbitration shall be an option upon mutual agreement of the parties and shall not be construed as a requirement of this Lease.

P. Waiver. The failure of either party hereto to insist upon strict performance of any of the terms or conditions of this Lease or to exercise any of its rights under this Lease shall not waive such rights and such party shall have the right to enforce such rights at any time and take such action as may be lawful and authorized under this Lease, either in law or in equity.

Q. Casualty. In the event of damage by fire or other casualty to the Leased Property that cannot reasonably be expected to be repaired within forty-five (45) days following same or, if the Owner's Property is damaged by fire or other casualty so that such damage may reasonably be expected to disrupt Lessee's operations at the Leased Property for more than forty-five (45) days, then Lessee may at any time following such fire or other casualty, provided Owner has not completed the restoration required to permit Lessee to resume its operation at the Leased Property, terminate this Lease upon fifteen (15) days written notice to Owner. Any such notice of termination shall cause this Lease to expire with the same force and effect as though the date set forth in such notice were the date originally set as the expiration date of this Lease, and Owner shall, within thirty (30) days after the termination date, reimburse to Lessee any prepaid rent that has not accrued as of the termination date. The Owner's obligation under this subparagraph shall survive termination or expiration of this Lease. Notwithstanding the foregoing, all rental under this Lease shall abate during the period of such fire or other casualty.

R. Emergency removal of collapsed Tower or other facilities. In

the event of a natural disaster such as a hurricane, Owner shall make reasonable attempts to notify Lessee in the event that Lessee's Tower has been damaged or has collapsed. However, in the event that such emergency condition exists and Lessee's Tower or other facilities have collapsed onto Owner's sewer treatment facility, public right-of-way or other public facilities which require the immediate removal of such facilities, it is acknowledged by Lessee that Owner shall remove such Tower and facility in the event that Lessee is unable to do so within the emergency time-frame established by Owner. Under such circumstances, Owner shall have no liability for any additional damage or destruction to Lesee's Tower or other facilities.

S. Submission of Lease. The submission of this Lease for examination does not constitute an offer to lease the Leased Property and this Lease becomes effective only upon the full execution of this Lease by Owner and Lessees.

T. Authority to Execute. Each of the parties hereto warrants to the other that the person or persons executing this Lease on behalf of such party has the full right, power and authority to enter into and execute this Lease on such party's behalf and that no consent from any other person or entity is necessary as a condition precedent to the legal effect of this Lease.

IN WITNESS WHEREOF, the parties have executed this Lease.

OWNER: City of Sanibel

By: _____
Carla Brooks Johnston, Mayor
800 Dunlop Road
Sanibel, Florida 33957

ATTEST: _____
Pamela Smith, City Clerk

APPROVED AS TO FORM:

_____
Kenneth B. Cuyler, City Attorney

Date: _____

LESSEE:

Verizon Wireless Personal Communications LP
dba Verizon Wireless

By: _____
Name: Hans F. Leutenegger
Title: Area Vice President, Network, South Area

Address: 8921 Research Drive
Charlotte, NC 28262

Date: _____

Witnesses:

By: _____ By: _____
Name: _____ Name: _____
_____

CITY DRAFT #1 2/24/06

127782_v8

EXHIBIT "A"

DESCRIPTION OF OWNER'S PROPERTY

A PORTION OF GOVERNMENT LOT 7, SECTION 12, TOWNSHIP 46 SOUTH, RANGE 21 EAST, LEE COUNTY, FLORIDA, BEING MORE PARTICULARLY DESCRIBED AS FOLLOWS:

COMMENCE AT THE SOUTHWEST CORNER OF SAID GOVERNMENT LOT 7, THENCE S89°56'04"E ALONG THE SOUTHERLY BOUNDARY OF SAID GOVERNMENT LOT 7 A DISTANCE OF 807.27 FEET TO THE POINT OF BEGINNING, SAID POINT LYING ON THE ARC OF A NON-TANGENT CIRCULAR CURVE CONCAVE TO THE SOUTHWEST (A RADIAL LINE THROUGH SAID POINT BEARS S49°28'03"W); THENCE NORTHWESTERLY ALONG THE ARC OF SAID CURVE HAVING FOR ITS ELEMENTS A RADIUS OF 440.00 FEET, A CENTRAL ANGLE OF 04°13'16", A CHORD DISTANCE OF 33.05 FEET, A CHORD BEARING OF N42°49'05"W, AN ARC DISTANCE OF 33.06 FEET; THENCE N45°01'47"E A DISTANCE OF 36.42 FEET; THENCE N44°58'13"W A DISTANCE OF 110.00 FEET; THENCE S45°01'47"W A DISTANCE OF 50.39 FEET TO A POINT ON THE ARC OF A NON-TANGENT CIRCULAR CURVE CONCAVE TO THE SOUTHWEST (A RADIAL LINE THROUGH SAID POINT BEARS S31°14'58"W); THENCE NORTHWESTERLY ALONG THE ARC OF SAID CURVE HAVING FOR ITS ELEMENTS A RADIUS OF 440.00 FEET, A CENTRAL ANGLE OF 32°14'02", A CHORD DISTANCE OF 244.29 FEET, A CHORD BEARING OF N75°33'03"W, AN ARC DISTANCE OF 247.54 FEET; THENCE N05°18'27"W A DISTANCE OF 101.69 FEET; THENCE S84°41'33"W A DISTANCE OF 20.00 FEET; THENCE N05°18'27"W A DISTANCE OF 243.05 FEET; THENCE N57°23'58"E A DISTANCE OF 225.52 FEET; THENCE S41°45'25"E A DISTANCE OF 165.64 FEET; THENCE N75°25'57"E A DISTANCE OF 167.91 FEET; THENCE S58°08'30"E A DISTANCE OF 110.34 FEET; THENCE S31°55'32"W A DISTANCE OF 129.33 FEET; THENCE S55°00'26"E A DISTANCE OF 210.49 FEET; THENCE S68°52'16"E A DISTANCE OF 141.78 FEET; THENCE S49°15'28"E A DISTANCE OF 84.21 FEET; THENCE S32°14'39"W A DISTANCE OF 159.86 FEET TO A POINT ON THE SOUTHERLY BOUNDARY OF SAID GOVERNMENT LOT 7; THENCE WESTERLY ALONG THE SOUTHERLY BOUNDARY OF SAID GOVERNMENT LOT 7 A DISTANCE OF 369.94 FEET TO THE POINT OF BEGINNING.

SAID PARCEL CONTAINS 8.770 ACRES MORE OR LESS.

DESCRIPTION OF PROPOSED

LESSEE'S LEASED PROPERTY

A PORTION OF TRACT "A" OF THE SANCTUARY AT WULFERT POINT PHASE 1, AS SHOWN IN PLAT BOOK 50, PAGE 52 IN THE PUBLIC RECORDS OF LEE COUNTY, FLORIDA, (ALSO BEING A PORTION OF LANDS DESCRIBED IN OFFICIAL RECORDS BOOK 2405, PAGE 3508), MORE PARTICULARLY DESCRIBED AS FOLLOWS:

COMMENCE AT THE POINT OF BEGINNING OF THOSE LANDS DESCRIBED IN OFFICIAL RECORDS BOOK 2405, PAGE 3508 OF THE OFFICIAL PUBLIC RECORDS OF LEE COUNTY, FLORIDA; PROCEED SOUTH 89°58'04" EAST ALONG THE SOUTHERLY LINE OF SAID LANDS, A DISTANCE OF 157.52 FEET; THENCE NORTH 00°01'56" EAST, A DISTANCE OF 33.58 FEET TO THE POINT OF BEGINNING OF THE FOLLOWING DESCRIBED PARCEL; THENCE NORTH 04°10'53" EAST, A DISTANCE OF 50.00 FEET; THENCE SOUTH 85°49'07" EAST, A DISTANCE OF 50.00 FEET; THENCE SOUTH 04°10'53" WEST, A DISTANCE OF 50.00 FEET; THENCE NORTH 85°49'07" WEST, A DISTANCE OF 50.00 FEET TO THE POINT OF BEGINNING.

CONTAINING 2,500.0 SQUARE FEET, MORE OR LESS.

DESCRIPTION OF PROPOSED ACCESS EASEMENT

A PORTION OF TRACT "A" OF THE SANCTUARY AT WULFERT POINT PHASE 1, AS SHOWN IN PLAT BOOK 50, PAGE 52 IN THE PUBLIC RECORDS OF LEE COUNTY, FLORIDA, (ALSO BEING A PORTION OF LANDS DESCRIBED IN OFFICIAL RECORDS BOOK 2405, PAGE 3508), MORE PARTICULARLY DESCRIBED AS FOLLOWS:

COMMENCE AT THE POINT OF BEGINNING OF THOSE LANDS DESCRIBED IN OFFICIAL RECORDS BOOK 2405, PAGE 3508 OF THE OFFICIAL PUBLIC RECORDS OF LEE COUNTY, FLORIDA; PROCEED SOUTH 89°58'04" EAST ALONG THE SOUTHERLY LINE OF SAID LANDS, A DISTANCE OF 157.52 FEET; THENCE NORTH 00°01'56" EAST, A DISTANCE OF 33.58 FEET TO THE POINT OF BEGINNING OF THE FOLLOWING DESCRIBED PARCEL; THENCE NORTH 81°57'52" WEST, A DISTANCE OF 131.58 FEET; THENCE NORTH 45°37'07" WEST, A DISTANCE OF 247.20 FEET; THENCE NORTH 89°58'04" WEST, A DISTANCE OF 35.97 FEET; THENCE SOUTH 78°40'57" WEST, A DISTANCE OF 169.83 FEET TO A POINT ON THE WESTERLY LINE OF LANDS DESCRIBED IN OFFICIAL RECORDS BOOK 2405, PAGE 3508, (ALSO BEING THE WESTERLY LINE OF TRACT "A", AS SHOWN IN PLAT BOOK 50, PAGE 52); THENCE NORTH 05°18'27" WEST ALONG SAID WESTERLY LINE, A DISTANCE OF 20.11 FEET; THENCE NORTH 78°40'57" EAST, A DISTANCE OF 171.28 FEET; THENCE SOUTH 89°58'04" EAST, A DISTANCE OF 45.52 FEET; THENCE SOUTH 45°37'07" EAST, A DISTANCE OF 246.83 FEET; THENCE SOUTH 81°57'52" EAST, A DISTANCE OF 123.67 FEET; THENCE SOUTH 04°10'53" WEST, A DISTANCE OF 20.06 FEET TO THE POINT OF BEGINNING.

CONTAINING 11,712.9 SQUARE FEET, MORE OR LESS.

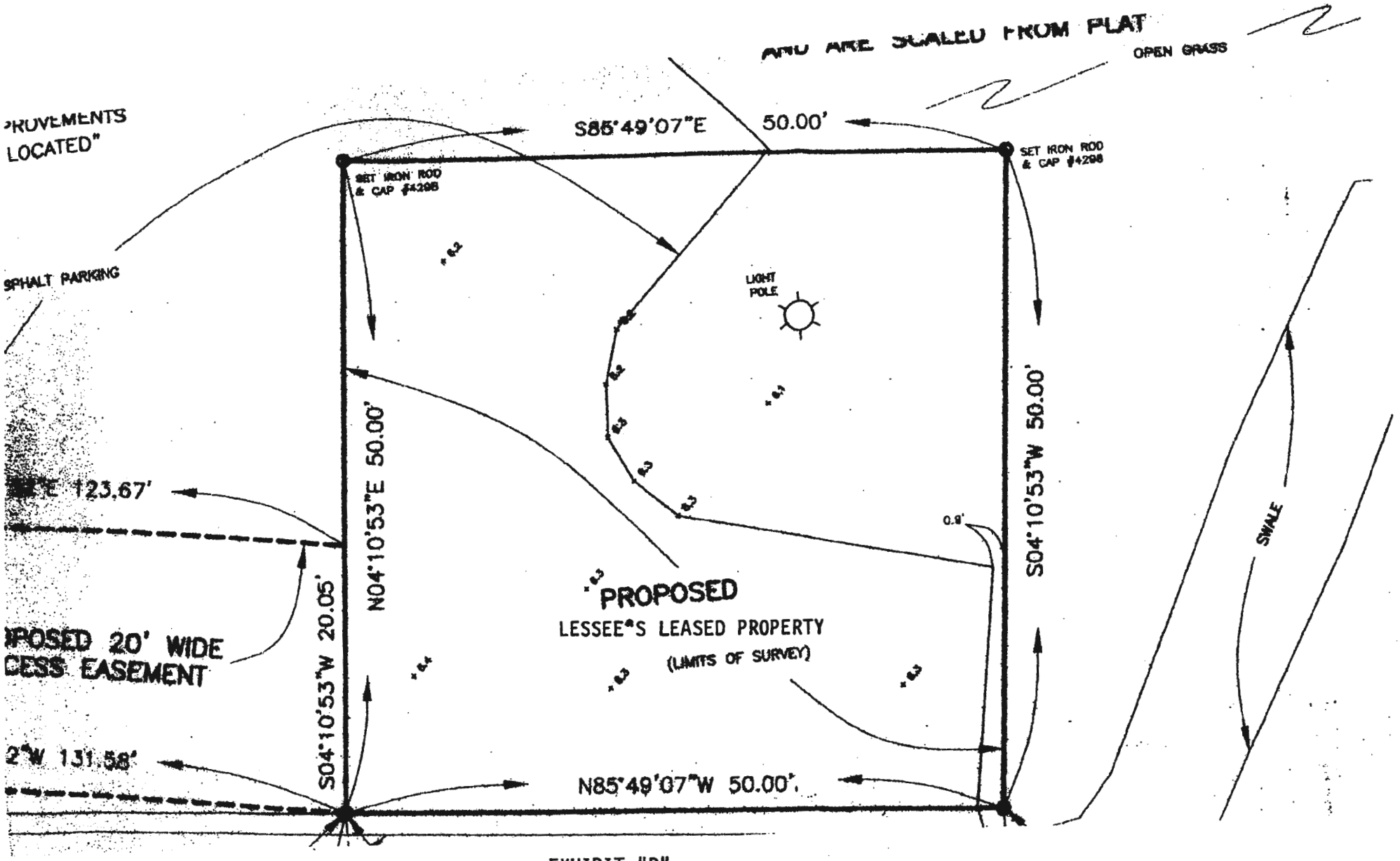

EXHIBIT "B"
Page 2 of 4

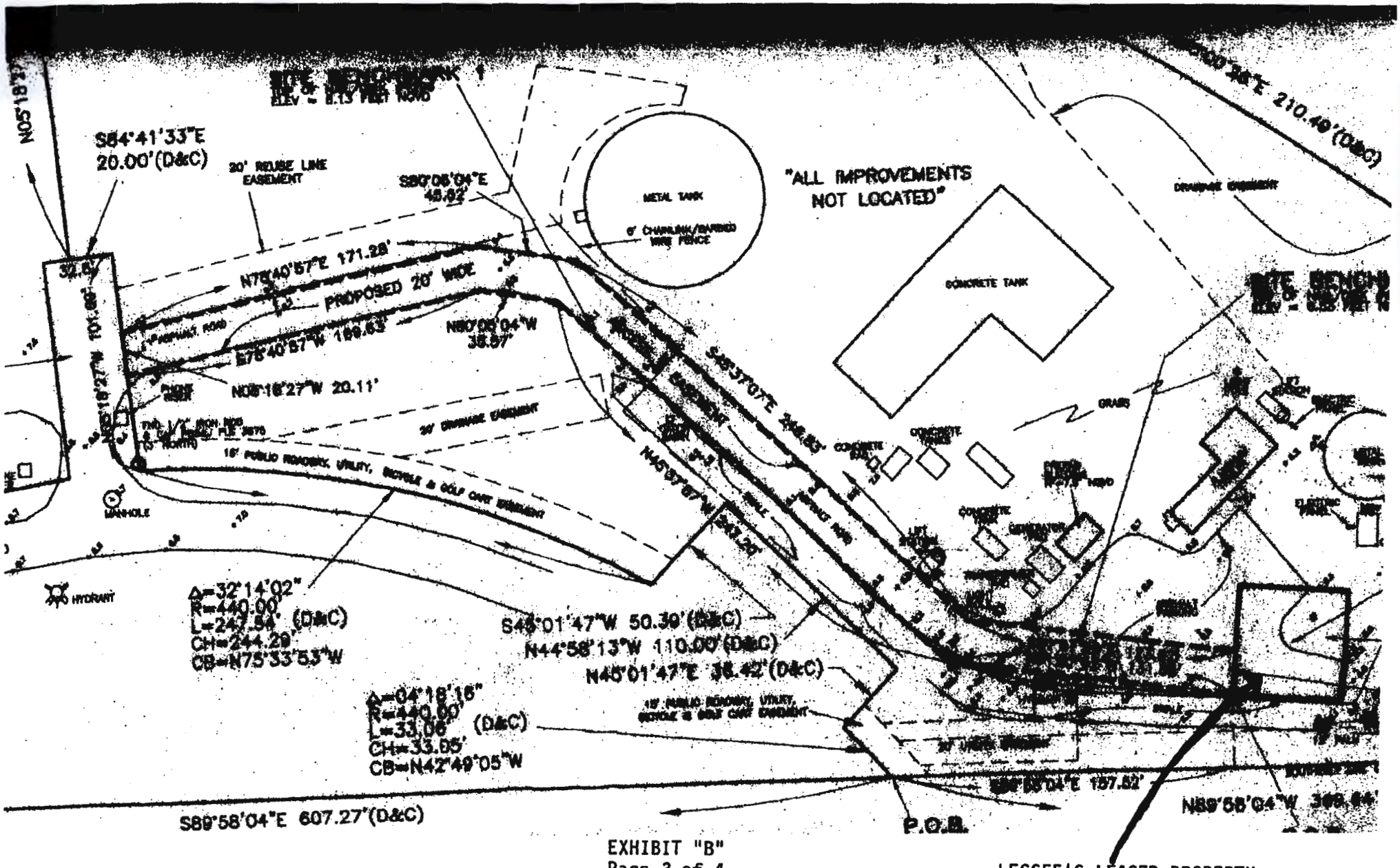

EXHIBIT "B"
Page 3 of 4

LESSEE'S LEASED PROPERTY

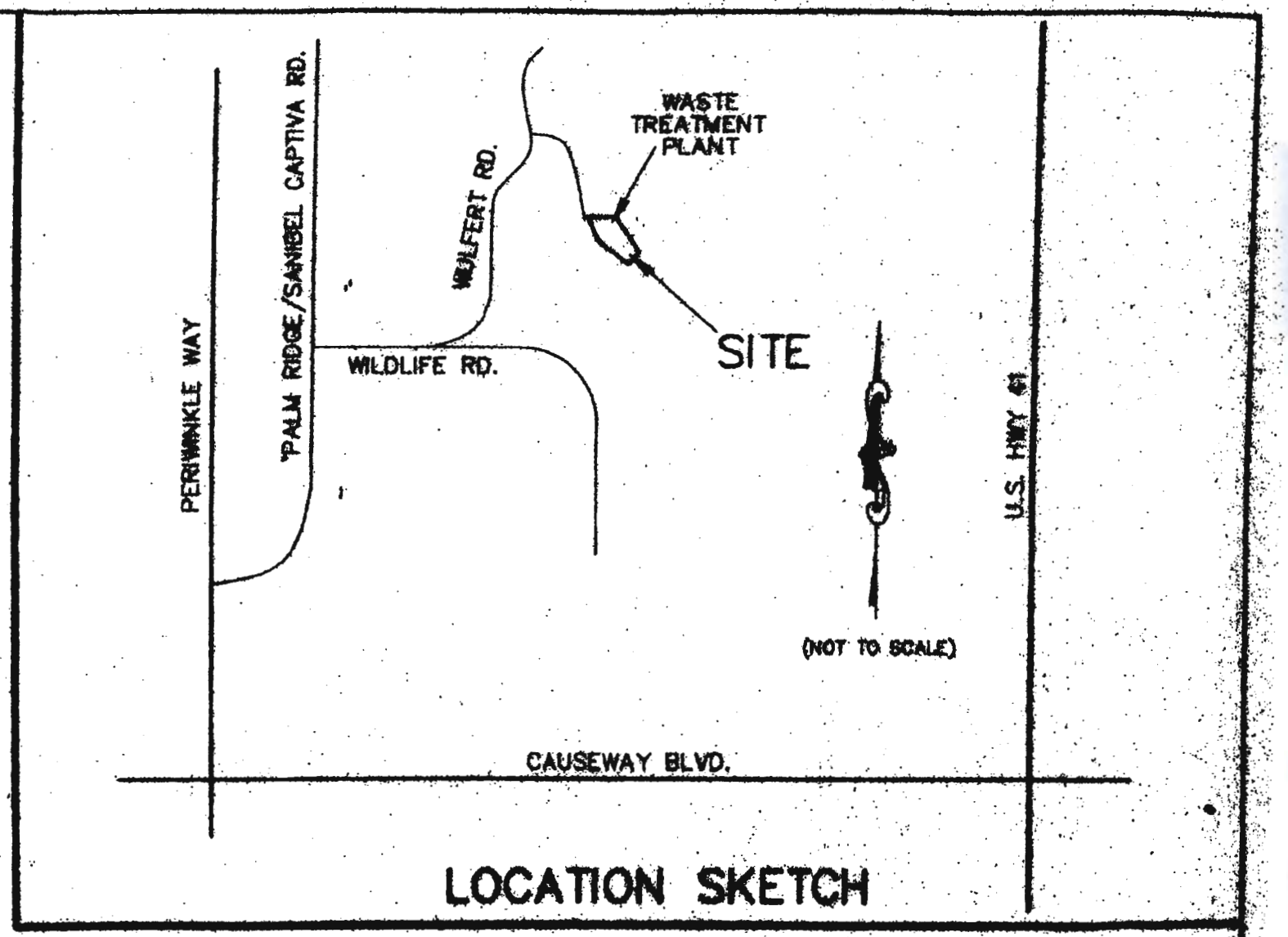

LOCATION SKETCH

Upon Recording, Return to:

Robert M. Motes, Esq.
Holland & Knight LLP
One East Broward Boulevard
Suite 1300
Fort Lauderdale, Florida 33301

STATE OF FLORIDA)
)
COUNTY OF LEE)

MEMORANDUM OF LEASE AGREEMENT

This Memorandum of Lease Agreement is made this _____ day of _____, 2006, between **CITY OF SANIBEL**, with a mailing address of 800 Dunlop Road, Sanibel, Florida 33597, hereinafter collectively referred to as "LESSOR", and **VERIZON WIRELESS PERSONAL COMMUNICATIONS LP** d/b/a Verizon Wireless, with its principal office located at 180 Washington Valley Road, Bedminster, New Jersey 07921, hereinafter referred to as "LESSEE". LESSOR and LESSEE are at times collectively referred to hereinafter as the "Parties" or individually as the "Party".

1. LESSOR and LESSEE entered into a Lease Agreement (the "Agreement") on _____, 2006 for an initial term of five (5) years, commencing on the Commencement Date (defined in the Agreement to be the first day of the month after the date LESSEE begins construction of its communications tower on the Premises). The Agreement shall automatically be extended for three (3) additional five (5) year terms unless the LESSEE terminates it at the end of the then current five (5) year term by giving the LESSOR written notice of the intent to terminate at least one hundred eighty (180) days prior to the end of the then current five (5) year term.

2. LESSOR owns certain real property and the improvements thereon commonly known as 2222 Wulfert Road, City of Sanibel, County of Lee, State of Florida (the "Property") as described on the attached Exhibit "A". LESSOR hereby leases and demises to LESSEE a portion of the Property comprised of approximately 2,500 (50 x 50) square feet of land in the location shown and described on Exhibit "B" (the "Premises"). LESSOR also grants and conveys to LESSEE nonexclusive

easements across the Property connecting the Premises with the nearest public right-of-way and public utility easement (as applicable), for (i) unrestricted vehicular and pedestrian access to the Premises and parking on the Property, as needed to install, operate and maintain LESSEE's communications facilities, seven (7) days a week, twenty-four (24) hours a day and (ii) installation, location, operation and maintenance of cable runs and utilities including, without limitation, telephone and electric utilities, all as shown and described on Exhibit "B". In the event any public utility is unable to use the aforementioned easement, LESSOR has agreed to grant an additional easement either to LESSEE or to the public utility at no cost to LESSEE.

3. The terms, covenants and provisions of the Agreement are hereby incorporated by reference into this Memorandum and shall extend to and be binding upon the respective executors, administrators, heirs, successors and assigns of LESSOR and LESSEE.

[Remainder of Page Left Blank, Signature Page to Follow]

IN WITNESS WHEREOF, LESSOR and LESSEE have caused this Memorandum to be duly executed on the date first written hereinabove.

LESSOR:

City of Sanibel

By: _____
Carla Brooks Johnston, Mayor
800 Dunlop Road
Sanibel, Florida 33957

ATTEST: _____
Pamela Smith, City Clerk

APPROVED AS TO FORM:

_____
Kenneth B. Cuyler, City Attorney

Date: _____

LESSEE:

VERIZON WIRELESS PERSONAL COMMUNICATIONS LP
d/b/a VERIZON WIRELESS

BY:_____
Hans F. Leutenegger
Area Vice President – Network,
South Area

STATE OF _____)
) **ACKNOWLEDGMENT**
COUNTY OF _____)

I, _____, a Notary Public for said County and State, do hereby certify that Carla Brooks Johnston personally came before me this day and acknowledged that she is the Mayor of the City of Sanibel, and that she, as Mayor, being authorized to do so, executed the foregoing **MEMORANDUM OF LEASE AGREEMENT** on behalf of the City of Sanibel.

WITNESS my hand and official Notarial Seal, this ___ day of _____, 2006.

_____
Notary Public

My Commission Expires:
_____

(Notary Seal)

STATE OF _____)
) **ACKNOWLEDGMENT**
COUNTY OF _____)

I, _____, a Notary Public for said County and State, do hereby certify that **Hans F. Leutenegger** personally came before me this day and acknowledged that he is the Area Vice President - Network, South Area of **VERIZON WIRELESS PERSONAL COMMUNICATIONS LP** d/b/a Verizon Wireless, and that he, as Area Vice President - Network, South Area, being authorized to do so, executed the foregoing **MEMORANDUM OF LEASE AGREEMENT** on behalf of **VERIZON WIRELESS PERSONAL COMMUNICATIONS LP** d/b/a Verizon Wireless.

WITNESS my hand and official Notarial Seal, this ___ day of _____, 2006.

_____
Notary Public

My Commission Expires:
_____

(Notary Seal)

EXHIBIT A

TO MEMORANDUM OF LEASE

EXHIBIT B

TO MEMORANDUM OF LEASE

109813_v5

EXHIBIT "D"

(OWNERS APPROVED EQUIPMENT SHALL BE SET FORTH ON THIS EXHIBIT WHEN APPROVED PURSUANT TO SECTION 4(C) OF THIS LEASE)

City of Sanibel

800 Dunlop Road
Sanibel, Florida 33957-4096

www.mysanibel.com

AREA CODE - 239

Y COUNCIL	472-4135
MINISTRATIVE	472-3700
LDING	472-4555
ERGENCY MANAGEMENT	472-3111
ANCE	472-9615
AL	472-4359
RKS & RECREATION	472-9075
NNING	472-4136
ICE	472-3111
BLIC WORKS	472-6397
LITIES	472-1008

May 19, 2006

Robert M. Motes, Esq.
Holland & Knight LLP
One East Broward Blvd.
Suite 1300
Fort Lauderdale, FL 33301

RE: Verizon Lease Agreement / Site: 68907-Wulfert Road WWTP

Dear Mr. Motes:

Enclosed please find a fully executed original Lease Agreement and Memorandum of Lease Agreement for your records.

Please feel free to contact this office if you have any questions.

Sincerely,

Kenneth B. Cuyler
City Attorney

KBC/jg

Enclosures

cc: Pamela Smith, City Clerk

Recycled paper

Upon Recording, Return to:

Robert M. Motes, Esq.
Holland & Knight LLP
One East Broward Boulevard
Suite 1300
Fort Lauderdale, Florida 33301

STATE OF FLORIDA)
)
COUNTY OF LEE)

MEMORANDUM OF LEASE AGREEMENT

This Memorandum of Lease Agreement is made this 18 day of May, 2006, between **CITY OF SANIBEL**, with a mailing address of 800 Dunlop Road, Sanibel, Florida 33597, hereinafter collectively referred to as "LESSOR", and **VERIZON WIRELESS PERSONAL COMMUNICATIONS LP** d/b/a Verizon Wireless, with its principal office located at 180 Washington Valley Road, Bedminster, New Jersey 07921, hereinafter referred to as "LESSEE". LESSOR and LESSEE are at times collectively referred to hereinafter as the "Parties" or individually as the "Party".

1. LESSOR and LESSEE entered into a Lease Agreement (the "Agreement") on MAY 18, 2006 for an initial term of five (5) years, commencing on the Commencement Date (defined in the Agreement to be the first day of the month after the date LESSEE begins construction of its communications tower on the Premises). The Agreement shall automatically be extended for three (3) additional five (5) year terms unless the LESSEE terminates it at the end of the then current five (5) year term by giving the LESSOR written notice of the intent to terminate at least one hundred eighty (180) days prior to the end of the then current five (5) year term.

2. LESSOR owns certain real property and the improvements thereon commonly known as 2222 Wulfert Road, City of Sanibel, County of Lee, State of Florida (the "Property") as described on the attached Exhibit "A". LESSOR hereby leases and demises to LESSEE a portion of the Property comprised of approximately 2,500 (50 x 50) square feet of land in the location shown and described on Exhibit "B" (the "Premises"). LESSOR also grants and conveys to LESSEE nonexclusive easements across the Property connecting the Premises with the nearest public

right-of-way and public utility easement (as applicable), for (i) unrestricted vehicular and pedestrian access to the Premises and parking on the Property, as needed to install, operate and maintain LESSEE's communications facilities, seven (7) days a week, twenty-four (24) hours a day and (ii) installation, location, operation and maintenance of cable runs and utilities including, without limitation, telephone and electric utilities, all as shown and described on Exhibit "B". In the event any public utility is unable to use the aforementioned easement, LESSOR has agreed to grant an additional easement either to LESSEE or to the public utility at no cost to LESSEE.

3. The terms, covenants and provisions of the Agreement are hereby incorporated by reference into this Memorandum and shall extend to and be binding upon the respective executors, administrators, heirs, successors and assigns of LESSOR and LESSEE.

[Remainder of Page Left Blank, Signature Page to Follow]

IN WITNESS WHEREOF, LESSOR and LESSEE have caused this Memorandum to be duly executed on the date first written hereinabove.

LESSOR:

City of Sanibel

By: _____
~~Carla Brooks Johnston, Mayor~~
800 Dunlop Road
Sanibel, Florida 33957
Mick Denham, VIce Mayor

ATTEST: _____
Pamela Smith, City Clerk

APPROVED AS TO FORM:

_____
Kenneth B. Cuyler, City Attorney

Date: 5/18/06

LESSEE:

VERIZON WIRELESS PERSONAL COMMUNICATIONS LP
d/b/a VERIZON WIRELESS

BY: _____
Hans F. Leutenegger
Area Vice President – Network,
South Area

FINANCIAL SUFFICIENCY APPROVED
5/18/06
Renee M. Lynch, FINANCE DIRECTOR

STATE OF FLORIDA)
) **ACKNOWLEDGMENT**
COUNTY OF LEE)

I, JULIA K. GUERNSEY, a Notary Public for said County and State, do hereby certify that ~~Carla Brooks Johnston~~ personally came before me this day and acknowledged that she is the ~~Mayor~~ MICK DENHAM of the City of Sanibel, and that ~~she~~ HE, as ~~Mayor~~ VICE MAYOR, VICE MAYOR being authorized to do so, executed the foregoing **MEMORANDUM OF LEASE AGREEMENT** on behalf of the City of Sanibel.

WITNESS my hand and official Notarial Seal, this 18 day of MAY, 2006.

Julia K. Guernsey
Commission # DD451786
Expires September 10, 2009
Bonded Troy Fain - Insurance, Inc 800-385-7019

Julia K.
Notary Public

My Commission Expires:
9/10/2009

(Notary Seal)

STATE OF North Carolina)
) **ACKNOWLEDGMENT**
COUNTY OF Mecklenburg)

I, **Catharine Lawson**, a Notary Public for said County and State, do hereby certify that **Hans F. Leutenegger** personally came before me this day and acknowledged that he is the Area Vice President - Network, South Area of **VERIZON WIRELESS PERSONAL COMMUNICATIONS LP** d/b/a Verizon Wireless, and that he, as Area Vice President - Network, South Area, being authorized to do so, executed the foregoing **MEMORANDUM OF LEASE AGREEMENT** on behalf of **VERIZON WIRELESS PERSONAL COMMUNICATIONS LP** d/b/a Verizon Wireless.

WITNESS my hand and official Notarial Seal, this 8 day of May, 2006.

Catharine Lawson
Notary Public

My Commission Expires:
1/4/2010

(Notary Seal)

OFFICIAL SEAL
Notary Public, North Carolina
County of Cabarrus
CATHARINE LAWSON
My Commission Expires January 4, 2010

EXHIBIT "A"

DESCRIPTION OF OWNER'S PROPERTY

A PORTION OF GOVERNMENT LOT 7, SECTION 12, TOWNSHIP 46 SOUTH, RANGE 21 EAST, LEE COUNTY, FLORIDA, BEING MORE PARTICULARLY DESCRIBED AS FOLLOWS:

COMMENCE AT THE SOUTHWEST CORNER OF SAID GOVERNMENT LOT 7, THENCE S88°58'04"E ALONG THE SOUTHERLY BOUNDARY OF SAID GOVERNMENT LOT 7 A DISTANCE OF 807.27 FEET TO THE POINT OF BEGINNING, SAID POINT LYING ON THE ARC OF A NON-TANGENT CIRCULAR CURVE CONCAVE TO THE SOUTHWEST (A RADIAL LINE THROUGH SAID POINT BEARS S49°20'03"W); THENCE NORTHWESTERLY ALONG THE ARC OF SAID CURVE HAVING FOR ITS ELEMENTS A RADIUS OF 440.00 FEET, A CENTRAL ANGLE OF 04°18'16", A CHORD DISTANCE OF 33.05 FEET, A CHORD BEARING OF N42°49'05"W, AN ARC DISTANCE OF 33.06 FEET; THENCE N45°01'47"E A DISTANCE OF 36.42 FEET; THENCE N44°58'13"W A DISTANCE OF 110.00 FEET; THENCE S45°01'47"W A DISTANCE OF 50.39 FEET TO A POINT ON THE ARC OF A NON-TANGENT CIRCULAR CURVE CONCAVE TO THE SOUTHWEST (A RADIAL LINE THROUGH SAID POINT BEARS S31°14'58"W); THENCE NORTHWESTERLY ALONG THE ARC OF SAID CURVE HAVING FOR ITS ELEMENTS A RADIUS OF 440.00 FEET, A CENTRAL ANGLE OF 32°14'02", A CHORD DISTANCE OF 244.29 FEET, A CHORD BEARING OF N76°33'53"W, AN ARC DISTANCE OF 247.54 FEET; THENCE N05°18'27"W A DISTANCE OF 101.69 FEET; THENCE S84°41'33"W A DISTANCE OF 20.00 FEET; THENCE N05°18'27"W A DISTANCE OF 243.03 FEET; THENCE N57°23'58"E A DISTANCE OF 225.52 FEET; THENCE S41°45'25"E A DISTANCE OF 165.64 FEET; THENCE N75°25'57"E A DISTANCE OF 167.91 FEET; THENCE S55°08'30"E A DISTANCE OF 110.34 FEET; THENCE S31°55'32"W A DISTANCE OF 129.30 FEET; THENCE S55°00'26"E A DISTANCE OF 210.49 FEET; THENCE S68°52'10"E A DISTANCE OF 141.78 FEET; THENCE S49°15'28"E A DISTANCE OF 84.21 FEET; THENCE S32°[illegible]'[illegible]"W A DISTANCE OF 159.88 FEET TO A POINT ON THE SOUTHERLY BOUNDARY OF SAID GOVERNMENT LOT 7; THENCE WESTERLY ALONG THE SOUTHERLY BOUNDARY OF SAID GOVERNMENT LOT 7 A DISTANCE OF 369.84 FEET TO POINT OF BEGINNING.

SAID PARCEL CONTAINS 6.770 ACRES MORE OR LESS.

DESCRIPTION OF PROPOSED
LESSEE'S LEASED PROPERTY

A PORTION OF TRACT "A" OF THE SANCTUARY AT WULFERT POINT PHASE 1, AS SHOWN IN PLAT BOOK 50, PAGE 52 IN THE PUBLIC RECORDS OF LEE COUNTY, FLORIDA, (ALSO BEING A PORTION OF LANDS DESCRIBED IN OFFICIAL RECORDS BOOK 2405, PAGE 3508), MORE PARTICULARLY DESCRIBED AS FOLLOWS:

COMMENCE AT THE POINT OF BEGINNING OF THOSE LANDS DESCRIBED IN OFFICIAL RECORDS BOOK 2405, PAGE 3508 OF THE OFFICIAL PUBLIC RECORDS OF LEE COUNTY, FLORIDA; PROCEED SOUTH 89°58'04" EAST ALONG THE SOUTHERLY LINE OF SAID LANDS, A DISTANCE OF 157.52 FEET; THENCE NORTH 00°01'56" EAST, A DISTANCE OF 33.58 FEET TO THE POINT OF BEGINNING OF THE FOLLOWING DESCRIBED PARCEL; THENCE NORTH 04°10'53" EAST, A DISTANCE OF 50.00 FEET; THENCE SOUTH 85°49'07" EAST, A DISTANCE OF 50.00 FEET; THENCE SOUTH 04°10'53" WEST, A DISTANCE OF 50.00 FEET; THENCE NORTH 85°49'07" WEST, A DISTANCE OF 50.00 FEET TO THE POINT OF BEGINNING.

CONTAINING 2,500.0 SQUARE FEET, MORE OR LESS.

DESCRIPTION OF PROPOSED
ACCESS EASEMENT

A PORTION OF TRACT "A" OF THE SANCTUARY AT WULFERT POINT PHASE 1, AS SHOWN IN PLAT BOOK 50, PAGE 52 IN THE PUBLIC RECORDS OF LEE COUNTY, FLORIDA, (ALSO BEING A PORTION OF LANDS DESCRIBED IN OFFICIAL RECORDS BOOK 2405, PAGE 3508), MORE PARTICULARLY DESCRIBED AS FOLLOWS:

COMMENCE AT THE POINT OF BEGINNING OF THOSE LANDS DESCRIBED IN OFFICIAL RECORDS BOOK 2405, PAGE 3508 OF THE OFFICIAL PUBLIC RECORDS OF LEE COUNTY, FLORIDA; PROCEED SOUTH 89°58'04" EAST ALONG THE SOUTHERLY LINE OF SAID LANDS, A DISTANCE OF 157.52 FEET; THENCE NORTH 00°01'56" EAST, A DISTANCE OF 33.58 FEET TO THE POINT OF BEGINNING OF THE FOLLOWING DESCRIBED PARCEL; THENCE NORTH 61°57'52" WEST, A DISTANCE OF 131.58 FEET; THENCE NORTH 48°37'07" WEST, A DISTANCE OF 247.20 FEET; THENCE NORTH 60°09'04" WEST, A DISTANCE OF 35.87 FEET; THENCE SOUTH 78°40'57" WEST, A DISTANCE OF 169.63 FEET TO A POINT ON THE WESTERLY LINE OF LANDS DESCRIBED IN OFFICIAL RECORDS BOOK 2405, PAGE 3508, (ALSO BEING THE WESTERLY LINE OF TRACT "A", AS SHOWN IN PLAT BOOK 50, PAGE 52); THENCE NORTH 05°18'27" WEST ALONG SAID WESTERLY LINE, A DISTANCE OF 20.11 FEET; THENCE NORTH 78°40'57" EAST, A DISTANCE OF 179.28 FEET; THENCE SOUTH 60°09'04" EAST, A DISTANCE OF 45.52 FEET; THENCE SOUTH 48°37'07" EAST, A DISTANCE OF 246.83 FEET; THENCE SOUTH 61°57'52" EAST, A DISTANCE OF 123.67 FEET; THENCE SOUTH 04°10'53" WEST, A DISTANCE OF 20.05 FEET TO THE POINT OF BEGINNING.

CONTAINING 11,712.9 SQUARE FEET, MORE OR LESS.

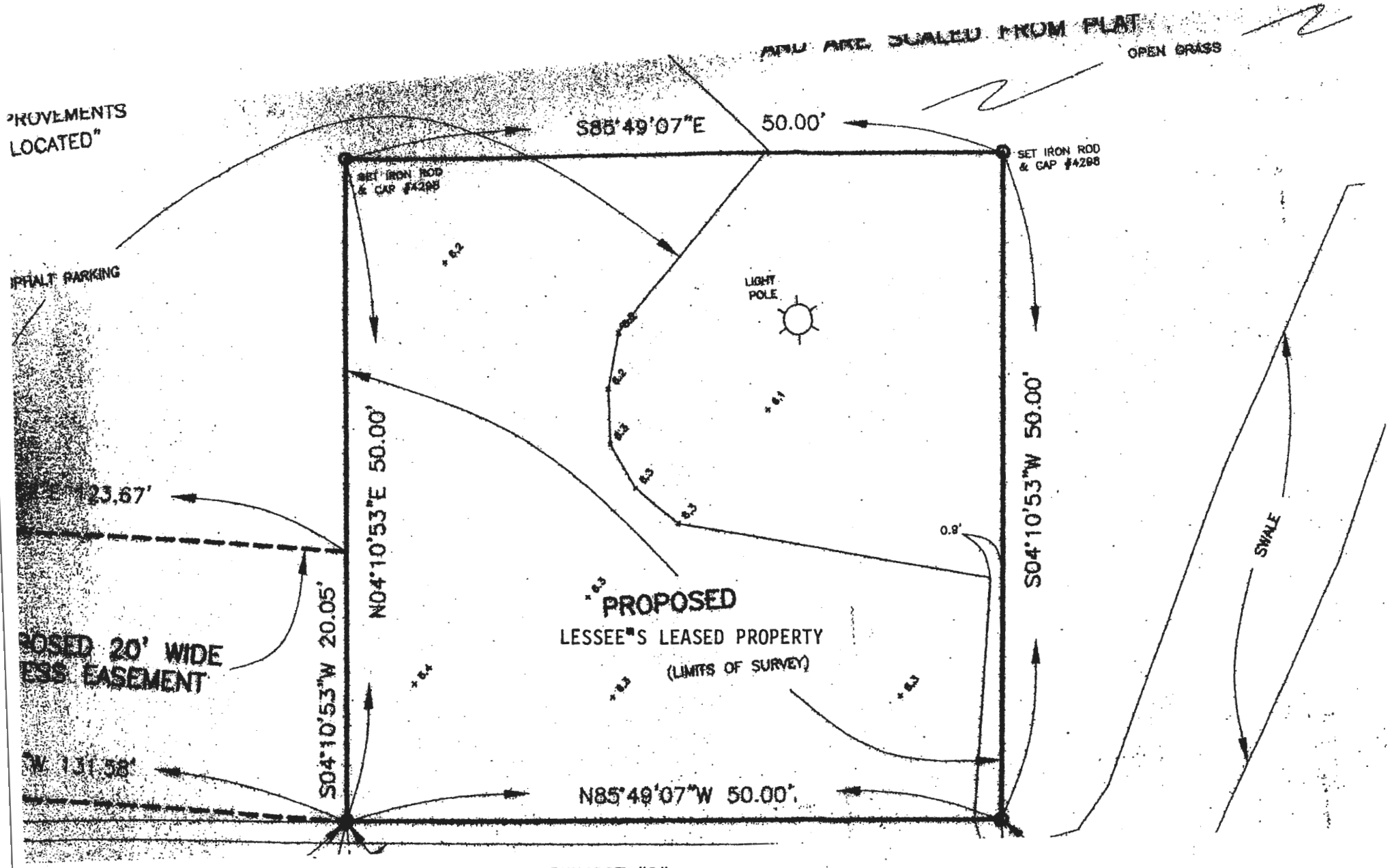

EXHIBIT "B"
Page 2 of 4

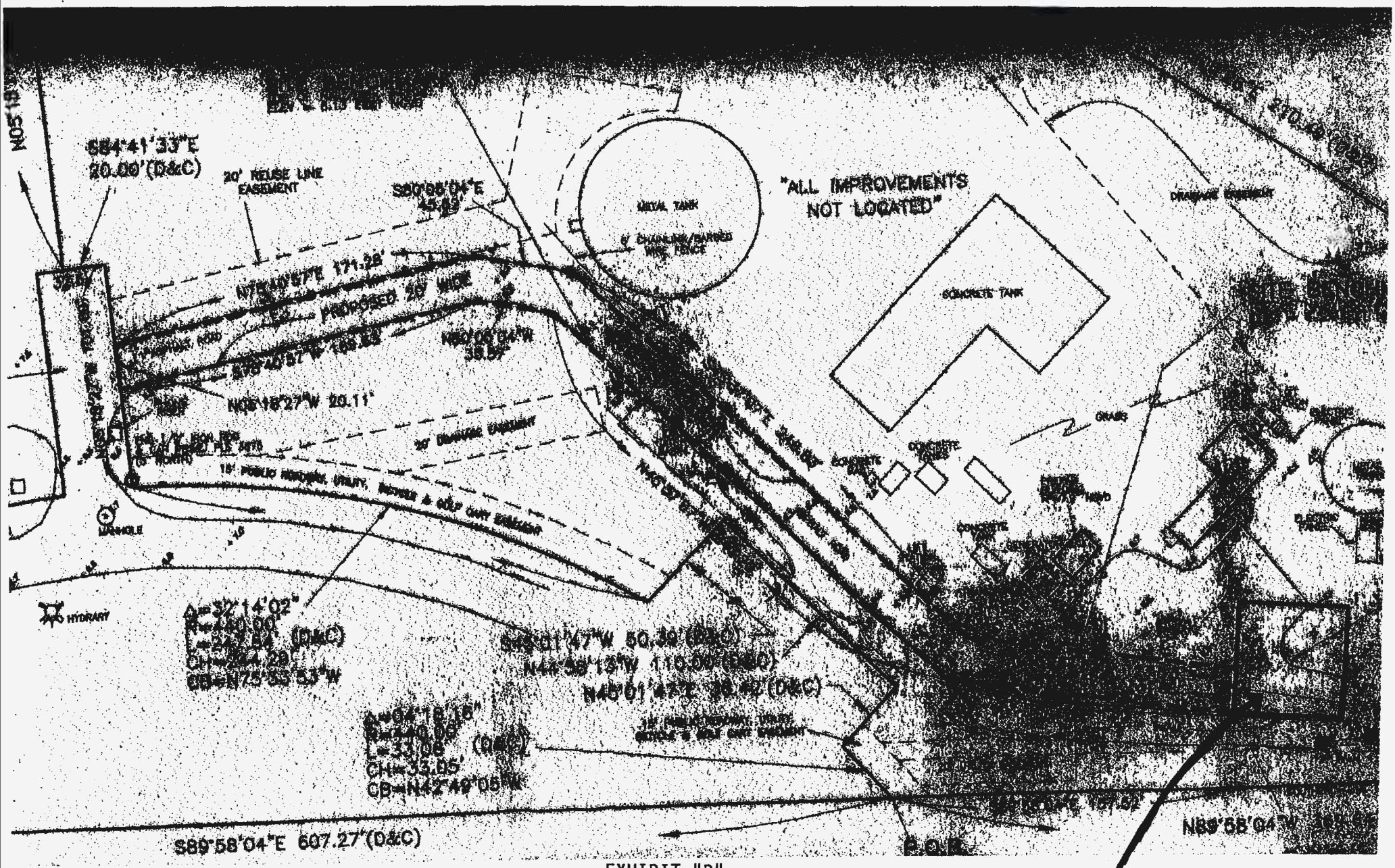

EXHIBIT "B"
Page 3 of 4

LESSEE'S LEASED PROPERTY

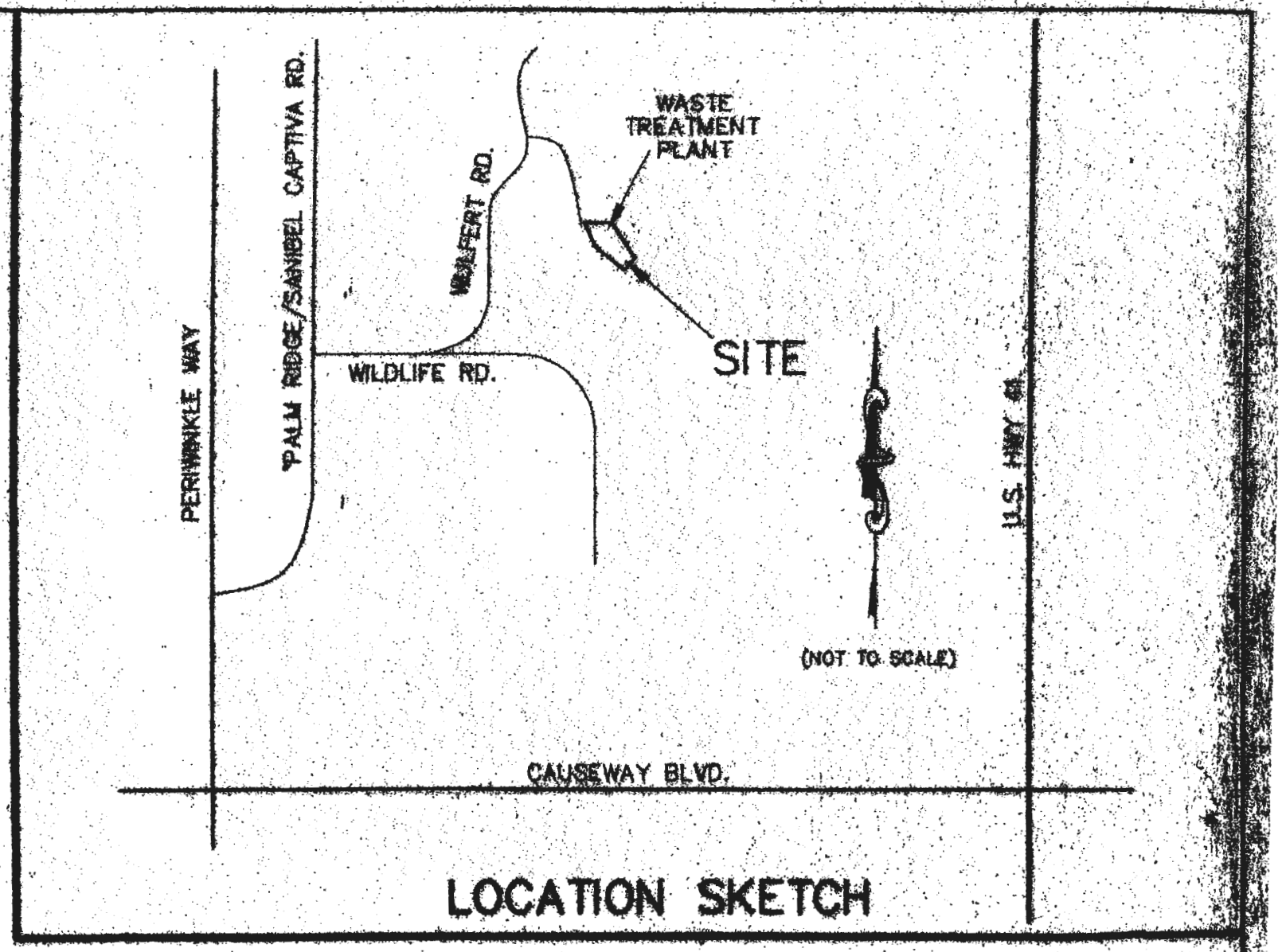
PERIWINKLE WAY
PALM RIDGE/SANIBEL CAPTIVA RD.
WILDLIFE RD.
WASTE TREATMENT PLANT
SITE
(NOT TO SCALE)
U.S. HWY 41
CAUSEWAY BLVD.
LOCATION SKETCH

CONTRACT 06 07

LEASE AGREEMENT
SITE: 68907 - Wulfert Road WWTP

THIS LEASE AGREEMENT ("Lease"), is made as of this 18 day of May, 2006, by and between CITY OF SANIBEL, ("Owner"), and VERIZON WIRELESS PERSONAL COMMUNICATIONS LP dba VERIZON WIRELESS, a Delaware limited partnership ("Lessee").

In consideration of the premises and of the mutual obligations and agreements in this Lease, the parties agree as follows:

1. **OWNER'S PROPERTY.** Owner represents and warrants that Owner is the title holder of that certain real property and the improvements thereon commonly known as 2222 Wulfert Road, City of Sanibel, County of Lee, State of Florida ("Owner's Property"), described on the attached Exhibit "A".

2. **LEASE OF PORTION OF OWNER'S PROPERTY; EASEMENTS ACROSS OWNER'S PROPERTY.**

A. Owner hereby leases and demises to Lessee a portion of Owner's Property comprised of approximately 2,500 (50 x 50) square feet of land in the location shown and described on Exhibit "B" ("Leased Property"). Owner also grants and conveys to Lessee nonexclusive easements across the Owner's Property connecting the Leased Property with the nearest public right-of-way and public utility easement (as applicable), for (i) unrestricted vehicular and pedestrian access to the Leased Property and parking on Owner's Property, as needed to install, operate and maintain Lessee's communications facilities, seven (7) days a week, twenty-four (24) hours a day and (ii) installation, location, operation and maintenance of cable runs and utilities including, without limitation, telephone and electric utilities, all as shown and described on Exhibit "B". In the event any public utility is unable to use the aforementioned easement, Owner hereby agrees to grant an additional easement either to Lessee or to the public utility at no cost to Lessee. The Leased Property including, without limitation, the access, cable run and utility easements, may be surveyed by a licensed surveyor, at Lessee's expense. Such survey and/or construction drawings, which shall not vary in any material respect from the easements and Leased Property shown in Exhibit "B", shall then replace Exhibit "B" and become a part hereof.

B. The City of Sanibel is leasing the Leased Property in its proprietary capacity, however, nothing in this Lease shall be construed to prohibit or in any way restrict the City of Sanibel, in its capacity as a local government, from enforcing any and all applicable laws within the City of Sanibel relating to the maintenance, construction and use of Lessee's communications tower. Further, Lessee's compliance with all City of Sanibel conditions of approval set forth in the development permit for Lessee's communication tower (hereinafter referred to as the "Approval Conditions") shall be considered conditions and covenants by Lessee of this Lease, incorporated herein by reference and enforceable under the terms of this Lease, as well. If after issuance of the development permit, Lessee is not satisfied (in Lessee's sole discretion) with the Approval Conditions, then Lessee may elect to terminate this Lease at any time prior to beginning physical construction of the Tower. Once Lessee has begun physical

construction of the Tower, the foregoing right of termination shall be deemed waived.

3. **USE OF THE LEASED PROPERTY.** Lessee and its sublessees and/or licensees may use the Leased Property for the installation, removal, securing, repair, replacement, maintenance and operation of a monopole communications tower (the "Tower") not to exceed One Hundred Forty-Nine (149') feet in height, as measured from the top of the Tower structure and not appurtenances thereon, and associated communications facilities which may include personal communications service, cellular, paging, radio, cable, and other communications facilities comprised of, without limitation, antenna arrays, dishes, cables, wires, equipment shelters, buildings, electronics equipment, generators, fuel tank(s), fencing, utility transformers and lines, cable runs, grounding systems, accessories, all as may be modified, added to or substituted from time to time, to the extent permitted in the applicable City of Sanibel ordinances. The Tower shall be designed and constructed in accordance with City of Sanibel Ordinance No. 99-07, codified in the Sanibel Land Development Code as Article XVII, Divisions 1 – 4, Sections 126-1511 through 126-1599, and the Approval Conditions. The final design of the Tower shall be subject to Owner's review and approval (which approval shall not be unreasonably withheld, delayed or conditioned). Further, during the Feasibility Period, as hereinafter defined, and throughout the Lease term, as may be extended, Lessee and its sublessees and/or licensees shall have the right to conduct Feasibility Tests on the Leased Property and Owner's Property, at Lessee's (or sublessee's or licensee's) sole expense.

4. **RESERVED TOWER SPACE.**

A. Owner, subject to the terms and conditions herein, shall have a non-revocable, exclusive license for the use of that portion of the Tower extending from one hundred thirty (130) feet to one hundred forty (140) feet (the "Reserved Tower Space") for the purpose of installing and operating its emergency communications equipment. Lessee shall have the right to substitute an equal amount of space at a location acceptable to Owner (in Owner's sole discretion) to the extent Owner has not exercised its right to use the Reserved Tower Space, and Lessee needs the Reserved Tower Space for its own operations. The substituted tower space shall be considered the Reserved Tower Space from that point forward. Under no circumstances shall Owner license or sublease any portion of the Reserved Tower Space to third parties, except a sublease may be granted by Owner to another government entity for the sole purpose of operating Owner's emergency, governmental and/or public safety communications as could otherwise be conducted by Owner hereunder. Additionally, Owner may sublease a portion of the Reserved Tower Space to a non-governmental entity provided such entity is using equipment on the Tower solely for the purpose of operating Owner's emergency, governmental and/or public safety communications as could otherwise be conducted by Owner hereunder and for no commercial purposes whatsoever. No part of the Leased Property shall be utilized by

Owner for the placement of any necessary ground equipment without prior written consent of Lessee (which consent can be granted or denied in Lessee's sole discretion), and Owner shall use its contiguous property for the placement of any necessary equipment.

B. Conditions for Use by Owner of Tower. Owner's equipment shall have Lessee's prior written approval, such approval not to be unreasonably withheld, delayed or conditioned, and shall be in accordance with the standards and requirements of Lessee, and shall be done under the Lessee's supervision and shall be subject to Lessee's final written approval, such approval not to be unreasonably withheld, delayed or conditioned. Owner will be responsible for the cost of Owner's initial equipment ("Owner's Initial Equipment") and the installation of that approved Owner's Initial Equipment. The supervision, approval and other activities of Lessee under this Paragraph, however, shall not constitute the waiver of any term or condition of this Lease. Scheduling of any and all work on the Leased Property and/or Tower will be coordinated with Lessee. Any future maintenance or access necessitating access by Owner to the Leased Property and/or Tower must be coordinated with Lessee within a reasonable time not less than seventy-two (72) hours prior to work being done, except that such coordination period shall be reduced accordingly based on emergency circumstances. All of Owner's equipment mounted on the Tower must be attached securely to the Tower with approved mounts, hangers, and clamps as directed by Lessee. Failure to comply with the terms and conditions of this Paragraph shall be cause for immediate notification of an Event of Default by Owner, which shall occur pursuant to the provisions of Section 12 of this Lease. Any inspection or approval given or done by Lessee pursuant to this Lease is solely for its own benefit. Lessee shall have no liability or responsibility to the Owner or any third party as a result of any inspection or approval given by Lessee and Owner should not rely upon the same other than for the specific purposes set forth herein.

C. Approved Equipment. Any such approved equipment shall be set forth on Exhibit "D" attached hereto and incorporated herein. Owner shall be required to submit an application to Lessee on a form to be provided by Lessee. Grounds for denying approval shall include, but shall not be limited to, the potential for overstressing the Tower taking into account the present loading on the Tower and the anticipated additional loading by Lessee on the Tower. Lessee shall make its analysis of Owner's application based on best engineering and management practices, but Owner's application shall not be unreasonably denied, delayed or conditioned. Further, in the event that Owner's application is denied by Lessee, there shall be a presumption that any further equipment attached to the Tower by any party, including Lessee, will overstress the Tower and no further equipment shall be added by any party, including Lessee, until Lessee establishes that such additional equipment can be appropriately added without overstressing the Tower when Owner's equipment was denied. If Lessee approves of Owner's application but conditions its approval on Owner making certain Tower modifications in

order to avoid overstressing of the Tower, and Owner refuses to make such modifications, then Lessee or another user of the Tower shall be permitted to add equipment to the Tower if (i) the conditions of the immediately preceding sentence are satisfied or (ii) overstressing of the Tower would result from the additional equipment and Lessee or such other user is willing to make the necessary Tower modifications to avoid overstressing of the Tower. To the extent Owner's approved equipment has not been decided upon between the parties prior to the execution of this Lease, at such time as Owner's application is submitted and approved by Lessee, and signed by both parties, it will be attached as Exhibit "D" to all original copies of this Lease.

D. Maintenance of Owner's Equipment. All of Owner's equipment shall be purchased and installed at the expense of Owner, and all of Owner's equipment, including, but not limited to, Owner's Initial Equipment, must be kept and maintained by Owner at all times, at its expense, in a good state of repair and maintenance and in compliance with all applicable Rules and Regulations of the Federal Communications Commission, Federal Aviation Agency and all applicable codes and regulations of the municipality, county and state concerned. Under this Lease, Lessee assumes no responsibility for the licensing, operation, and/or maintenance of Owner's radio equipment. To the extent permitted by law, Owner shall defend, indemnify and save Lessee harmless from any claims or suits arising by reason of Owner's failure to so keep and maintain its equipment or to comply with such laws, rules or regulations.

E. Approval of Contractors. It is further understood and agreed Lessee must approve of, in writing, all contractors and personnel chosen by Owner to install, maintain and operate the Owner's equipment and that Owner's maintenance and operation of its equipment will in no way damage or interfere with the Lessee's use of the Leased Property, Tower, antennae and appurtenances. Lessee's approval of such contractors and personnel shall not be unreasonably withheld, delayed or conditioned.

F. Owner shall have the option to utilize the Reserved Tower Space during the initial five (5) year term of this Lease. To the extent Owner has not filed an application with Lessee to utilize the Reserved Tower Space prior to the expiration of the initial term of this Lease, Owner shall lose its rights in and to the Reserved Tower Space, and Lessee shall be free to use the same for its own purposes or to sublease or license the same to third parties.

5. **FEASIBILITY PERIOD.** The period of time commencing on the date that this Lease has been executed by both Owner and Lessee ("Execution Date") until the earlier of (i) the date that Lessee commences installation of Lessee's communications facilities on the Leased Property or (ii) sixty (60) days from the Execution Date, shall be referred to herein as the "Feasibility Period". Upon two (2) business days notice to Owner, delivered in accordance with Paragraph 22 of this Lease, Lessee, its agents and contractors shall have the right to enter

upon the Owner's Property between 8:00 A.M. and 5:00 P.M._during the Feasibility Period to conduct tests and studies (collectively, "Feasibility Tests"), at Lessee's expense, to determine the suitability of the Leased Property for Lessee's communications facilities and intended use. The Feasibility Tests may include, without limitation, surveys, soils tests, environmental assessments and radio wave propagation measurements. Lessee shall restore the Owner's Property to its original condition, reasonable wear and tear excepted, and at its sole expense upon completion of such Feasibility Tests. In consideration of Owner granting Lessee the right to conduct Feasibility Tests during the Feasibility Period, Lessee agrees to pay Owner the sum of One Hundred Dollars ($100.00) within thirty (30) days of the Execution Date. If Lessee determines in Lessee's sole and absolute discretion, that the Leased Property is not suitable for Lessee's communications facilities or intended use after conducting any of such Feasibility Tests, Lessee shall have the right to terminate this Lease in accordance with the Provisions of Paragraph 9, prior to the end of the Feasibility Period. From and after the Execution Date, the provisions of this Lease shall be in effect except that the Lease term and obligation to pay rent shall not commence until the Commencement Date. Except as otherwise provided herein, the "Commencement Date" shall be defined as the date that is the first day of the month after the date Lessee begins construction of the Tower. No construction or installation shall occur (other than Feasibility Tests) prior to the date Lessee is granted a development permit and building permit by the City of Sanibel. To the extent that any suit, appeal or other proceeding instituted by third parties against Owner and/or Lessee delays the construction of the Tower or Lessee's ability to operate its equipment from the Tower once constructed, notwithstanding the obtaining of a building permit by Lessee, the Commencement Date shall not occur until the resolution of any such suit, appeal or proceeding, with finality, such date as shall be agreed upon by the parties for purposes of certainty.

6. **TERM; AND EXTENSIONS.**

A. Initial Term. This Lease shall be for an initial term of five (5) years and zero (0) months beginning on the Commencement Date.

B. Extensions. This Lease shall automatically be extended on the same terms and conditions (other than the annual rent which shall escalate in accordance with the provisions of Paragraph 7) for three (3) additional, successive five (5) year extension periods unless Lessee gives Owner written notice of Lessee's intention not to extend this Lease at least one hundred eighty (180) days prior to the end of the then-current term.

7. **RENT.**

A. Initial Rent. Annual rent shall be paid in equal monthly installments in advance beginning on the Commencement Date and on first (1st) day of each month thereafter to Owner at the address set forth for notices in Paragraph 22 or to such other address as Owner may advise Lessee, in writing, pursuant to the notice provisions of Paragraph 22. The annual rent shall be Twenty-Five Thousand and

00/100 Dollars ($25,000.00). The initial monthly rent payment shall be paid on or before the Commencement Date.

B. Escalations. Beginning on the first anniversary of the Commencement Date, and annually thereafter, the annual rent shall be an amount equal to the annual rent in effect for the immediately preceding one (1) year period, increased by three percent (3%).

C. Additional Rent.

(i) In the event Lessee subleases any portion of the Leased Property, any rental paid by any sublessee(s) shall be divided between Owner and Lessee in the following manner: 50% to Owner and 50% to Lessee. Lessee agrees that any such sublessee(s) shall be instructed to pay the foregoing percentage amounts directly to Owner and Lessee. Lessee shall not be responsible to Owner for the collection or payment of rents by the sublessee(s) to Owner, and Lessee shall have no liability to Owner in the event sublessee(s) fail to make such payment(s). Lessee will provide Owner with a tri-party agreement to be executed by Lessee, sublessee(s) and Owner to confirm the direct payment obligation from the sublessee(s) to Owner, to set forth Owner's remedies in the event of non-payment or late payment by sub-lessee and to indicate Owner has been notified of the sublease.

(ii) It is understood and agreed by the parties hereto that the foregoing rental percentage amounts shall only apply if Lessee is able to accommodate all of the ground space needs of such sublessee(s) facilities within the Leased Property. If Lessee is unable to accommodate all of the ground space needs of any such sublessee(s) within the Leased Property, then such sublessee(s) will be required to obtain the necessary ground space from Owner and will have to enter into a separate agreement with Owner for the necessary ground space within Owner's Property that sublessee(s) requires to locate its facilities. In this event, Lessee shall receive 100% of the rental or fees paid by such sublessee(s) to Lessee for the tower space being leased or licensed from Lessee, and Owner shall receive 100% of the rental or fees paid by such sublessee(s) to Owner for the ground space being leased or licensed from Owner.

8. **APPROVALS; UTILITIES.** Lessee, at Lessee's expense, shall be responsible for (i) obtaining all licenses, certificates, permits and other approvals required by any federal, state or local governmental or quasi-governmental authority for Lessee and its sublessees and/or licensees' use of the Leased Property and/or operation of their respective communications facilities thereon (collectively, "Approvals") and (ii) installing new utilities or upgrading existing utilities on the Leased Property and across the Owner's Property necessary for the operation of its communications facilities and paying for all utilities consumed by Lessee and its sublessees and/or licensees at the Leased Property. Lessee and its sublessees and/or licensees shall either separately meter or sub-meter all utilities consumed by Lessee and its sublessees and/or licensees. Owner agrees to cooperate with Lessee and its sublessees and/or licensees in obtaining

and/or maintaining, at no expense to Owner, such Approvals, utility services and easements reasonably required for Lessee's and its sublessees' and/or licensees' use of the Leased Property and/or operation of their respective communications facilities thereon, including, without limitation, the execution of all documents reasonably required for such Approvals, utility services and easements, provided such documents are not inconsistent with the terms of this Lease.

9. **TERMINATION.** Lessee shall have the right to terminate this Lease at any time without further liability hereunder if Lessee determines that any one (1) or more of the following events is occurring or has occurred:

A. Approvals and/or Easement Not Obtainable. All Approvals and/or easements for Lessee's intended use of, or operation or construction of its communications facilities on, the Leased Property cannot be obtained by the Commencement Date; or

B. Approvals and/or Easements Cancelled. Any Approval and/or easement for Lessee's intended use of, or operation or construction of its communications facilities on, the Leased Property is canceled, withdrawn, terminated or denied or expires or lapses; or

C. Ownership; Authority. Owner does not have legal or sufficient ownership of the Leased Property or the authority to enter into this Lease; or

D. Hazardous Material. Within thirty (30) days of learning that the Owner's Property contains a Hazardous Material, as defined in Paragraph 14, not introduced to the Property by Lessee or one of its sublessees or licensees and not discovered or discoverable during the performance of a Phase I environmental study of the Property during the Feasibility Period; or

E. Title. The status of the title to the Leased Property is unacceptable, in Lessee's sole discretion, prior to the Commencement Date; or

F. Feasibility. Based on the results of any Feasibility Tests conducted during the Feasibility Period, the Leased Property is not suitable for Lessee's intended use or the operation or construction of its communications facilities, in Lessee's sole and absolute discretion.

G. Technical Compatibility. Lessee determines that the Leased Property is no longer technically compatible for its intended use.

H. Annual Termination. Upon each annual anniversary of the Commencement Date, provided Lessee has notified Lessor in writing pursuant to Section 22 of this Lease of Lessee's intent to terminate at least 120 days prior to such termination.

I. Loss of Approvals. In the event any Approval necessary for Lessee's continued operations at the Leased Property is canceled through no fault of Lessee.

J. Other. In the event construction of the Tower or Lessee's

ability to operate its equipment from the Tower once constructed is delayed due to any suit, appeal or other proceeding instituted by third parties against Owner and/or Lessee, and Lessee determines that resolution of any such suit, appeal or proceeding, with finality, will not occur in a timely manner.

Under any of the above circumstances, Lessee may terminate this Lease by giving Owner written notice thereof delivered in accordance with the provisions of Paragraph 22. If Lessee elects to terminate this Lease pursuant to this Paragraph 9, this Lease shall terminate as of the date set forth in the notice of termination sent by Lessee to Owner, which date shall not be more than one hundred twenty (120) days from the date of such notice. Within thirty (30) days after such termination, Owner shall pay to Lessee any prepaid annual rent that has not accrued as of the date of such termination. Owner's obligation to pay the foregoing rental amount shall survive termination of this Lease.

10. **ASSIGNMENT; SUBLEASE; LICENSE.**

A. This Lease may be sold, assigned or transferred by Lessee without any approval or consent of Owner to Lessee's principal(s), affiliates, or any subsidiary of Lessee, its principal(s) or affiliates; to any entity which acquires all or substantially all of Lessee's assets in the market defined by the Federal Communications Commission in which the Owner's Property is located by reason of a merger, acquisition or other business reorganization; or to any entity which acquires or receives an interest in the majority of communication towers of Lessee in the market defined by the Federal Communications Commission in which the Owner's Property is located. As to other parties, this Lease may not be sold, assigned or transferred without the written consent of Owner, which such consent will not be unreasonably withheld, delayed or conditioned. No such assignment to third parties shall relieve Lessee of its obligations hereunder for the remaining portion of the then-current lease term. Further, any such sale, assignment or transfer, even made with the written consent of Owner, shall be made specifically subject to all applicable City of Sanibel Ordinances, Resolutions and the Approval Conditions.

B. Notwithstanding the foregoing, Lessee may sublease any portion of the Leased Property at its sole discretion, upon notice to Owner, provided that such sublease complies with all applicable requirements of City of Sanibel Ordinance 99-07, codified in the Sanibel Land Development Code as Article XVII, Divisions 1 – 4, Sections 126-1511 through 126-1599, and the Approval Conditions. Any sublease that is entered into by Lessee shall be subject to the provisions of this Lease and shall be binding upon the successors, assigns, heirs and legal representatives of the respective parties hereto. To the extent that any renewal periods under this Lease are included in the term of any such sublease, the sublease shall be conditioned on the extension of this Lease, and shall automatically terminate upon the non-renewal, expiration or early termination of this Lease. The term "sublease", "sublet", "sublessee" and any other similar term shall apply to any situation

by which Lessee allows a third party use of the Leased Property for co-location, whether it be by formal sublease, license or other agreement. All rights and responsibilities of Lessee set forth in this Lease shall be enjoyed by and binding on any sublessee. Such sublease shall not act to relieve Lessee of its obligations hereunder.

C. Material to Owner's decision to enter into this Lease is Lessee's representation and warranty that it will comply with all applicable provisions of City Ordinance 99-07, and the Approval Conditions including, but not limited to, the obligation to allow for co-location on the Tower constructed on the Leased Property at reasonable rates and subject to the terms hereof. Provided that Lessee is not in violation of these or any other requirements of the Ordinance, Lessee shall have the sole right to determine whether it will allow any specific sublessee, other than Owner, to co-locate on the Tower.

11. INDEMNIFICATION AND INSURANCE.

A. Indemnification by Lessee. Lessee hereby agrees to indemnify and hold Owner and Owner's officials, partners, affiliates, agents and employees harmless from and against any and all liabilities, claims, demands, action, losses, damages, orders, penalties, costs and/or expenses including, without limitation, reasonable attorneys fees and costs resulting from: (i) personal injury or property damage arising out of the acts or omissions of Lessee, its agents and/or employees in any way relating to the Leased Property; (ii) Lessee's breach of any covenants or provisions of this Lease to be observed or performed by Lessee and failure to cure such breach after the expiration of all applicable cure periods; (iii) any damages or causes of action arising out of or relating to Lessee's, or any of its sublessees' or licensees' use of the Leased Property or Owner's Property under this Lease; and/or (iv) personal injury or property damage (subject to the waiver of subrogation set forth in Paragraph 11.D. below) arising out of a failure or collapse, for any reason, of the Tower or attached facilities (except any of Owner's equipment) to be constructed on the Leased Property. Notwithstanding any of the foregoing, Lessee shall have no obligation to indemnify and hold Owner and Owner's officials, partners, affiliates, agents and employees harmless from and against any liabilities, claims, demands, actions, losses, damages, orders, penalties, costs and/or expenses resulting solely from the acts or omissions of Owner, its officials, partners, affiliates, agents or employees. The obligations of Lessee under this Paragraph 11.A shall survive termination or expiration of this Lease.

B. Lessee's Insurance. Lessee shall carry comprehensive general liability insurance with limits of liability thereunder of not less than $2.5 million combined single limit for bodily injury and/or property damage, including coverage for contractual liability (subject to standard policy exclusions). Such insurance shall name Owner, as an additional insured with respect to the Leased Property and related easements, shall be issued by an insurance company authorized to do business in the state in which the Leased Property is located and shall provide thirty (30) days prior written notice to Owner of any cancellation of

such policy. On or before the Commencement Date, Lessee shall deliver to Owner a certificate evidencing that such insurance is in effect, and, thereafter, within ten (10) business days of Owner's request for any such certificate. Any insurance required to be provided by Lessee under this Paragraph 11.B. may be provided by a blanket insurance policy covering the Leased Property and easements and other properties of Lessee, provided such blanket insurance policy complies with all of the other requirements of this Lease with respect to the type and amount of insurance required.

C. Owner's Insurance. To the extent permitted by law, Owner shall carry comprehensive general liability insurance with limits of liability thereunder of not less than $2.5 million combined single limit for bodily injury and/or property damage, including coverage for contractual liability (subject to standard policy exclusions), covering Owner's Property. Such insurance shall be issued by an insurance company authorized to do business in the state in which the Owner's Property is located. On or before the Commencement Date, Owner shall deliver to Lessee a certificate evidencing that such insurance is in effect, and, thereafter, within ten (10) business days of Lessee's request for any such certificate. Any insurance required to be provided by Owner under this Paragraph 11.C. may be provided by a blanket insurance policy covering the Owner's Property and other properties of Owner, provided such blanket insurance policy complies with all of the other requirements of this Lease with respect to the type and amount of insurance required.

12. EVENT OF DEFAULT.

A. Event of Default by Lessee. The occurrence of any one (1) or more of the following events shall constitute an "Event of Default" hereunder by Lessee:

(i) The failure by Lessee to make any payment of rent or any other payment required to be made by Lessee hereunder, as and when due, where such failure continues for a period of fifteen (15) days after Lessee's receipt of written notice thereof from Owner.

(ii) The failure by Lessee to observe or perform any of the covenants or provisions of this Lease to be observed or performed by Lessee, other than as specified in Paragraph 12.A.(i), where such failure continues for a period of thirty (30) days after Lessee's receipt of written notice thereof from Owner; provided, however, that it shall not be an Event of Default by Lessee if Lessee commences to cure such failure within such thirty (30) day period and thereafter diligently and expeditiously prosecutes such cure to completion.

B. Event of Default by Owner. The occurrence of any one (1) or more of the following events shall constitute an Event of Default hereunder by Owner:

(i) The failure by Owner to observe or perform any of the covenants or provisions of this Lease to be observed or performed by Owner, where such failure continues for a

period of thirty (30) days after written notice thereof is given to Owner, provided, however, that it shall not be an Event of Default by Owner if Owner commences to cure such failure within such thirty (30) day period and thereafter diligently and expeditiously prosecutes such cure to completion, provided, further, Owner shall not be granted more than thirty (30) days to cure a monetary breach of this Lease.

(ii) If Owner defaults or an event of default occurs under any mortgage, deed of trust, any lease under which Owner holds title to any portion of Owner's Property, or any other similar encumbrance and such default or event of default adversely affects Lessee's and/or its sublessees' and/or licensees' use of the Lease Property or the operation of Lessee's and/or its sublessees' and/or licensees' communications facilities on the Leased Property.

(iii) A voluntary or involuntary petition in bankruptcy is filed by or against Owner, or Owner becomes insolvent (meaning, unable to pay his, her or its debts as they become due), or Owner makes a transfer or conveyance in constructive or actual fraud of creditors or makes a general arrangement or general assignment for the benefit of creditors.

C. Remedies Upon Default. If an Event of Default occurs by Lessee or Owner, the non-defaulting party shall have all remedies available to it in law or equity, including without limitation the right to terminate this Lease. In the event Lessee terminates this Lease due to an Event of Default by Owner, then within thirty (30) days after such termination, Owner shall pay to Lessee any prepaid annual rent that has not accrued as of the date of such termination. Owner's obligation to pay the foregoing rental amount shall survive termination of this Lease.

13. **SALE OR TRANSFER BY OWNER.** Should Owner, at any time during the term of this Lease, as may be extended, sell, lease, transfer or otherwise convey all or any portion of Owner's Property to any transferee other than Lessee, such sale, lease, transfer or other conveyance shall be subject to this Lease and all of Lessee's rights hereunder.

14. **HAZARDOUS SUBSTANCES.**

A. Lessee shall undertake an environmental study, at Lessee's sole expense, during the Feasibility Period, to the extent necessary to satisfy itself with respect to the presence of any Hazardous Substances on or near the Leased Property. Lessee hereby agrees that it will not use, store or dispose of any Hazardous Substances at or near the Leased Property in violation of any applicable federal, state or local laws or regulations. For purpose of this provision, "Hazardous Substances" include any substance identified as hazardous, toxic, or dangerous in any applicable federal, state, or local law or regulation, including petroleum products. Lessee agrees to indemnify and hold Owner harmless from any cost, liability or expense (including without limitation, cost of cleanup or fines, reasonable attorney fees, and court or administrative proceedings) incurred on account of contamination of the Owner's Property or Leased Property by any

Hazardous Substance used, stored or disposed of by Lessee. Lessee's obligations under this Paragraph 14 shall survive the termination, for any reason, or expiration of this Lease.

B. Owner represents and warrants that it has no knowledge of any Hazardous Substances on the Owner's Property, except those substances and materials which are used, regularly or intermittently, as part of Owner's municipal sewage treatment plant operation located on Owner's Property, which is acknowledged by Lessee to be the primary and ongoing use for Owner's_Property. Owner shall be responsible for all obligations of compliance with any and all environmental and industrial hygiene laws, including any regulations, guidelines, standards, or policies of any governmental authorities regulating or imposing standards of liability or standards of conduct with regard to any environmental or industrial hygiene conditions or concerns as may now or at any time hereafter be in effect, that are or were in any way related to activity now conducted in, on, or in any way related to the Owner's Property, unless such conditions or concerns are caused by the activities of Lessee. To the extent permitted by law, Owner shall hold Lessee harmless and indemnify Lessee from and assume all duties, responsibility and liability at Owner's sole cost and expense, for all duties, responsibilities, and liability (for payment of penalties, sanctions, forfeitures, losses, costs, or damages) and for responding to any action, notice, claim, order, summons, citation, directive, litigation, investigation or proceeding which is in any way related to: (i) Owner's failure to comply with any environmental or industrial hygiene law, including without limitation any regulations, guidelines, standards, or policies of any governmental authorities regulating or imposing standards of liability or standards of conduct with regard to any environmental or industrial hygiene concerns or conditions as may now or at any time hereafter be in effect, unless such compliance results from conditions caused by Lessee; and (ii) any environmental or industrial hygiene conditions arising out of or in any way related to the condition of the Owner's Property or activities conducted thereon, unless such environmental conditions are caused by Lessee. Owner's obligations under this Paragraph 14 shall survive the termination, for any reason, or expiration of this Lease.

15. **CONDEMNATION.**

A. Entire Condemnation. In the event the whole of Owner's Property, including, without limitation, the Leased Property, shall be permanently taken or condemned for public purposes, or sold to a condemning authority under threat of condemnation to prevent taking, this Lease shall automatically terminate as of the day of the taking, condemnation or sale.

B. Partial Condemnation. In the event any portion of the Leased Property shall be permanently taken or condemned for public purposes, or sold to a condemning authority under threat of condemnation to prevent taking, and as a result of such taking, condemnation or sale, Lessee determines, in its sole discretion, that it can not continue operation of its communications facilities, then Owner agrees that

Lessee may use and/or construct upon an alternate portion of Owner's Property which is equally suitable for Lessee's purposes, provided such alternate portion is available and will not interfere with Owner's other use of Owner's Property at that time. The location of the alternate portion of Owner's Property to which Lessee may relocate shall be mutually determined by Owner and Lessee. If an alternate portion of Owner's Property is available and acceptable to both Owner and Lessee, then Owner and Lessee shall enter into an amendment to this Lease designating such alternate portion of Owner's Property as the Leased Property. In the event no alternate portion of the Owner's Property is agreeable to both Lessee and Owner, this Lease shall automatically terminate as of the day of the taking, condemnation or sale.

C. Notwithstanding anything contained in Paragraphs 15.A. or 15.B. to the contrary, in the event of any taking, condemnation or sale in lieu of a taking of the Owner's Property, Lessee may terminate this Lease upon fifteen (15) days written notice to Owner if such condemnation may reasonably be expected to disrupt Lessee's operations at the Leased Property for more than forty-five (45) days.

D. Condemnation Award. Owner shall receive the entire condemnation award for the land and such other improvements as are owned by Owner, and Lessee hereby expressly assigns to Owner any and all right, title and interest of Lessee now or hereafter arising in and to any such award. Notwithstanding the foregoing, Lessee shall have the right to recover from such authority, but not from Owner, any compensation as may be awarded to Lessee on account of Lessee's leasehold interest, moving and relocation expenses, interruption of business and depreciation to and removal of the personal property and fixtures of Lessee.

D. Rebate of Rent. If this Lease is terminated pursuant to the provisions of Paragraphs 15.A., 15.B., or 15.C., Owner shall, within thirty (30) days after the termination date, reimburse to Lessee any prepaid rent that has not accrued as of the termination date, and all rights and obligations of Owner and Lessee arising after the date of termination shall terminate, except as specifically set forth in this Lease. The Owner's obligation under this subparagraph shall survive termination or expiration of this Lease.

16. **LIENS.**

A. Mechanics' Liens. Lessee shall keep the Leased Property free from any liens arising out of any work performed, materials furnished, or obligations incurred by or for Lessee, its sublessees or licensees. Lessee shall, within twenty (20) days of Lessee's receipt of written notice from Owner of the imposition of such lien, (i) cause the same to be released of record by payment or (ii) deliver to Owner a bond in the amount of one hundred ten percent (110%) of the amount of the lien. Upon delivery of the bond to Owner, Lessee may contest the validity of the lien. Once the lien is released of record, any bond provided by Lessee to Owner shall be released and returned to Lessee. No work which Owner permits

Lessee to perform on the Lease Property shall be deemed to be for the use of benefit of Owner so that no mechanics or other lien shall be allowed against the estate of Owner by reason of its consent to such work. Owner shall have the right to post notices that it is not responsible for payment for any such work.

17. **TAXES; MAINTENANCE.**

A. Taxes. Lessee shall be responsible for paying all personal property taxes assessed directly upon Lessee's communications facilities, and requiring that its sublessees and licensee's pay all personal property taxes assessed directly upon its sublessee's or licensee's communications facilities, located on the Leased Property. Lessee also shall be responsible for paying to Owner, as additional rent, all applicable real estate taxes assessed directly upon the Leased Property (including any portion of such taxes attributable to Lessee's communications facilities) within thirty (30) days of Lessee's receipt from Owner of a tax bill evidencing such taxes, and Owner shall pay such taxes to the appropriate governmental authorities upon receipt of such funds from Lessee. Lessee shall pay to Owner, all applicable sales taxes levied against the annual rent paid by Lessee to Owner, and Owner shall pay such sales taxes to, and file all required forms with, the appropriate governmental authorities upon receipt of such sales taxes levied against Owner's income derived from the Leased Property. Lessee shall have the right, at its sole option and at its sole cost and expense, to appeal, challenge or seek modification of any real estate tax assessment or billing for which Lessee is wholly or partly responsible for payment under this Lease. Owner shall reasonably cooperate with Lessee in filing, prosecuting and perfecting any appeal or challenge to real estate taxes as set forth in the preceding sentence, including but not limited to, executing any consent to appeal or other similar document.

B. Maintenance. Lessee, at Lessee's expense, shall be responsible for maintaining, repairing and replacing Lessee's communications facilities located on the Leased Property and shall cause its sublessees and/or licensees to maintain, repair and replace their respective communications facilities located on the Leased Property. All maintenance, repairs, and replacement required pursuant to this paragraph 17.B. shall be performed in good and workmanlike manner and shall be in compliance with all Governmental Laws, as defined in Paragraph 23.C. Owner will maintain the Owner's Property, excluding the Leased Property, in good condition, reasonable wear and tear excepted.

18. **QUIET ENJOYMENT AND NON-INTERFERENCE.**

A. Quiet Enjoyment. Owner represents, warrants and agrees that Lessee, upon paying the rent and performing the covenants and provisions in this Lease to be observed or performed by Lessee shall peaceably and quietly have and enjoy the Leased Property.

B. Interference. A material inducement to Owner's entering into this Lease is the right to place Owner's

emergency communications equipment (identified in Paragraph 4) on the Tower. Moreover, Lessee hereby acknowledges that Owner's emergency communications equipment on the Tower may be required during times of emergency. Accordingly, Lessee hereby agrees that it has not, nor shall it enter into any sublease or license to allow, or construct or permit the construction or placement of, any facility that would cause measurable interference to the operation of Owner's emergency communications equipment on the Tower. If any such interference occurs, Lessee agrees at its sole cost and expense, to eliminate or cause the elimination of such interference with the operation of Owner's emergency communications equipment on the Tower, including the signal strength of Owner's antennas on the Tower and Owner's use of any ground space within the Leased Property within ten (10) days after Lessee's receipt of Owner's written notice of such interference and, if necessary, to cause the interfering party to cease operating the equipment causing said interference; provided, however, such interfering party may thereafter intermittently operate the interfering equipment for purposes of determining if the interference has been cured. Lessee will examine the Property during the Feasibility Period to ensure that no existing use of the Property will interfere with Lessee's authorized use under this Lease. Owner shall not cause, permit or allow any other use of, or condition on, Owner's Property, not existing as of the Execution Date, which causes measurable interference with or impairs (i) the communications facilities of, including the signal strengths of antennas operated by Lessee or its sublessees and/or licensees from the Leased Property or (ii) the use of the Leased Property by Lessee and/or its sublessees and/or licensees. If any such interference occurs, Owner agrees to eliminate or cause the elimination of such interference with Lessee's or its sublessees' and/or licensees' operations of their respective communications facilities, including the signal strength of their antennas and/or use of the Leased Property within ten (10) days after Owner's receipt of Lessee's written notice of such interference and, if necessary, to cause the interfering party to cease operating the facilities causing the interference. Nothing herein shall be read to require Owner to have any duty with respect to Lessee, any sublessee or licensee for any interference caused thereto from any use of Owner's emergency communications equipment on the Tower, or any other use by Owner that predates the deployment of the specific equipment and/or frequencies that are causing or being caused measurable interference.

19. **RIGHTS TO EQUIPMENT; CONDITION ON SURRENDER.**

A. Personal Property. The communications facilities, equipment, improvements (including without limitation the Tower), fixtures and other property of Lessee and its sublessees and/or licensees on the Leased Property shall be and remain the personal property of Lessee and/or its sublessees and/or licensees, even though some of it may be permanently affixed to the land, and Lessee and its sublessees and/or licensees shall be entitled to take or remove all or any portion of their respective communications facilities, equipment, improvements, fixtures and

other property from the Leased Property without any hindrance by, through, or under Owner or the holder of any mortgage, deed of trust, ground lease or other encumbrance. Owner expressly waives all rights of levy, distraint or execution with respect to Lessee's and its sublessees' and/or licensees' property, including without limitation any statutory or common law security interest or landlord's lien for rent. Within ninety (90) days after the termination or expiration of this Lease, Lessee and its sublessees and/or licensees shall have the obligation to remove all or any part of their respective communications facilities, equipment, improvements, fixtures and other property from the Leased Property, except Lessee shall have no obligation to remove the Tower footings. Lessee or its sublessees and/or licensees shall repair or cause to be repaired any damage caused by such removal, and shall otherwise surrender the Leased Property in good condition, ordinary wear and tear, reimbursed damage by fire and other casualty excepted. Any of Lessee's or its sublessees' and/or licensees' communications facilities, equipment, improvements, fixtures and other property that has not been removed from the Property within said ninety (90) day period shall be deemed abandoned by Lessee or its sublessees and/or licensees. At such time, Owner may elect to either retain such property as its own (in which case Lessee shall execute all documentation reasonably requested by owner to formally transfer title of such property to Owner), or have such property removed and the Leased Property and easement areas restored to the condition required above at Lessee's sole expense. Notwithstanding any other provision of this Lease, Owner may require, upon written notice to Lessee, that the Tower and Owner's emergency broadcasting equipment remain on the Lease Property, and Lessee shall execute all documentation reasonably requested by owner to formally transfer title of such property to Owner. To the extent any such transfer of the Tower were to occur on or before Fifteen (15) years after the Commencement Date, Owner shall pay to Lessee the fair market value of any assets transferred to Owner.

20. **BROKERS.** Owner and Lessee each represent and warrant to the other that he, she or it has not negotiated with any broker or agent, real estate or otherwise, in connection with this Lease. Owner and Lessee each agrees that, if any claim is made against the other for a broker's or agent's commission, finder's fee or the like by reason of the acts of the first party, then the first party shall indemnify (with respect to Owner, to the extent permitted by law) and hold the other harmless from and against any and all liabilities, claims, demands, actions, losses, damages, orders, penalties, costs and/or expenses, including, without limitation, reasonable attorneys fees incurred in connection therewith and shall defend such action by legal counsel reasonably acceptable to the other.

21. **ESTOPPEL CERTIFICATES.**

A. Owner. Owner, at the request of Lessee, shall provide Lessee with a certificate stating: (i) whether Owner has any claim against Lessee and if so, stating the nature of such claim; (ii) that Owner recognizes Lessee's ownership of Lessee's communications facilities and other

property; (iii) that Lessee has the right to remove Lessee's communications facilities and other property from the Leased Property notwithstanding that such may be considered a fixture under local law except as otherwise provided in Paragraph 19.A.; (iv) whether an Event of Default by Lessee has occurred or would occur with the giving of notice and/or the passage of time; and (v) that Owner has no interest in and disclaims any interest to Lessee's communications facilities and other property, except such interest as may be granted pursuant to Paragraph 19.A, or to the extent of Owner's communication and associated equipment that may be placed on the Tower or on the Leased Property.

B. Lessee. Lessee, at the request of Owner, shall provide Owner with a certificate stating: (i) that this Lease is unmodified and in full force and effect (or, if there has been any modification, that the same is in full force and effect as modified and stating the modification); (ii) whether or not, to Lessee's knowledge, any set-offs, or defenses exist against the enforcement of any of the agreements, terms covenants or conditions hereof to be performed or complied with by Lessee (and if so specifying the same); and (iii) the date through which the rent has been paid.

22. **NOTICES.** Any notice, request or demand required or permitted to be given pursuant to this Lease shall be in writing and shall be deemed sufficiently given if (i) delivered by messenger at the address of the intended recipient, (ii) sent prepaid by next-work-day Federal Express (or a comparable guaranteed overnight delivery service), or (iii) deposited in the United States first class mail (registered or certified, postage prepaid, with return receipt requested). Any such notice, request, or demand so given shall be deemed given on the day it is delivered by messenger, on the next-work-day after the day of deposit with Federal Express (or a comparable overnight delivery service), or on the day that is two (2) business days after deposit in the United States Mail, as the case may be.

Lessee:

Verizon Wireless Personal Communications LP
dba Verizon Wireless
180 Washington Valley Road
Bedminster, NJ 07921
Attention: Network Real Estate

Owner:

City of Sanibel
c/o City Manager
800 Dunlop Road
Sanibel, Florida 33597
Telephone: (239) 472-3700

Copy to City Attorney:
Kenneth B. Cuyler, Esq.
800 Dunlop Road
Sanibel, Florida 33957
Telephone: (239) 472-4359

Any party may change his, her or its address for notice purposes by giving notice in accordance with this Paragraph 22.

23. **MISCELLANEOUS PROVISIONS.**

A. Title; Undisclosed Liens. Owner represents, warrants and agrees

that Owner is seized of good and sufficient title to and interest in the Owner's Property and has full authority to enter into and execute this Lease and no undisclosed liens, judgments or impediments of title exist on Owner's Property that would affect this Lease. Owner further represents, warrants and agrees that there are no covenants, easements, restrictions or agreements binding on Owner or the Owner's Property which prevent the use of the Leased Property by the Lessee and its sublessees and/or licensees, as set forth in this Lease.

B. Entire Lease; Amendments. This Lease, including the exhibits and attachments which are attached hereto and incorporated herein by this reference, incorporates all agreements and understandings between Owner and Lessee. No prior or other verbal agreements or understandings shall be binding upon Owner or Lessee, and any addition, amendment, variation or modification to this Lease shall be ineffective unless made in writing and signed by Owner and Lessee.

C. Compliance with Governmental Laws. Owner represents, warrants and agrees that throughout the term of this Lease, as may be extended, the Owner's Property including, without limitation, the Leased Property and all improvements thereon, other than improvements owned by Lessee or its sublessees and/or licensees, shall be in compliance with all laws, codes, and regulations of all federal, state and local governmental or quasi-governmental authorities (collectively, "Governmental Laws"). Lessee agrees that any improvements constructed on the Leased Property by Lessee and/or its sublessees and/or licensees and the operation of the communications facilities of Lessee and/or its sublessees and/or licensees on the Leased Property shall be in compliance with all Governmental Laws.

D. Governing Law. This Lease and the performance hereof shall be governed, interpreted, construed and regulated by the laws of the State of Florida.

E. Benefit. This Lease, and each and every covenant and condition herein, is intended to benefit the Leased Property and to run with the Owner's Property and shall extend to and bind the heirs, personal representatives, successors and assigns of the parties hereto.

F. Covenants and Conditions. The parties agree that all of the provisions hereof shall be construed as both covenants and conditions, the same as if the words importing such covenants and conditions has been used in each separate Paragraph.

G. Construction. The parties acknowledge that each has had an opportunity to review and negotiate this Lease and has executed this Lease only after such review and negotiation. The language of this Lease shall be construed simply and according to its fair meaning, and this Lease shall not be construed more strictly in favor or against either party.

H. Nondisturbance Agreement. At Owner's option, this Lease shall be subordinate to any mortgage or deed of trust which from

time to time may encumber all or any part of the Owner's Property, provided that every such mortgagee, beneficiary, trustee, or other holder having rights thereunder agrees to recognize (in writing and in a form reasonably acceptable to Lessee's counsel) the validity of this Lease and Lessee's rights under this Lease, including without limitation Lessee's right to remain in occupancy and have access to the Leased Property, as long as Lessee is not then in default of this Lease beyond any applicable notice and cure period, in the event of a foreclosure or the exercise of any other remedies under any such mortgage or deed of trust. Lessee shall execute whatever instruments may reasonably be required to evidence this subordination. If, as of the date of execution of this Lease, any mortgage, deed of trust, ground lease or other similar encumbrance affects Owner's Property, Owner agrees to obtain from the holder of such mortgage, deed of trust, ground lease, or other encumbrance a written agreement that Lessee shall not be disturbed in its possession, use and enjoyment of the Leased Property as long as an Event of Default by Lessee has not occurred hereunder.

I. Severability. If any portion of this Lease is declared by an arbitrator or arbitrators, or any court of competent jurisdiction, to be invalid or unenforceable, such portion shall be deemed modified to the extent necessary in such arbitrator's or arbitrators', or any court of competent jurisdiction's opinion to render such portion enforceable, and, as so modified, such portion and the balance of this Lease shall continue in full force and effect.

J. Enforcement. If either party institutes any action or proceeding in arbitration to enforce any provision hereof, or any action in any court of competent jurisdiction for damages for any alleged breach of any provisions hereof, the prevailing party in such action or proceeding, in addition to any other award given by the arbitrator(s), or court, shall be entitled to receive from the non-prevailing party such amount as the arbitrator(s), or court, may adjudge to be reasonable attorneys' fees for the services rendered to the prevailing party, together with its other reasonable litigation expenses.

K. Injunctive Relief. In addition to the other remedies provided for in this Lease, any party shall be entitled to immediate restraint by injunction of any violation of any of the covenants, conditions or provisions of this Lease.

L. Headings. The captions of the Paragraphs of this Lease are for convenience of reference only and shall not affect the interpretation of this lease.

M. Lighting of Communications Facilities. Lessee covenants that as of the Execution Date it has made a determination that no laws or regulations of the Federal Aviation Administration (FAA), Federal Communications Commission (FCC) or any other governmental agency or body require or recommend the lighting and/or marking of the Tower, and that no lighting will in fact be placed on the Tower, and that the absence of such lighting is a material condition of this Lease. Notwithstanding the foregoing, in the event there is a change in any

laws, rules or regulations promulgated by the FAA, FCC or any other governmental agency or body, such that lighting and/or marking of the Tower is required, then Lessee shall comply with such requirement, and compliance therewith shall not be deemed a breach of this Lease. Any lighting of ground facilities on the Leased Property shall be in accordance with Owner's ordinances, resolutions, rules and regulations and requisite building permits.

N. Memorandum of Lease. Concurrently with the execution of this Lease, Owner shall execute before a notary and deliver to Lessee for recording a "Memorandum of Lease Agreement", also referenced as "Short Form Lease", in the form of the attached Exhibit "C." Such Memorandum shall not disclose any financial terms, unless required to do so by the laws of the jurisdiction in which such Memorandum is recorded.

O. Arbitration. Any controversy or claim arising out of or relating to this Lease, or the breach of this Lease, may be settled by arbitration in accordance with the rules and regulations of the American Arbitration Association and in accordance with the Florida Arbitration Code, and judgment upon the award rendered by the arbitrator(s) may be entered in any court having jurisdiction thereof. The decision of the arbitrator(s) shall be final and non-appealable. The place of arbitration shall be Fort Myers, Florida. Arbitration shall be an option upon mutual agreement of the parties and shall not be construed as a requirement of this Lease.

P. Waiver. The failure of either party hereto to insist upon strict performance of any of the terms or conditions of this Lease or to exercise any of its rights under this Lease shall not waive such rights and such party shall have the right to enforce such rights at any time and take such action as may be lawful and authorized under this Lease, either in law or in equity.

Q. Casualty. In the event of damage by fire or other casualty to the Leased Property that cannot reasonably be expected to be repaired within forty-five (45) days following same or, if the Owner's Property is damaged by fire or other casualty so that such damage may reasonably be expected to disrupt Lessee's operations at the Leased Property for more than forty-five (45) days, then Lessee may at any time following such fire or other casualty, provided Owner has not completed the restoration required to permit Lessee to resume its operation at the Leased Property, terminate this Lease upon fifteen (15) days written notice to Owner. Any such notice of termination shall cause this Lease to expire with the same force and effect as though the date set forth in such notice were the date originally set as the expiration date of this Lease, and Owner shall, within thirty (30) days after the termination date, reimburse to Lessee any prepaid rent that has not accrued as of the termination date. The Owner's obligation under this subparagraph shall survive termination or expiration of this Lease. Notwithstanding the foregoing, all rental under this Lease shall abate during the period of such fire or other casualty.

R. Emergency removal of collapsed Tower or other facilities. In

the event of a natural disaster such as a hurricane, Owner shall make reasonable attempts to notify Lessee in the event that Lessee's Tower has been damaged or has collapsed. However, in the event that such emergency condition exists and Lessee's Tower or other facilities have collapsed onto Owner's sewer treatment facility, public right-of-way or other public facilities which require the immediate removal of such facilities, it is acknowledged by Lessee that Owner shall remove such Tower and facility in the event that Lessee is unable to do so within the emergency time-frame established by Owner. Under such circumstances, Owner shall have no liability for any additional damage or destruction to Lesee's Tower or other facilities.

S. Submission of Lease. The submission of this Lease for examination does not constitute an offer to lease the Leased Property and this Lease becomes effective only upon the full execution of this Lease by Owner and Lessees.

T. Authority to Execute. Each of the parties hereto warrants to the other that the person or persons executing this Lease on behalf of such party has the full right, power and authority to enter into and execute this Lease on such party's behalf and that no consent from any other person or entity is necessary as a condition precedent to the legal effect of this Lease.

IN WITNESS WHEREOF, the parties have executed this Lease.

OWNER: City of Sanibel

By: _____
~~Carla Brooks Johnston, Mayor~~
800 Dunlop Road
Sanibel, Florida 33957
Mick Denham, Vice Mayor

ATTEST: _____
Pamela Smith, City Clerk

APPROVED AS TO FORM:

_____
Kenneth B. Cuyler, City Attorney

Date: 3/21/06

FINANCIAL SUFFICIENCY APPROVED
_____ 3/18/06
Renee M. Lynch, FINANCE DIRECTOR

LESSEE:

Verizon Wireless Personal Communications LP
dba Verizon Wireless

By: _____
Name: Hans F. Leutenegger
Title: Area Vice President, Network, South Area
Address: 180 Washington Valley Road
Bedminster, NJ 07921
~~8921 Research Drive~~
~~Charlotte, NC 28262~~

Date: 5-8-2006

Witnesses:

By: _____

Name: Steven B. Cole

By: Courtney Phillips

Name: Courtney Phillips

CITY APPROVED 3/21/06

127782_v8

EXHIBIT "A"

DESCRIPTION OF OWNER'S PROPERTY

A PORTION OF GOVERNMENT LOT 7, SECTION 12, TOWNSHIP 46 SOUTH, RANGE 21 EAST, LEE COUNTY, FLORIDA, BEING MORE PARTICULARLY DESCRIBED AS FOLLOWS:

COMMENCE AT THE SOUTHWEST CORNER OF SAID GOVERNMENT LOT 7, THENCE S89°56'04"E ALONG THE SOUTHERLY BOUNDARY OF SAID GOVERNMENT LOT 7 A DISTANCE OF 697.27 FEET TO THE POINT OF BEGINNING, SAID POINT LYING ON THE ARC OF A NON-TANGENT CIRCULAR CURVE CONCAVE TO THE SOUTHWEST (A RADIAL LINE THROUGH SAID POINT BEARS S49°28'03"W); THENCE NORTHWESTERLY ALONG THE ARC OF SAID CURVE HAVING FOR ITS ELEMENTS A RADIUS OF 440.00 FEET, A CENTRAL ANGLE OF 04°18'19", A CHORD DISTANCE OF 33.05 FEET, A CHORD BEARING OF N42°49'05"W, AN ARC DISTANCE OF 33.06 FEET; THENCE N45°01'47"E A DISTANCE OF 36.42 FEET; THENCE N44°58'13"W A DISTANCE OF 110.00 FEET; THENCE S45°01'47"W A DISTANCE OF 50.38 FEET TO A POINT ON THE ARC OF A NON-TANGENT CIRCULAR CURVE CONCAVE TO THE SOUTHWEST (A RADIAL LINE THROUGH SAID POINT BEARS S31°14'38"W); THENCE NORTHWESTERLY ALONG THE ARC OF SAID CURVE HAVING FOR ITS ELEMENTS A RADIUS OF 440.00 FEET, A CENTRAL ANGLE OF 32°14'02", A CHORD DISTANCE OF 244.29 FEET, A CHORD BEARING OF N76°33'32"W, AN ARC DISTANCE OF 247.54 FEET; THENCE N05°18'27"W A DISTANCE OF 101.00 FEET; THENCE S84°41'33"W A DISTANCE OF 20.00 FEET; THENCE N05°18'27"W A DISTANCE OF 243.08 FEET; THENCE N57°23'58"E A DISTANCE OF 225.52 FEET; THENCE S41°45'25"E A DISTANCE OF 166.64 FEET; THENCE N75°25'57"E A DISTANCE OF 167.91 FEET; THENCE S69°09'39"E A DISTANCE OF 110.34 FEET; THENCE S31°55'32"W A DISTANCE OF 129.33 FEET; THENCE S55°00'26"E A DISTANCE OF 210.49 FEET; THENCE S68°56'18"E A DISTANCE OF 141.78 FEET; THENCE S49°19'26"E A DISTANCE OF 84.21 FEET; THENCE S50°14'38"W A DISTANCE OF 159.08 FEET TO A POINT ON THE SOUTHERLY BOUNDARY OF SAID GOVERNMENT LOT 7; THENCE WESTERLY ALONG THE SOUTHERLY BOUNDARY OF SAID GOVERNMENT LOT 7 A DISTANCE OF 388.04 FEET TO THE POINT OF BEGINNING.

SAID PARCEL CONTAINS 6.770 ACRES MORE OR LESS.

DESCRIPTION OF PROPOSED
LESSEE'S LEASED PROPERTY

A PORTION OF TRACT "A" OF THE SANCTUARY AT WALKER POINT PHASE 1, AS SHOWN IN PLAT BOOK 50, PAGE 52 IN THE PUBLIC RECORDS OF LEE COUNTY, FLORIDA, (ALSO SHOWN A PORTION OF LANDS DESCRIBED IN OFFICIAL RECORDS BOOK 2405, PAGE 3506), MORE PARTICULARLY DESCRIBED AS FOLLOWS:

COMMENCE AT THE POINT OF BEGINNING OF THOSE LANDS DESCRIBED IN OFFICIAL RECORDS BOOK 2405, PAGE [illegible] OF THE OFFICIAL PUBLIC RECORDS OF LEE COUNTY, FLORIDA; PROCEED SOUTH [illegible] ALONG THE SOUTHERLY LINE OF SAID LANDS, A DISTANCE OF 157.52 FEET; THENCE NORTH [illegible] EAST, A DISTANCE OF [illegible] FEET TO THE POINT OF BEGINNING OF THE FOLLOWING DESCRIBED PARCEL; THENCE NORTH 01°17'53" EAST, A DISTANCE OF [illegible] FEET; THENCE SOUTH [illegible] EAST, A DISTANCE OF 50.00 FEET; THENCE SOUTH [illegible] WEST, A DISTANCE OF [illegible] FEET; THENCE NORTH 85°49'07" WEST, A DISTANCE OF 50.00 FEET TO THE POINT OF BEGINNING.

CONTAINING 2,500.0 SQUARE FEET, MORE OR LESS.

DESCRIPTION OF PROPOSED
ACCESS EASEMENT

A PORTION OF TRACT "A" OF THE SANCTUARY AT WALKER POINT PHASE 1, AS SHOWN IN PLAT BOOK 50, PAGE 52 IN THE PUBLIC RECORDS OF LEE COUNTY, FLORIDA, (ALSO SHOWN A PORTION OF LANDS DESCRIBED IN OFFICIAL RECORDS BOOK 2405, PAGE 3506), MORE PARTICULARLY DESCRIBED AS FOLLOWS:

COMMENCE AT THE POINT OF BEGINNING OF THOSE LANDS DESCRIBED IN OFFICIAL RECORDS BOOK 2405, PAGE 3506 OF THE OFFICIAL PUBLIC RECORDS OF LEE COUNTY, FLORIDA; PROCEED SOUTH [illegible] EAST ALONG THE SOUTHERLY LINE OF SAID LANDS, A DISTANCE OF 157.52 FEET; THENCE NORTH [illegible] EAST, A DISTANCE OF [illegible] FEET TO THE POINT OF BEGINNING OF THE FOLLOWING DESCRIBED PARCEL; THENCE NORTH [illegible] WEST, A DISTANCE OF [illegible] FEET; THENCE NORTH 49°37'07" WEST, A DISTANCE OF 247.20 FEET; THENCE NORTH [illegible] WEST, A DISTANCE OF [illegible] FEET; THENCE SOUTH 78°40'57" WEST, A DISTANCE OF [illegible] FEET TO A POINT ON THE WESTERLY LINE OF LANDS DESCRIBED IN OFFICIAL RECORDS BOOK 2405, PAGE 3506, (ALSO BEING THE WESTERLY LINE OF TRACT "A", AS SHOWN IN PLAT BOOK 50, PAGE 52); THENCE NORTH 05°18'27" WEST ALONG SAID WESTERLY LINE, A DISTANCE OF 20.11 FEET; THENCE NORTH 78°40'57" EAST, A DISTANCE OF 171.28 FEET; THENCE SOUTH [illegible] EAST, A DISTANCE OF 45.52 FEET; THENCE SOUTH 49°37'07" EAST, A DISTANCE OF 246.83 FEET; THENCE SOUTH 81°57'52" EAST, A DISTANCE OF 123.47 FEET; THENCE SOUTH 04°10'53" WEST, A DISTANCE OF 20.05 FEET TO THE POINT OF BEGINNING.

CONTAINING 11,712.9 SQUARE FEET, MORE OR LESS.

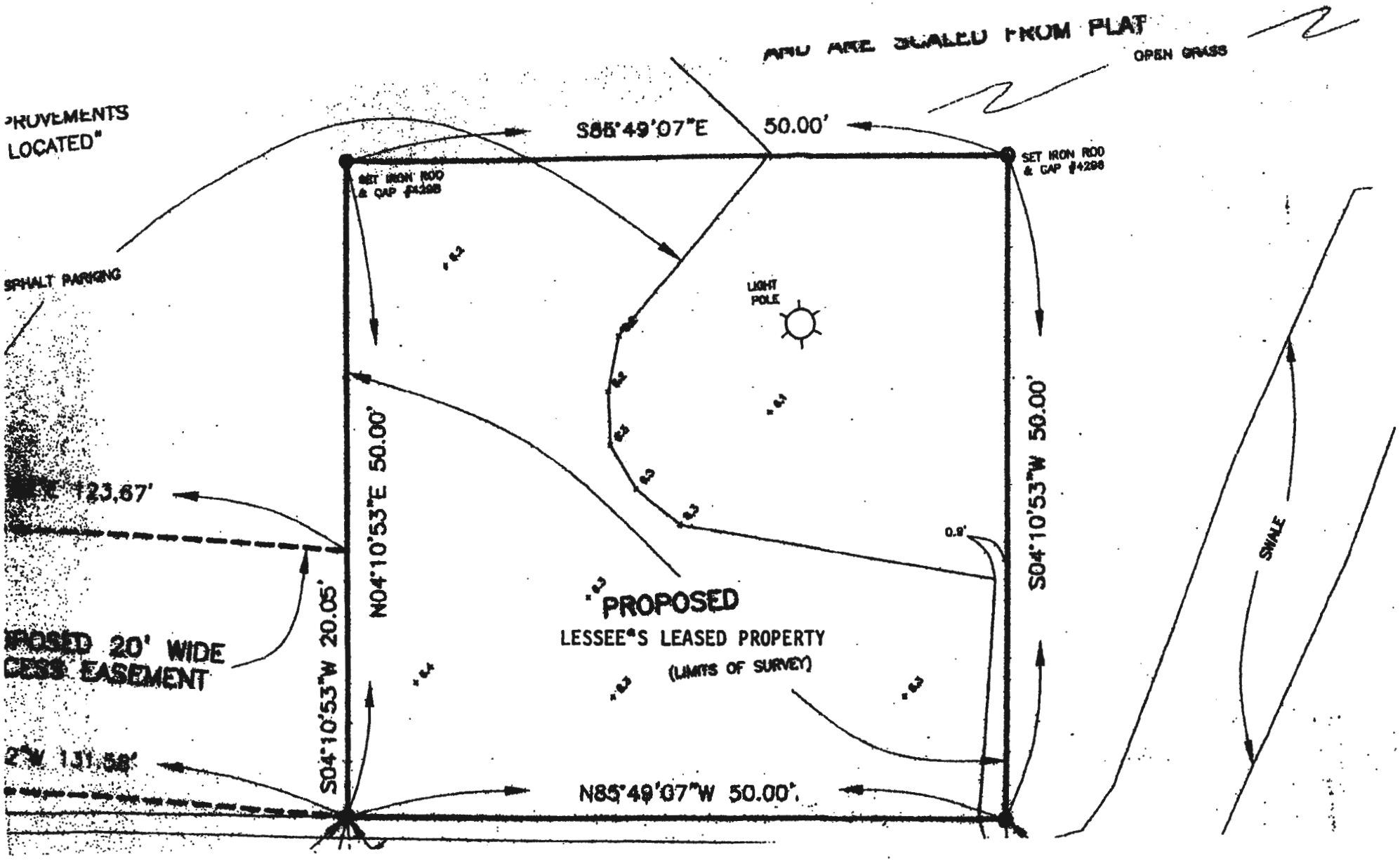

EXHIBIT "B"
Page 2 of 4

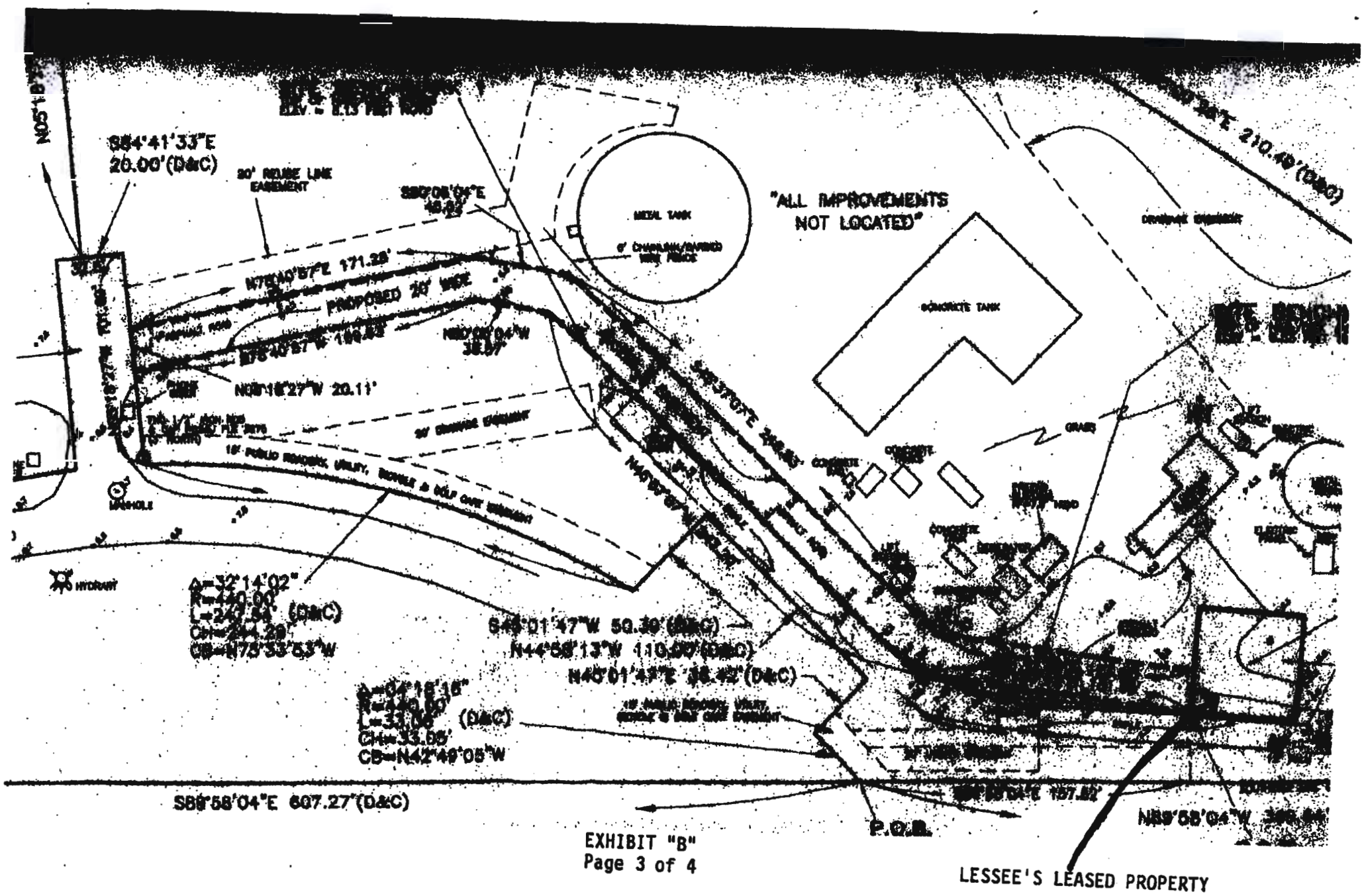

EXHIBIT "B"
Page 3 of 4

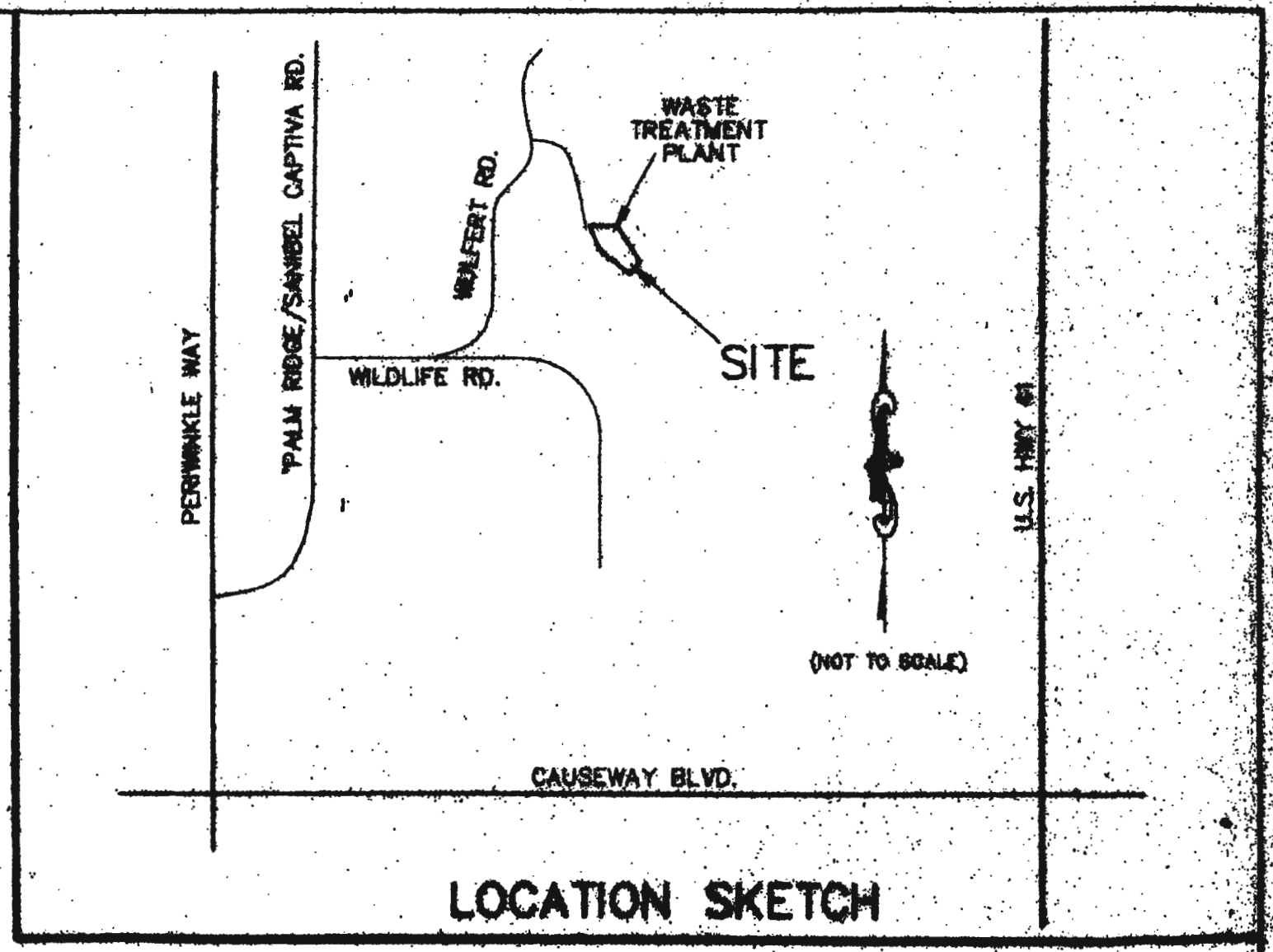

LOCATION SKETCH

Upon Recording, Return to:

Robert M. Motes, Esq.
Holland & Knight LLP
One East Broward Boulevard
Suite 1300
Fort Lauderdale, Florida 33301

STATE OF FLORIDA)
)
COUNTY OF LEE)

MEMORANDUM OF LEASE AGREEMENT

This Memorandum of Lease Agreement is made this _____ day of _____, 2006, between **CITY OF SANIBEL**, with a mailing address of 800 Dunlop Road, Sanibel, Florida 33597, hereinafter collectively referred to as "LESSOR", and **VERIZON WIRELESS PERSONAL COMMUNICATIONS LP** d/b/a Verizon Wireless, with its principal office located at 180 Washington Valley Road, Bedminster, New Jersey 07921, hereinafter referred to as "LESSEE". LESSOR and LESSEE are at times collectively referred to hereinafter as the "Parties" or individually as the "Party".

1. LESSOR and LESSEE entered into a Lease Agreement (the "Agreement") on _____, 2006 for an initial term of five (5) years, commencing on the Commencement Date (defined in the Agreement to be the first day of the month after the date LESSEE begins construction of its communications tower on the Premises). The Agreement shall automatically be extended for three (3) additional five (5) year terms unless the LESSEE terminates it at the end of the then current five (5) year term by giving the LESSOR written notice of the intent to terminate at least one hundred eighty (180) days prior to the end of the then current five (5) year term.

2. LESSOR owns certain real property and the improvements thereon commonly known as 2222 Wulfert Road, City of Sanibel, County of Lee, State of Florida (the "Property") as described on the attached Exhibit "A". LESSOR hereby leases and demises to LESSEE a portion of the Property comprised of approximately 2,500 (50 x 50) square feet of land in the location shown and described on Exhibit "B" (the "Premises"). LESSOR also grants and conveys to LESSEE nonexclusive

easements across the Property connecting the Premises with the nearest public right-of-way and public utility easement (as applicable), for (i) unrestricted vehicular and pedestrian access to the Premises and parking on the Property, as needed to install, operate and maintain LESSEE's communications facilities, seven (7) days a week, twenty-four (24) hours a day and (ii) installation, location, operation and maintenance of cable runs and utilities including, without limitation, telephone and electric utilities, all as shown and described on Exhibit "B". In the event any public utility is unable to use the aforementioned easement, LESSOR has agreed to grant an additional easement either to LESSEE or to the public utility at no cost to LESSEE.

3. The terms, covenants and provisions of the Agreement are hereby incorporated by reference into this Memorandum and shall extend to and be binding upon the respective executors, administrators, heirs, successors and assigns of LESSOR and LESSEE.

[Remainder of Page Left Blank, Signature Page to Follow]

IN WITNESS WHEREOF, LESSOR and LESSEE have caused this Memorandum to be duly executed on the date first written hereinabove.

LESSOR:

City of Sanibel

By: _____
Carla Brooks Johnston, Mayor
800 Dunlop Road
Sanibel, Florida 33957

ATTEST: _____
Pamela Smith, City Clerk

APPROVED AS TO FORM:

_____
Kenneth B. Cuyler, City Attorney

Date: _____

LESSEE:

VERIZON WIRELESS PERSONAL COMMUNICATIONS LP
d/b/a VERIZON WIRELESS

BY:_____
Hans F. Leutenegger
Area Vice President – Network,
South Area

STATE OF _____)
) **ACKNOWLEDGMENT**
COUNTY OF _____)

I, _____, a Notary Public for said County and State, do hereby certify that Carla Brooks Johnston personally came before me this day and acknowledged that she is the Mayor of the City of Sanibel, and that she, as Mayor, being authorized to do so, executed the foregoing **MEMORANDUM OF LEASE AGREEMENT** on behalf of the City of Sanibel.

WITNESS my hand and official Notarial Seal, this ___ day of _____, 2006.

_____
Notary Public

My Commission Expires:
_____

(Notary Seal)

STATE OF _____)
) **ACKNOWLEDGMENT**
COUNTY OF _____)

I, _____, a Notary Public for said County and State, do hereby certify that **Hans F. Leutenegger** personally came before me this day and acknowledged that he is the Area Vice President - Network, South Area of **VERIZON WIRELESS PERSONAL COMMUNICATIONS LP** d/b/a Verizon Wireless, and that he, as Area Vice President - Network, South Area, being authorized to do so, executed the foregoing **MEMORANDUM OF LEASE AGREEMENT** on behalf of **VERIZON WIRELESS PERSONAL COMMUNICATIONS LP** d/b/a Verizon Wireless.

WITNESS my hand and official Notarial Seal, this ___ day of _____, 2006.

_____
Notary Public

My Commission Expires:
_____

(Notary Seal)

EXHIBIT A

TO MEMORANDUM OF LEASE

EXHIBIT B

TO MEMORANDUM OF LEASE

109813_v5

EXHIBIT "D"

(OWNERS APPROVED EQUIPMENT SHALL BE SET FORTH ON THIS EXHIBIT WHEN APPROVED PURSUANT TO SECTION 4(C) OF THIS LEASE)

FLORIDA SALES TAX EXEMPTION CERTIFICATE

VERIZON WIRELESS PERSONAL COMMUNICATIONS LP d/b/a VERIZON WIRELESS, a Delaware limited partnership, hereby certifies to CITY OF SANIBEL, a municipal corporation of the State of Florida ("Landlord") that the premises subject to that certain Lease Agreement, dated _____, 2006, between Landlord and Verizon Wireless, is to be used for the placement of towers, antennas, cables, accessory structures, or equipment used in providing cellular communications services, personal communications services, paging services, specialized mobile radio services, or some other form of mobile one-way or two-way communications services. The undersigned understands that when any person fraudulently, for the purpose of evading tax, issues to a vendor, or to any agent of the state, a certificate or statement in writing in which he or she claims exemption from the sales tax, such person, in addition to being liable for payments of the tax plus a mandatory penalty of 200% of the tax, shall be liable for fine and punishment provided by law for conviction of a felony of the third degree, as provided in s. 775.082, s. 775.083, or s. 775.084, Florida Statutes.

Verizon Wireless Personal Communications LP
d/b/a Verizon Wireless
Lessee/Licensee's Name (Print)

80-00-007049-66-0
Florida Sales Tax Certificate #

0000403046
Florida Communications Tax #

KNLF230 – Miami-Fort Lauderdale
FCC License Number

Antennas/Equipment used to provide (check one):
____ Cellular ____ ESMR ___X___ PCS ____ Paging

Signature of authorized representative

5/8/2006
Date

Hans F. Leutenegger
Print name of authorized representative

75-2681333
Federal Tax I.D. Number

Area Vice President – Network South Area
Title of authorized representative

908-306-7000
Telephone Number

3703722_v1

Holland+Knight

Tel 954 525 1000
Fax 954 463 2030

Holland & Knight LLP
One East Broward Boulevard, Suite 1300
Fort Lauderdale, FL 33301-1865
www.hklaw.com

ROBERT M. MOTES
954 468 7886
robert.motes@hklaw.com

RECEIVED
MAY 16 2006
CITY OF SANIBEL
LEGAL DEPARTMENT

May 15, 2006

VIA FEDEX

Kenneth B. Cuyler, Esq.
City Attorney
City of Sanibel
800 Dunlop Road
Sanibel, FL 33957

Re: Verizon / Tower / Sanibel (Wufert Road)

Dear Ken:

Enclosed are two originals of the Lease Agreement, two originals of the Memorandum of Lease Agreement and an original Florida Sales Tax Exemption Certificate. Kindly send me one copy of the fully executed Lease Agreement and Memorandum of Lease after they have been signed by the City of Sanibel.

Please do not hesitate to contact me should you have any questions.

Sincerely yours,

HOLLAND & KNIGHT LLP

By: _____
ROBERT M. MOTES

Enclosures

12. CITY MANAGER'S REPORT

a. Informational items:

1. Final disposition on design on telecommunication tower at 2222 Wulfert Road

5-16-2006

City of Sanibel

Planning Department

MEMORANDUM

DATE: May 3, 2006

TO: Judy Zimomra, City Manger

FROM: Robert J. Duffy, AICP, Director of Planning

SUBJECT: Feasibility Study of An Alternative Telecommunication Tower At 2222 Wulfert Road

---

On August 20, 2002, City Council adopted Resolution No. 02-83, which approved the permit application submitted by Verizon Wireless to construct a 149 feet AGL (above ground level) monopole telecommunication tower at the City's Wulfert Road/ Wastewater Treatment Facility.

On Tuesday March 21, 2006, City Council accepted the lease agreement associated with the placement of the monopole on City-owned land by Verizon Wireless. However, as a part of their action, the City Council requested that the feasibility of a stealth flagpole design also be reviewed as an alternative design to the approved monopole.

After consideration of these two (2) options by the City's MIS and Police Department. The monopole design was selected for the following reasons:

1. The Police Department made an inquiry to Lee County Public Safety Communication Director Michael Bridges regarding which tower would work best for an 800MGz repeater. The County recommended the monopole because engineering the signal propagation would encompass more area and the costs would be significantly less.

2. The flagpole design may consist of a series of no more than four (4) enclosed canisters with each situated at 10 feet intervals and as such is limited to no more than four users. Should there be a future need to have the Verizon's tower serve more than four users, the flagpole design would not be able to accommodate any additional carrier.

3. The monopole design has greater flexibility for the installation of any other potential nonwireless communication devices, in addition to the 800MGz antenna.

The Planning Department will issue the development permit to Verizon, upon receipt and approval of the proposed construction plan and permit conditions to be circulated next week to each of the appropriate departments for their final comments and review.

Cc: Ken Cuyler, City Attorney, Gates Castle, Public Works Director, William Tomlinson ,Police Chief, Bert Smith, MIS Director, Rob Loflin, Natural Resources Director and Harold Law, Building Official

CITY MANAGER'S REPORT

Informational items:

Final disposition on design on telecommunication tower at 2222 Wulfert Road

Ms. Zimomra called Council's attention to the agenda packet information.

Annual Deposit and Investment Report September 2005

Ms. Zimomra noted that the information was in the agenda packet.

City Work Force Challenges

Ms. Zimomra noted that more incentives were being offered as signing bonuses.
Discussion ensued regarding the City paying for equipment.

Community Housing and Resources Quarterly Financial Statement

Ms. Zimomra stated the report was in the agenda packet.

CITY ATTORNEY'S REPORT

None.

PUBLIC COMMENT

None.

COUNCILMEMBERS' REPORT

Councilman Rothman asked for permission to participate by phone.

Discussion ensued regarding Councilmembers participating by phone, and reschedule the June 06 meeting.

There being no further business the meeting was adjourned at 7:35 p. m.

Respectfully submitted by,

Pamela Smith, CMC
City Clerk

06\07-102

Lessee's Site ID: Sanibel Island Wulfert Road / 68907

TRI-PARTY SUBLEASE AGREEMENT

This Tri-Party Sublease Agreement ("Agreement") is made and entered into this 21st day of August, 2007 by and among CITY OF SANIBEL, with a mailing address located at 800 Dunlop Road, Sanibel, Florida 33957, hereinafter designated "Owner", and VERIZON WIRELESS PERSONAL COMMUNICATIONS LP d/b/a Verizon Wireless, with its principal office located at One Verizon Way, Mail Stop 4AW100, Basking Ridge, New Jersey 07920, hereinafter designated "Lessee", and NEW CINGULAR WIRELESS PCS, LLC, a Delaware limited liability company, with its mailing address located at 6100 Atlantic Boulevard, Norcross, Georgia 30071, hereinafter referred to as "Sublessee".

RECITALS

WHEREAS, Owner is the owner of certain real property situated at 2222 Wulfert Road, City of Sanibel, Lee County, Florida (hereinafter the "Property").

WHEREAS, Owner and Lessee entered into that certain Lease Agreement dated May 18, 2006 (hereinafter referred to as the "Prime Lease"), whereby Lessee leased a portion of the Property legally described in Exhibit 1 attached hereto (the "Leased Property") for the purpose of constructing and operating a communications tower and facilities.

WHEREAS, Sublessee desires to sublease from Lessee both ground space and tower space to install, maintain and operate a communications facility.

WHEREAS, Section 7(C) of the Prime Lease requires any sublessee co-locating within the Leased Property to execute this Agreement.

WHEREAS, this Agreement shall constitute Lessee's written notice to Owner of a sublease of the Leased Property as required by Section 10(B) of the Prime Lease.

NOW, THEREFORE, for and in consideration of the covenants and conditions set forth herein, and other good and valuable consideration, the receipt and sufficiency of which are hereby acknowledged, the parties hereto hereby agree as follows:

1. The foregoing Recitals are true and correct and are incorporated herein by reference.

2. Pursuant to Section 7(C) of the Prime Lease, Sublessee acknowledges and agrees that any sublease rent due under that certain Supplement dated July 13, 2007, by and between Lessee and Sublessee, hereinafter referred to as the "Sublease", is to be split equally between Owner and Lessee and that Sublessee is obligated on the first (1st) day of each month during the term of the Sublease to pay Owner for its fifty percent (50%) share of said rent. Said sublease rent due to the Owner by Sublessee will terminate upon the earlier termination or expiration of the Sublease with Lessee. In the event Sublessee fails to timely make any payment to Owner due under this Agreement, and such failure continues for more than fifteen (15) days after receipt of written notice from Owner to Sublessee, then Sublessee agrees that Owner shall be entitled to

exercise against Sublessee all remedies available to a landlord under a lease in the State of Florida,. The foregoing shall not in any way limit Lessee's rights and remedies against Sublessee for Sublessee's failure to perform under the Sublease.

3. Sublessee's rights under the Sublease and its use of the Leased Property are subject in all respects to the terms and conditions of the Prime Lease. Sublessee shall not be obligated for the payments of any rent or other monies due under the Prime Lease except as contemplated in the Sublease.

4. All notices hereunder must be in writing and shall be deemed validly given if sent by certified mail, return receipt requested or by commercial courier, provided the courier's regular business is delivery service and provided further that it guarantees delivery to the addressee by the end of the next business day following the courier's receipt from the sender, addressed as follows (or any other address that the party to be notified may have designated to the other by notice delivered in accordance with this paragraph):

Owner: City of Sanibel
c/o City Manager
800 Dunlop Road
Sanibel, Florida 33957

Copy to Kenneth B. Cuyler, Esq., City Attorney
800 Dunlop Road
Sanibel, Florida 33957

Lessee: Verizon Wireless Personal Communications LP
d/b/a Verizon Wireless
180 Washington Valley Road
Bedminster, New Jersey 07921
Attention: Network Real Estate

Sublessee: New Cingular Wireless PCS, LLC
Re: Cell Site Name: Wulfert Road
6100 Atlantic Boulevard
Norcross, Georgia 30071
Attention: Real Estate Network Administrator

With a copy to: New Cingular Wireless PCS, LLC
Attn: Legal Department
Re: Cell Site Name: Wulfert Road
5565 Glenridge Connector
Atlanta, GA 30342

Notice shall be effective upon mailing or delivering the same to a commercial courier, as permitted above.

IN WITNESS HEREOF, the parties hereto have executed this Agreement as of the date first written above.

WITNESSES:

By: _____
Name: Jean M. Musa

By: _____
Name: Steven B. Cole

LESSEE:
VERIZON WIRELESS PERSONAL COMMUNICATIONS LP
d/b/a Verizon Wireless

By: _____
Name: Hans F. Leutenegger
Title: Area Vice President, Network, South Area
Date: July 19, 2007

OWNER:
CITY OF SANIBEL

By: _____
Name: Mick Denham
Title: Mayor

Attest: _____
By: Pamela Smith
Title: City Clerk

Financial sufficiency approved:
_____
Name: Renee M. Lynch
Title: Finance Director

Approved as to form:
_____
Name: Kenneth B. Cuyler
Title: City Attorney

WITNESSES:

By: _____
Name: Scott Schulz

By: _____
Name: Brandon Barr

SUBLESSEE:
NEW CINGULAR WIRELESS PCS, LLC a Delaware limited liability company

By: _____
Name: Doug O'Neil
Title: Executive Director NFL
Date: July 13, 2007

4640687_v5

EXHIBIT 1

Legal Description of Leased Property

DESCRIPTION OF OWNER'S PROPERTY

A PORTION OF GOVERNMENT LOT 7, SECTION 12, TOWNSHIP 46 SOUTH, RANGE 25 EAST, LEE COUNTY, FLORIDA, BEING MORE PARTICULARLY DESCRIBED AS FOLLOWS:

COMMENCE AT THE SOUTHWEST CORNER OF SAID GOVERNMENT LOT 7, THENCE [illegible] ALONG THE SOUTHERLY BOUNDARY OF SAID GOVERNMENT LOT 7 A DISTANCE OF [illegible] FEET TO THE POINT OF BEGINNING, SAID POINT LYING ON THE ARC OF A NON-TANGENT CIRCULAR CURVE, CONCAVE TO THE SOUTHWEST (A RADIAL LINE THROUGH SAID POINT BEARS S[illegible]); THENCE NORTHWESTERLY ALONG THE ARC OF SAID CURVE HAVING FOR ITS ELEMENTS A RADIUS OF [illegible] FEET, A CENTRAL ANGLE OF [illegible], A CHORD DISTANCE OF 33.05 FEET, A CHORD BEARING OF [illegible], AN ARC DISTANCE OF [illegible] FEET; THENCE N[illegible] A DISTANCE OF [illegible] FEET; THENCE N[illegible] A DISTANCE OF 110.00 FEET; THENCE S[illegible] A DISTANCE OF [illegible] FEET TO A POINT ON THE ARC OF A NON-TANGENT CIRCULAR CURVE CONCAVE TO THE SOUTHWEST (A RADIAL LINE THROUGH SAID POINT BEARS [illegible]); THENCE NORTHWESTERLY ALONG THE ARC OF SAID CURVE HAVING FOR ITS ELEMENTS A RADIUS OF [illegible] FEET, A CENTRAL ANGLE OF [illegible], A CHORD DISTANCE OF [illegible] FEET, A CHORD BEARING OF [illegible], AN ARC DISTANCE OF 247.54 FEET; THENCE N[illegible] A DISTANCE OF [illegible] FEET; THENCE S[illegible] A DISTANCE OF 20.00 FEET; THENCE N[illegible] A DISTANCE OF [illegible] FEET; THENCE N57°23'55"E A DISTANCE OF [illegible] FEET; THENCE S[illegible] A DISTANCE OF [illegible] FEET; THENCE N[illegible] A DISTANCE OF 147.93 FEET; THENCE [illegible] A DISTANCE OF 110.34 FEET; THENCE [illegible] A DISTANCE OF [illegible] FEET; THENCE S50°09'26"E A DISTANCE OF [illegible] FEET; THENCE S[illegible] A DISTANCE OF [illegible] FEET; THENCE S[illegible] A DISTANCE OF [illegible] FEET TO A POINT ON THE SOUTHERLY BOUNDARY OF SAID GOVERNMENT LOT 7; THENCE [illegible] ALONG THE SOUTHERLY BOUNDARY OF SAID GOVERNMENT LOT 7 A DISTANCE OF [illegible] FEET TO THE POINT OF BEGINNING.

SAID PARCEL CONTAINS [illegible] ACRES MORE OR LESS.

EXHIBIT 1

Legal Description of Leased Property
Page 2 of 2

[redacted]

LESSEE'S LEASED PROPERTY

A PORTION OF [redacted]

COMMENCE AT [redacted]

CONTAINING [redacted]

[redacted]

A PORTION OF [redacted]

COMMENCE AT [redacted]

CONTAINING 11,712.8 SQUARE FEET, MORE OR LESS.

ATTACHED FOR REFERENCE ONLY: SUBLEASE BETWEEN VERIZON AND CINGULAR

LESSEE Site ID: Wulfert Road
LESSOR Site ID: 68907 Sanibel Island (Wulfert Road)

SUPPLEMENT

This Supplement Agreement ("Supplement"), made this 13th day of JULY, 2007 between Verizon Wireless Personal Communications LP d/b/a Verizon Wireless, a Delaware limited partnership, with an office located at One Verizon Way, Mail Stop 4AW100, Basking Ridge, NJ 07920, with a federal identification number of 75-2681333, hereinafter designated LESSOR, and New Cingular Wireless PCS LLC, a Delaware limited liability company, with an office at 6100 Atlantic Boulevard, Norcross, GA 30071, hereinafter designated LESSEE.

1. This Supplement is a Supplement as referenced in that certain Master Lease Agreement ("Agreement") between New Cingular Wireless PCS, LLC as successor to BellSouth Mobility LLC and SBC Wireless, LLC, hereinafter referred to as "CINGULAR", with its principal mailing address c/o New Cingular Wireless PCS, LLC, 6100 Atlantic Boulevard, Norcross, GA 30071 and Cellco Partnership, a Delaware general partnership, d/b/a Verizon Wireless dated September 5, 2002 ("Agreement"). All of the terms and conditions of the Agreement are incorporated hereby by reference and made a part hereof without the necessity of repeating or attaching the Agreement. In the event of a contradiction, modification or inconsistency between the terms of the Agreement and this Supplement, the terms of this Supplement shall govern. Capitalized terms used in this Supplement shall have the same meaning described for them in the Agreement unless otherwise indicated herein.

2. The Property leased by the LESSOR is described as follows:

A 50' x 50' portion of that certain real property commonly known as 2222 Wulfert Road City of Sanibel, County of Lee, State of Florida, as further described in the Prime Lease attached hereto as Exhibit 3.

3. The Premises leased by the LESSOR to the LESSEE hereunder is described as follows:

A 14' x 16' Lease Area within LESSOR's existing compound property as depicted on Exhibit 1 attached hereto, and space on LESSOR's tower at a RAD center of 120'.

4. In the event an Exhibit 1 is attached hereto describing the Premises, the LESSEE shall have the right to survey the Property and/or Premises and said survey shall then become Exhibit 2 which shall be attached hereto and made a part hereof and shall control in the event of any discrepancies between it and Exhibit 1. The cost for such work shall be borne by the LESSEE.

5. The term and Commencement Date of this Supplement shall be as set forth in Paragraphs 5 and 6 of the Agreement and the date certain envisioned in Paragraph 5 of the Agreement is September 1, 2007, except: N/A.

6. The rental for the initial term pursuant to this Supplement shall be due at an annual rental of Eighteen Thousand Dollars ($18,000.00) to be paid in equal monthly installments on the first day of the month, in advance, to LESSOR at P.O. Box 64498 Baltimore, MD 21264, or to such other person, firm or place as the LESSOR may, from time to time, designate in writing at least thirty (30) days in advance of any rental payment date.

7. If the Property is subject to a Prime Lease affecting LESSOR's interest at the Property, a copy of such agreement is attached hereto as Exhibit 3.

8. Notwithstanding anything herein to the contrary, pursuant to Section 7(c) of the Prime Lease, in the event LESSOR subleases any portion of the Property, any rental paid by any sublessee(s) shall be divided between LESSOR and the City of Sanibel (the "City") in the following manner: 50% to LESSOR and 50% to the City. In accordance with Section 7(c) of the Prime Lease, LESSEE shall remit the above-mentioned percentages of each monthly rent installment due under this Supplement directly to LESSOR and the City. The fifty percent (50%) of each monthly installment which shall be paid to the City shall be paid to: City of Sanibel, c/o City Manager, 800 Dunlop Road, Sanibel, Florida 33957 or to such other person, firm or place as the City may, from time to time, designate in writing. In accordance with Section 7(c) of the Prime Lease, LESSOR and LESSEE shall enter into a separate Tri-Party Sublease Agreement with the City to confirm LESSEE's obligation to remit the above-mentioned percentages of each monthly rental payment directly to LESSOR and to the City.

IN WITNESS WHEREOF, the parties hereto have set their hands and affixed their respective seals the day and year first above written.

LESSOR:

Verizon Wireless Personal Communications LP
d/b/a Verizon Wireless

By: _____

Print Name: Hans F. Leutenegger
Title: Area Vice President, Network, South Area

WITNESSES:

By: _____

Print Name: Jean M. Musa

By: _____

Print Name: Steven B. Cole

LESSEE:

New Cingular Wireless PCS, LLC

By: _____

Print Name: Doug O'Neil
Title: Executive Director NFL

WITNESSES:

By: _____

Print Name: CHERYL MARLIN

By: _____

Print Name: Amy Wilson

4596562_v5

Prepared by:
James M. Ajaab
Goodman Networks
1101 Greenwood Blvd
Lake Mary, FL 32746

Return to:
New Cingular Wireless PCS, LLC
6100 Atlantic Boulevard
Norcross, GA 30071
Attn: Network Real Estate Administration

Re: LESSEE Cell Site #: 151G0152 Cell Site Name: Wulfert Road
Fixed Asset Number #: 10117832
LESSOR Site ID: Sanibel Island (Wulfert Road), No. 68907

State: Florida
County: Lee

MEMORANDUM
OF
SUPPLEMENT

This Memorandum of Supplement is entered into on this 13 day of JULY, 2007, by and between Verizon Wireless Personal Communications LP d/b/a Verizon Wireless, a Delaware limited partnership, having an address of One Verizon Way, Mail Stop 4AW100, Basking Ridge, New Jersey 07920 (hereinafter referred to as "**Lessor**") and New Cingular Wireless PCS, LLC, a Delaware limited liability company, having a mailing address of 6100 Atlantic Boulevard, Norcross, GA 30071 (hereinafter referred to as "**Lessee**").

1. Lessor and Lessee entered into a certain Supplement Agreement ("Supplement") on the 13 day of JULY, 2007, for the purpose of installing, operating and maintaining a communications facility and other improvements. All of the foregoing is set forth in the Supplement.

2. The initial lease term will be five (5) years ("**Initial Term**") commencing on the first (1st) day of the month after the Lessor, upon request from the Lessee, gives its prior written approval to proceed with construction, or (b) September 1, 2007, whichever occurs first, with four (4) successive five (5) year options to renew.

3. The portion of the land being leased to Lessee (the "Premises") is described in **Exhibit 1** annexed hereto.

4. Notwithstanding anything herein, the Supplement is subject and subordinate to that certain underlying Lease Agreement dated May 18, 2006 by and between Lessor, as lessee thereunder, and City of Sanibel, as Owner. A short form of lease evidencing said underlying Lease Agreement was recorded in the Public Records of Lee County, Florida on June 5, 2006 as Instrument # 2006000224862.

5. This Memorandum of Supplement is not intended to amend or modify, and shall not be deemed or construed as amending or modifying, any of the terms, conditions or provisions of the Supplement, all of which are hereby ratified and affirmed. In the event of a conflict between the provisions of this Memorandum of Supplement and the provisions of the Supplement, the provisions of the Supplement shall control. The Supplement shall be binding upon and inure to the benefit of the parties and their respective heirs, successors, and assigns, subject to the provisions of the Supplement.

IN WITNESS WHEREOF, the parties have executed this Memorandum of Supplement as of the day and year first above written.

WITNESSES:

Print Name: Jean M. Musa

Print Name: Steven B. Cole

"LESSOR"

Verizon Wireless Personal Communications LP
d/b/a Verizon Wireless

By:
Print Name: Hans F. Leutenegger
Its: Area Vice President, Network, South Area
Date: JULY 13, 2007

Print Name: CHERYL MARLIN

Print Name: Amy Worsta

"LESSEE"

New Cingular Wireless PCS, LLC

By:
Print Name: Doug O'Neil
Its: Executive Director, NFL
Date:

#4615370_v3

LESSOR ACKNOWLEDGMENT

STATE OF NORTH CAROLINA)
) ss:
COUNTY OF MECKLENBURG)

On the 13 day of July, 2007, before me personally appeared Hans F. Leutenegger and acknowledged under oath that he is the Area Vice President, Network, South Area of Verizon Wireless Personal Communications LP d/b/a Verizon Wireless, the limited partnership named in the attached instrument, and as such was authorized to execute this instrument on behalf of the limited partnership.

Catharine Lawson

Notary Public: Catharine Lawson
My Commission Expires: January 4, 2010

OFFICIAL SEAL
Notary Public, North Carolina
County of Cabarrus
CATHARINE LAWSON
My Commission Expires January 4, 2010

LESSEE ACKNOWLEDGMENT

STATE OF FLORIDA
COUNTY OF Seminole) ss:

On the 25th day of June, 2007, before me personally appeared Doug O'Neil, and acknowledged under oath that he is the Executive Director, NFL of New Cingular Wireless PCS, LLC, the Delaware limited liability company named in the attached instrument, and as such was authorized to execute this instrument on behalf of the limited liability company.

Cheryl Marlin

Notary Public: CHERYL MARLIN
My Commission Expires:

CHERYL MARLIN
MY COMMISSION # DD 554488
EXPIRES: June 2, 2010
Bonded Thru Notary Public Underwriters

City of Sanibel

800 Dunlop Road
Sanibel, Florida 33957-4096

www.mysanibel.com

AREA CODE - 239

CITY COUNCIL	472-4135
ADMINISTRATIVE	472-3700
BUILDING	472-4555
EMERGENCY MANAGEMENT	472-3111
FINANCE	472-9615
LEGAL	472-4359
NATURAL RESOURCES	472-3700
PARKS & RECREATION	472-9075
PLANNING	472-4136
POLICE	472-3111
PUBLIC WORKS	472-6397
UTILITIES	472-1008

Recycled paper

September 11, 2007

Holland & Knight, LLP
Ms. Amy E. Armond
One East Broward Blvd, Suite 1300
Fort Lauderdale, FL 33301-1865

Dear Ms. Armond:

Please find enclosed three (3) copies of the executed Tri-Party Sublease Agreement between Verizon Wireless, New Cingular Wireless PCS, LLC and the City of Sanibel.

If you have any questions please call me at (239) 472-3700.

Cordially,

Pamela Smith, CMC
City Clerk

Enclosure

PBS/rjs

Cc: Judie Zimomra, City Manager

Holland+Knight

Tel 954 525 1000
Fax 954 463 2030

Holland & Knight LLP
One East Broward Boulevard, Suite 1300
Fort Lauderdale, FL 33301-1865
www.hklaw.com

Amy E. Armond
954 468 7988
amy.armond@hklaw.com

CITY OF SANIBEL
LEGAL DEPARTMENT

July 20, 2007

VIA FEDEX

City of Sanibel
800 Dunlop Road
Sanibel, Florida 33957
Attention: Kenneth B. Cuyler, Esq., City Attorney

Dear Ken:

Please find enclosed four (4) partially-executed originals of the Tri-Party Sublease Agreement between Verizon Wireless Personal Communications LP d/b/a Verizon Wireless, New Cingular Wireless PCS, LLC ("Cingular"), and City of Sanibel (the "City"). Verizon Wireless and Cingular have already executed these originals. Please have the enclosed originals signed by the City at the August 21 City Council meeting, and return three (3) fully executed originals to me at the address set forth above. Also, please find enclosed a copy of the fully-executed Supplement between Verizon Wireless and Cingular for your files.

Please let me know if you have any questions or comments.

Regards,

HOLLAND & KNIGHT LLP

By: Amy E. Armond
Amy E. Armond

4682582_v1

CONDITIONS AND CAPACITY REPORT
EXISTING TELECOMMUNICATIONS FACILITIES AND TELECOMMUNICATIONS TOLERANT AREAS

Prepared by the Planning Department
February 2008

INTRODUCTION

On September 18, 2007, City Council directed the City Manager to:

1. Initiate a review of the designated telecommunications tolerant areas and evaluate whether these sites remain physically available in light of changes in build-out, ownership, land use or any other relevant issues that may affect the site's availability and capacity; and

2. Temporarily halt the acceptance and/or processing of any permits relating to the placement of telecommunication devices on all tolerant sites during this evaluation.

Based upon City Council's direction, the Planning Department has prepared the following report which provides an assessment and recommendations regarding the following:

- Current status of the City's existing telecommunication sites and facilities and recommendations to update Sec. 126-1533 (a) and (b) of the Land Development Code that identifies existing telecommunication facilities.
- Current status, conditions and basic capacity of the Telecommunication Tolerant Areas designated by Sec. 126-1536 of the Land Development Code.
- Recommendations necessary to update and modify the City's Telecommunication Master Plan and Telecommunication Tolerant Areas.

Background

To comply with the Federal Telecommunications Act of 1996 and all other lawful regulations passed pursuant to this Act, in 1999, the City of Sanibel adopted its current telecommunications ordinance (No. 99-07). This ordinance, which forms the City's regulations pertaining to telecommunications device, was codified under Article XVII of the Land Development Code. Since the City adopted its telecommunications ordinance, Article XVII of Land Development Code has not been amended.

The Federal Telecommunications Act of 1996 specifically bars all state and local governments from prohibiting the placement of wireless facilities, if the prohibition

prevents the provider from offering services. To this date, there has been only one new telecommunications antenna support structure, (i.e., a monopole tower with 3-antennas constructed at the Wulfert Wastewater Treatment Plant) that has been permitted by the City under Article XVII of the Land Development Code.

Telecommunications Master Plan

As a part of Ordinance No. 99-07, the City's telecommunications master plan was developed to establish general and specific standards for the operation of wireless telecommunications facilities and their required components, layout and design while also paying particular attention to those wireless services expressly protected by the Telecommunications Act of 1996 and to insure compliance with the Sanibel Plan.

As a result, the Master Plan sets forth the importance of restricting the height of all vertical support structures for telecommunications antennas and requires that all new or replacement towers be of a monopole type so as to minimize, as much as possible, their visual impact upon the community and to lessen their potential hazard to the environment and migratory birds. It is furthermore the City's policy under this plan to encourage the sharing of telecommunications tower facilities (via collocation design) in order to reduce their numbers and visual obtrusiveness.

To assist telecommunications providers in establishing quality service for their customers, thirteen (13) areas have been designated throughout the City, under the Telecommunications Master Plan, as being Telecommunications Tolerant Areas.

Telecommunications Tolerant Areas

In most areas throughout the City telecommunications antennas and support structures may be permitted at or below the height of 45 feet above sea level. To provide quality coverage and service telecommunications providers may require either multiple sites for their support structures constructed at lower heights or fewer sites for those support structures constructed at much greater height in order to achieve a desired signal propagation and strength for their customer's devices.

In general, these designated Telecommunications Tolerant Areas are either publicly or quasi-publicly owned and utilize properties containing existing structural and ground facilities and improvements. These areas are typically buffered from residential view by sufficient vegetation and/or distance. Some of these areas even have existing telecommunications antenna support structures that can be replaced or rebuilt to support additional antennas. It is within these designated telecommunications tolerant areas where new antenna support structures (greater than 45 feet above sea level and up to 149 feet above ground level) may be permitted upon demonstrating compliance with the specific and general permitting procedures as outlined in the Land Development Code.

Under the Master Plan, it is the City's policy to encourage telecommunications providers to install all new antenna support structures between 45 and 149 feet above ground level on one of the identified tolerant parcels of land listed in the following Table 1. The location of the Telecommunication Tolerant Areas are also identified by the attached Figure 1. Current aerial photographs of each of the Telecommunication Tolerant Areas are also provided as Figures 2 through 14.

Table 1
Existing Telecommunications Tolerant Areas as Designated by the City Master Plan Under Land Development Code Section 126-1536

(1) City public works maintenance yard (750 Dunlop Road).
(2) Donax Street wastewater reclamation facility (930 Donax Street).
(3) Wulfert Road advanced wastewater reclamation facility (2222 Wulfert Road).
(4) The site of the existing AT&T tower (701 Opre Ave.)
(5) Sprint Florida telephone switching office (3445 Sanibel-Captiva Road).
(6) The Sanibel School (3840 Sanibel-Captiva Road).
(7) Recreation field next to the Sanibel School.
(8) J. N. "Ding" Darling National Wildlife Refuge maintenance yard (3900 Sanibel-Captiva Road).
(9) Lee County Electric Cooperative Electrical Substation (5050 Sanibel-Captiva Road).
(10) Lee County Electrical Cooperative Pine Island to Sanibel power transmission line support poles.
(11) Island Water Association (IWA) reverse osmosis plant (3651 Sanibel-Captiva Road).
(12) Sanibel Fire and Rescue District Station No.2 (5171 Sanibel-Captiva Road).
(13) IWA water storage tank (5566 Sanibel-Captiva Road).

Conditions and Capacity Report

Land Development Code Section 126-1536 (h) states that "For all the telecommunications tolerant areas listed in subsection (b) of this section, these recommendations should remain in place as long as the land is zoned and used for the purpose for which it was zoned and used in August 1999. Should the zoning or usage change, the designation of telecommunications tolerant areas should be reviewed to ensure that this is still a correct designation".

To assess whether or not the City's telecommunications areas are still appropriately designated, the Planning Department held individual meetings with the respective managers or property owners for each of the telecommunications tolerant areas. The Planning Department appraised the designated telecommunications areas with regards to any changes in ownership, land use, or availability status, including any site improvements or expansions that may have occurred since August 1999. The representatives for each of the properties were also asked whether they were considering any site improvements or operational needs in the foreseeable future.

After these meetings were held and site inspections were conducted, the Department was then able to assess each of the designated tolerant areas for remaining availability and capacity. As attached to this report, an assessment for each of the 13 designated areas can be reviewed under Table 2 titled **Analysis Report of the Conditions and Available Capacity of Existing Telecommunications Tolerant Areas**.

The Planning Department also met with the City Manager, City Attorney, Department of Public Works, Department of Natural Resources, MIS Department and Police Department to review drafts of this report in November 2007 and January 2008 in order to complete the preparation of this final site conditions and capacity assessment report for telecommunications tolerant areas.

Findings and Recommendations

Existing Telecommunications Facilities

Under Land Development Code Section 126-1533, Existing Antenna Support Structures (a) & (b), the following two tables listed below show the existing antenna support structures located throughout the City, the property owners and the height and type of support structures as they existed when Ordinance No. 99-07 was adopted.

(a) The four existing antenna support structures within the city over 100 feet in height.

Owner	Height (feet)	Type
Wireless One	220	Lattice
Sprint Telephone	165	Guyed
City of Sanibel (city hall)	146.5	Lattice
School district of Lee County	106	Guyed

Comments
The Wireless One, Sprint Telephone and city towers are multi-user structures. The school district tower was a single-user structure.

Since 1999, Sprint Telephone is now Embarq. The 106 feet guyed tower that existed at the Sanibel School was destroyed in August 2004 as a result of Hurricane Charley. A monopole antenna support structure at a height of 149 feet was permitted and built in 2007 at the Wulfert Road Wastewater Treatment Plant.

Recommendation

Staff recommends that this subsection (a) of the Code be corrected to reflect the noted changes.

(b) Other, smaller single-user towers (less than 100 feet high) within the city.

Owner	Height (feet)	Type
J. N. "Ding" Darling National Wildlife Refuge	95	Guyed
Island Water Association	79	Lattice
Sanibel Fire Control District Station #1	79	Lattice
Amoco Gas Station	76	Guyed
Sanibel Fire Control District Station #2	67	Guyed
Island Garage	62	Guyed
Mobil Gas Station	49	Guyed
City of Sanibel (public works department)	44	Guyed

Comments
In 2005, Sanibel Fire Control District Station #1 received by variance permission to replace its existing tower with a new lattice tower not to exceed a maximum height of 61 feet above ground. Since 1999, the Federal Wildlife Refuge Maintenance has lost their existing guyed tower, as a result of Hurricane Charlie, in 2004.

Recommendation
Staff recommends that this sub-section (b) of the Code be corrected to reflect the above noted changes.

Telecommunication Tolerant Areas

As a result of the Planning Department's evaluation of the designated Telecommunication Tolerant Areas, the following properties no longer qualify as viable sites where the installation of telecommunications devices may be considered.

1. The tolerant areas located at the Sanibel Fire and Rescue Station #2, Donax Wastewater Treatment Facility, Sanibel School and its Recreation Center and Fields have all implemented various site expansions and/or redevelopment projects and improvements to the extent where the amount of available undeveloped space that existed when the City adopted Telecommunications Ordinance No 99-07 has been significantly reduced or eliminated.

2. Since September 11, 2001 Island Water Association has implemented various homeland security measures for its plant's operation sites that now prohibit unrestricted access onto their properties by other utilities.

3. Lee County Electric Co-op representatives have indicated to the Planning Department that their company's policy now discourages use of their transmission line support poles for telecommunications devices. As these poles serve as the only means for delivering electrical service from the mainland to the Sanibel substation the attachment of such devices onto the support poles could compromise these facilities resulting in electric service interruption and should be avoided.

4. Since the City adopted Telecommunications Ordinance No. 99-07, the only monopole support structure currently within the City was permitted in March of 2006 at the Wulfert Road Wastewater Treatment Plant. This tower was designed for the collocation of three telecommunications antennas. At this time, two of the spaces on this tower are occupied by telecommunications service providers Verizon and AT&T. The remaining space on this tower is reserved for use by the City for future emergency communications needs. As a result, there is no further available capacity existing at this location.

5. The City's Wastewater Reclamation Plant and Facility, located at 930 Donax Street, has added additional plant improvements reducing almost all of the available site capacity that did exist when Ordinance No. 99-07 was adopted. Any consideration for putting a new monopole tower and related equipment at this site would require an area that is typically 50'x 50' in size. Presently it would be difficult, if not impossible, to accommodate such an area of this size at this location. However, it may be feasible, subject to further analysis, to utilize a much smaller area of the site for limited telecommunications equipment that may not involve a typical monopole design. As a result of the Planning Department's assessment of the Donax Plant it is recommended that the designated use of this site for telecommunications purposes be reclassified to reflect that the property has limited capacity for a typical stand alone telecommunications antenna support structure and that the primary and intended use of this property, as it is and continues to be in the future, is to function as a wastewater reclamation facility. The installation of any form of telecommunication facilities will require further engineering and environmental analysis.

ATTACHMENTS

1. **TABLE 2-ANALYSIS REPORT OF THE CONDITIONS AND AVAILABILE CAPACITY OF EXISTING TELECOMMNICATIONS TOLERANT AREAS**
2. **SITE AERIAL OF THE EXISTING TELECOMMUNICATIONS TOLERANT AREAS 1-13**
3. **CURRENT TELECOMMUNICATIONS TOLERANT AREAS MAP**

Mayor Denham made a motion, seconded by Councilman Pappas, to accept Dr. Pati's resignation and thank him for his contributions as a member of the Wildlife Committee.

The motion carried

NEW BUSINESS

Reports from Planning Department

Report from Planning Department regarding effective date for new Flood Insurance rate map

Mr. Duffy spoke to the following:

- August 28, 2008 new flood rate map would become effective
- Working with the Building Department to make residents aware
- Amendments to the Land Development Code (LDC)
- Public hearings in May and June
- Effort began early 2005 with announcement from FEMA that coastal map would change
- Retained civil and coastal engineering firms to evaluated maps
- Based on evaluated maps appeal and accepted by FEMA
- Provided another 30-day comment period with no specific comments

Discussion ensued regarding communicating information to community, annual mailing, City website, workshops, public notices, potential insurance premium rate changes for the average homeowners, Sanibel one of the highest community rating system at 5, and LDC allow premiums to stay lower.

Report on conditions and capacity of telecommunication tolerant areas

Mr. Duffy gave the following report:

- 2007 direction from City Council for staff to initiate a review of designated telecommunication tolerant areas and evaluate if sites remain physically available
- Council direction was to halt acceptance of any permits
- 13 telecommunication tolerant sites on Sanibel
- Recommend a number of amendments
- Report provides 1996 Telecommunication Act
- Defines basic telecommunication mater plan and elements
- Telecommunication 45 feet and below treated as long-form applications and only on one of thirteen sites
- Review of facilities with aerial photos
- Met with property owners and telecommunication providers
- Report noted 2 sections; 1) property available for 100 feet or higher; and 2) less than 100-feet
- Made a number of recommendations
- 5 of 13 areas recommend 5 sites be deleted; 1) Wulfert site at full capacity; 2) Island Water Association (IWA) – 2 sites; 1) 3651 San-Cap Road reverse osmosis site and 2) 5566 San-cap Road Water plant – IWA could not entertain potential land transfers and access due to 9-11 for anything other than the primary mission of providing water for the island
- LCEC electrical poles crossing to Pine Island and policy changed and deleting electrical poles from telecommunications sites
- Donax Plant site 90% consumed and no longer capacity to support telecommunication facilities

Discussion ensued regarding in compliance with the telecommunications law, Mr. Duffy stated that telecommunication service was required to be provided, does recommendations provide adequate service,

Mr. Duffy answered by removing the Donax Plant site it would be possible to have a gap on the east end of the island and may need to allow a site through conditional use, very limited of inventory for potential sites on the east end of the island, delay changing LDC amendments until staff receives a consultant input for communication needs, Mr. Duffy answered that a number of urban/suburban locations and the issue there was no infrastructure higher than the tree canopy to distribute the signal and the monopole may be the primary method to serve Sanibel, unique opportunity to review placement of telecommunication towers, Mr. Cuyler stated that looking at a time frame because there are tolerant resistant areas noted in the code, he further stated Council may want to continue a 2-step process with amending what staff was aware of currently and come back to Council later for additional information, were there any consultants and the time for possible work, Lighthouse not a site because it is an historic site, code prohibits anything on an historic structure, with new technology there may be a possibility to attached something to the lighthouse, and leave historic sites alone.

Public Comment
Harvey Tower spoke to modifying existing towers so more facilities could be added. He also stated that in northern California telecommunication towers were adapted to the environment by blending.

Ms. Zimomra noted that when the Wulfert telecommunications tower was approved there had to be co-location of facilities. She asked if Council wanted staff to do more research and bring back to Council for alternative sites.

Council answered yes.

Councilman Pappas made a motion, seconded by Councilmember Johnston, to direct staff to do more research in the area of new technology and co-location.

The motion carried.

Council asked if there was a contract for sale of the Knave property. Mr. Duffy answered that there had been recent survey work.

RESOLUTION 08-051 OF THE CITY COUNCIL OF THE CITY OF SANIBEL EXPRESSING ITS INTENT TO DECLARE A SPECIAL ASSESSMENT TO FUND A PUBLIC IMPROVEMENT AS AUTHORIZED BY THE HOME RULE PROVISION OF THE FLORIDA CONSTITUTION, GENERAL LAW AND THE SANIBEL CHARTER FOR THE EXPANSION AND EXTENSION OF THE SANIBEL SEWER COLLECTION SYSTEM; SAID PROJECT TO BE REFERRED TO AS THE "SANIBEL SEWER SYSTEM PHASE 5 EXPANSION PROJECT"; ADOPTING THE PROCEDURES SET FORTH IN CHAPTER 170, FLORIDA STATUTES; PROVIDING FOR A DESCRIPTION OF THE NATURE AND LOCATION OF THE IMPROVEMENT, THE MANNER OF LEVYING ASSESSMENTS, THE ESTIMATED COST AND THE DESCRIPTION OF THE LANDS UPON WHICH THE ASSESSMENT SHALL BE LEVIED, AND OTHER MATTERS REQUIRED BY CHAPTER 170, FLORIDA STATUTES; AND PROVIDING AN EFFECTIVE DATE
Ms. Zimomra read the title of Resolution 08-051.

Mr. Cuyler spoke to the following:

- Initiation of the assessment process for Sanibel Bayous
- Subsequent hearings
- Property owners would receive a mailing of hearing announcement
- Discussion of funding

PAY RANGES FOR ALL JOB CLASSIFICATIONS; AUTHORIZING THE CITY MANAGER TO AMEND JOB DESCRIPTIONS AS NECESSARY TO KEEP SUCH DESCRIPTIONS CURRENT; AND PROVIDING AN EFFECTIVE DATE

Ms. Zimomra read the title of Resolution 08-116. She explained that every year a position audit was conducted to see if duties and training was applicable to the job being done, and routinely complete a regional competivness salary audit. She further explained that several years ago salaries where increased to match the market, but this coming year salaries would continue at the same level. She explained staff recommends that the salary band would be lowered by 15% for all positions.

Mr. Cuyler stated that attachments a and b were in the Council packet, but not attached to the resolution.

Mayor Denham made a motion, seconded by Councilmember Johnston, to adopt Resolution 08-116.

The motion carried.

Discussion ensued regarding employees performing work that other municipalities contract out, Ms. Zimomra stated that a number of services were contracted services.

d. Approval of staff recommendation to decline the offer to purchase windstorm, hail and storm surge insurance coverage for the Fishing Pier, boardwalks and dune walkovers from the Florida League of Cities at a cost of $64,475.57 for fiscal year 2008-2009

Ms. Zimomra stated that this was a new offering by the Florida League of Cities and staff had evaluated to offer and recommended against the purchase.

e. Accept the ranking of the selection committee and authorize the City Manager to enter into contract negotiations with Tetra Tech for a 3-year as needed contract for Wastewater Engineering Services (including renewing the Wulfert and Donax Operating Permits Renewal, Re-use Studies, additional Noise and Odor Control Studies, and Return Activated Sludge Studies) ($110,000 is budgeted in the FY 08-09 budget for this work)

Ms. Zimomra stated that every other year a contractor was hired to perform as needed work. She further spoke to the upcoming permit renewal for both sewer plants.

g. Approval of a tri-party sublease agreement between the City of Sanibel, Verizon Wireless Personal Communications, LP d/b/a Verizon Wireless and T-Mobile South, LLC, under which the City will receive rental revenues from a sublease between Verizon Wireless and T-Mobile for existing space on the telecommunications monopole located at the City's Wulfert Reclamation Plant property (2222 Wulfert Road) (such agreement required by the original land lease agreement between the City and Verizon Wireless), and authorize the Mayor to execute such agreement

Mr. Cuyler stated at the Wulfert Plant telecommunications site property was leased by Verizon with federal requirements for rental. He further stated that there were four spaces on the tower with Verizon having the first space, the second site would be the City, third was AT&T, and the 4th spot would be T-Mobile.

Discussion ensued regarding areas with no service, problem if phones go out in those areas with medical needs, Ms. Zimomra spoke to Council reviewing telecommunications sites, updating possible telecommunication site and gaps in service being on the east end, a company would need to approach the City regarding the east end site, pursue an application, meet the code, and come to Council, Mr. Cuyler stated that T-Mobile would help with gaps, he asked how many gaps were noted on the island, Ms. Zimomra stated that the stronger the signal the more users affected, second post on tower was held for

public safety, how extensive was the safety problem on island, Ms. Zimomra stated that there were complaints from the west end, which had decreased due to the placement of the tower at the Wulfert Plant, depends on carrier, should staff draft a letter and identify private carriers with the potential need, Council by consensus agreed to send a letter to carriers with island telecommunication needs.

a. Approval of Minutes – September 06, 2008 Regular Rescheduled Meeting

f. Approval of an agreement between the City of Sanibel and the Florida Department of Revenue restricting access to confidential State Tax Information as required by State Statute and authorize the City Manager to execute same

Mayor Denham made a motion, seconded by Councilmember Johnston, to approve Consent Agenda items (a), (d), (e) (f), and (g).

The motion carried.

OLD BUSINESS
Water Quality Issues
Staff Reports

Dr. Loflin reported on the following:

- Meeting last week regarding the Lake Okeechobee release schedule
- New plan flexibility to consider elements
- Requested releases stop due to rainfall
- Reviewed impacts of releases in estuary
- SCCF monitoring recon systems was very useful in discussion
- Agreed to stop releases immediately
- Additional salinity between 12 and 27
- Matlacha data came from Sanibel testing (San Carlos Bay & Pine Island Sound) water quality testing paid for by TDC
- ACOE trying to stop rapids raise in level of lake, and providing more capacity in Lake Okeechobee in case of a storm
- Requested the pulse releases would be very gradual and average be 3,000 rather than 4,000 cubic feet per second
- Meeting Thursday, September 18th
- Would request the measurement be determined from S-79 rather than S-77 to take in account of basin flows and local conditions

Discussion ensued regarding ACOE and SFWMD discontinuing the Lake Okeechobee releases, someone new at the ACOE helm next July, better quantitative ways to measure nitrogen, oxygen and other materials in the water, should a letter be sent out regarding the releases being terminated, and should wait to see what further action would be taken by the end of the rainy season, any possible changes of water storage areas north of the lake, Dr. Loflin stated the question was asked and there was no response to allow more water storage, Council asked Dr. Loflin to report on the progress of water storage at the next Council meeting, affects of Fay diminishing,

Dr. Loflin reported on US Sugar land acquisition as follows:

- Complication on appraisals
- SFWMD selling while trying to settle the acquisition
- 2-month delay, previously closing in November
- Proposal from staff include a change in the flow way
- Mill in the flow way direction and want to keep the mill as an inland port with more roads
- Map shows to flow way narrower and more to the west

STREET PAVING SPECIAL ASSESSMENT PROJECTS; AND PROVIDING AN EFFECTIVE DATE

f. Staff update regarding an offer to sell to the City property located on the west side of Tarpon Bay Road between Sanibel Captiva Road and the vacant former restaurant building

VERIZON HAS REQUESTED THAT THIS ITEM BE PULLED UNTIL THE JUNE 05, 2012 CITY COUNCIL MEETING (PLEASE SEE ATTACHMENT)

g. Matters relating to the Communication Tower approved in Resolution 11-007 to be constructed by Verizon Wireless at the Donax Waste Water Reclamation Facility property

   i. Direction to Verizon Wireless on two issues pursuant to the requirement of Resolution 11-007 (which approved the communication tower at the Donax site):

      1. Whether the flag pulley system is to be constructed on the inside or the outside of the communication tower (Note: The communication tower is to be constructed with a "stealth design" as a flag pole with antennae on the inside of the pole)
      2. Whether down lighting will be required as part of construction in the event the flying of a flag is authorized at a later date

11. **CITY MANAGER**

a. Informational Items

   i. Blind Pass Update
   ii. Building Department Monthly Revenue Report, March, 2012
   iii. Building Department Monthly Permit and Inspections, March,2012
   iv. Planning Department Permit Activity Report, March, 2011
   v. Planning Department Code Enforcement Activity Report, March, 2012
   vi. Grease Trap Report, April, 2012
   vii. Sanibel Museum & Village, Inc., 2nd Quarter Financial Report
   viii. Lee County Electric Cooperative Scheduled Preventative Maintenance Trim

12. **CITY ATTORNEY'S REPORT**

PAY RANGES FOR ALL JOB CLASSIFICATIONS; AUTHORIZING THE CITY MANAGER TO AMEND JOB DESCRIPTIONS AS NECESSARY TO KEEP SUCH DESCRIPTIONS CURRENT; AND PROVIDING AN EFFECTIVE DATE

Ms. Zimomra read the title of Resolution 08-116. She explained that every year a position audit was conducted to see if duties and training was applicable to the job being done, and routinely complete a regional competivness salary audit. She further explained that several years ago salaries where increased to match the market, but this coming year salaries would continue at the same level. She explained staff recommends that the salary band would be lowered by 15% for all positions.

Mr. Cuyler stated that attachments a and b were in the Council packet, but not attached to the resolution.

Mayor Denham made a motion, seconded by Councilmember Johnston, to adopt Resolution 08-116.

The motion carried.

Discussion ensued regarding employees performing work that other municipalities contract out, Ms. Zimomra stated that a number of services were contracted services.

d. Approval of staff recommendation to decline the offer to purchase windstorm, hail and storm surge insurance coverage for the Fishing Pier, boardwalks and dune walkovers from the Florida League of Cities at a cost of $64,475.57 for fiscal year 2008-2009

Ms. Zimomra stated that this was a new offering by the Florida League of Cities and staff had evaluated to offer and recommended against the purchase.

e. Accept the ranking of the selection committee and authorize the City Manager to enter into contract negotiations with Tetra Tech for a 3-year as needed contract for Wastewater Engineering Services (including renewing the Wulfert and Donax Operating Permits Renewal, Re-use Studies, additional Noise and Odor Control Studies, and Return Activated Sludge Studies) ($110,000 is budgeted in the FY 08-09 budget for this work)

Ms. Zimomra stated that every other year a contractor was hired to perform as needed work. She further spoke to the upcoming permit renewal for both sewer plants.

g. Approval of a tri-party sublease agreement between the City of Sanibel, Verizon Wireless Personal Communications, LP d/b/a Verizon Wireless and T-Mobile South, LLC, under which the City will receive rental revenues from a sublease between Verizon Wireless and T-Mobile for existing space on the telecommunications monopole located at the City's Wulfert Reclamation Plant property (2222 Wulfert Road) (such agreement required by the original land lease agreement between the City and Verizon Wireless), and authorize the Mayor to execute such agreement

Mr. Cuyler stated at the Wulfert Plant telecommunications site property was leased by Verizon with federal requirements for rental. He further stated that there were four spaces on the tower with Verizon having the first space, the second site would be the City, third was AT&T, and the 4th spot would be T-Mobile.

Discussion ensued regarding areas with no service, problem if phones go out in those areas with medical needs, Ms. Zimomra spoke to Council reviewing telecommunications sites, updating possible telecommunication site and gaps in service being on the east end, a company would need to approach the City regarding the east end site, pursue an application, meet the code, and come to Council, Mr. Cuyler stated that T-Mobile would help with gaps, he asked how many gaps were noted on the island, Ms. Zimomra stated that the stronger the signal the more users affected, second post on tower was held for

public safety, how extensive was the safety problem on island, Ms. Zimomra stated that there were complaints from the west end, which had decreased due to the placement of the tower at the Wulfert Plant, depends on carrier, should staff draft a letter and identify private carriers with the potential need, Council by consensus agreed to send a letter to carriers with island telecommunication needs.

a. Approval of Minutes – September 06, 2008 Regular Rescheduled Meeting

f. Approval of an agreement between the City of Sanibel and the Florida Department of Revenue restricting access to confidential State Tax Information as required by State Statute and authorize the City Manager to execute same

Mayor Denham made a motion, seconded by Councilmember Johnston, to approve Consent Agenda items (a), (d), (e) (f), and (g).

The motion carried.

OLD BUSINESS

Water Quality Issues

Staff Reports

Dr. Loflin reported on the following:

- Meeting last week regarding the Lake Okeechobee release schedule
- New plan flexibility to consider elements
- Requested releases stop due to rainfall
- Reviewed impacts of releases in estuary
- SCCF monitoring recon systems was very useful in discussion
- Agreed to stop releases immediately
- Additional salinity between 12 and 27
- Matlacha data came from Sanibel testing (San Carlos Bay & Pine Island Sound) water quality testing paid for by TDC
- ACOE trying to stop rapids raise in level of lake, and providing more capacity in Lake Okeechobee in case of a storm
- Requested the pulse releases would be very gradual and average be 3,000 rather than 4,000 cubic feet per second
- Meeting Thursday, September 18th
- Would request the measurement be determined from S-79 rather than S-77 to take in account of basin flows and local conditions

Discussion ensued regarding ACOE and SFWMD discontinuing the Lake Okeechobee releases, someone new at the ACOE helm next July, better quantitative ways to measure nitrogen, oxygen and other materials in the water, should a letter be sent out regarding the releases being terminated, and should wait to see what further action would be taken by the end of the rainy season, any possible changes of water storage areas north of the lake, Dr. Loflin stated the question was asked and there was no response to allow more water storage, Council asked Dr. Loflin to report on the progress of water storage at the next Council meeting, affects of Fay diminishing,

Dr. Loflin reported on US Sugar land acquisition as follows:

- Complication on appraisals
- SFWMD selling while trying to settle the acquisition
- 2-month delay, previously closing in November
- Proposal from staff include a change in the flow way
- Mill in the flow way direction and want to keep the mill as an inland port with more roads
- Map shows to flow way narrower and more to the west

07/08 – 160

Lessee's Site ID: Sanibel Island Wulfert Road / 68907

TRI-PARTY SUBLEASE AGREEMENT

This Tri-Party Sublease Agreement ("Agreement") is made and entered into this 16TH day of SEPTEMBER, 2008 by and among CITY OF SANIBEL, with a mailing address located at 800 Dunlop Road, Sanibel, Florida 33957, hereinafter designated "Owner", and VERIZON WIRELESS PERSONAL COMMUNICATIONS LP d/b/a Verizon Wireless, with its principal office located at One Verizon Way, Mail Stop 4AW100, Basking Ridge, New Jersey 07920, hereinafter designated "Lessee", and T-Mobile South LLC, a Delaware Limited Liability Company, with its mailing address located at 3407 W. Dr. Martin Luther King, Jr. Blvd., Tampa, FL 33607, hereinafter referred to as "Sublessee".

RECITALS

WHEREAS, Owner is the owner of certain real property situated at 2222 Wulfert Road, City of Sanibel, Lee County, Florida (hereinafter the "Property").

WHEREAS, Owner and Lessee entered into that certain Lease Agreement dated May 18, 2006 (hereinafter referred to as the "Prime Lease"), whereby Lessee leased a portion of the Property legally described in Exhibit 1 attached hereto (the "Leased Property") for the purpose of constructing and operating a communications tower and facilities.

WHEREAS, Sublessee desires to sublease from Lessee both ground space and tower space to install, maintain and operate a communications facility.

WHEREAS, Section 7(C) of the Prime Lease requires any sublessee co-locating within the Leased Property to execute this Agreement.

WHEREAS, this Agreement shall constitute Lessee's written notice to Owner of a sublease of the Leased Property as required by Section 10(B) of the Prime Lease.

NOW, THEREFORE, for and in consideration of the covenants and conditions set forth herein, and other good and valuable consideration, the receipt and sufficiency of which are hereby acknowledged, the parties hereto hereby agree as follows:

1. The foregoing Recitals are true and correct and are incorporated herein by reference.

2. Pursuant to Section 7(C) of the Prime Lease, Sublessee acknowledges and agrees that any sublease rent due under that certain Supplement dated SEPTEMBER 5, 2008, by and between Lessee and Sublessee, hereinafter referred to as the "Sublease", is to be split equally between Owner and Lessee and that Sublessee is obligated on the first (1st) day of each month during the term of the Sublease to pay Owner for its fifty percent (50%) share of said rent. Said sublease rent due to the Owner by Sublessee will terminate upon the earlier termination or expiration of the Sublease with Lessee. In the event Sublessee fails to timely make any payment

to Owner due under this Agreement, and such failure continues for more than fifteen (15) days after receipt of written notice from Owner to Sublessee, then Sublessee agrees that Owner shall be entitled to exercise against Sublessee all remedies available to a landlord under a lease in the State of Florida. The foregoing shall not in any way limit Lessee's rights and remedies against Sublessee for Sublessee's failure to perform under the Sublease.

3. Sublessee's rights under the Sublease and its use of the Leased Property are subject in all respects to the terms and conditions of the Prime Lease, including without limitation, the interference provisions set forth in Section 18(B) of the Prime Lease. Sublessee shall not be obligated for the payments of any rent or other monies due under the Prime Lease except as contemplated in the Sublease.

4. All notices hereunder must be in writing and shall be deemed validly given if sent by certified mail, return receipt requested or by commercial courier, provided the courier's regular business is delivery service and provided further that it guarantees delivery to the addressee by the end of the next business day following the courier's receipt from the sender, addressed as follows (or any other address that the party to be notified may have designated to the other by notice delivered in accordance with this paragraph):

Owner: City of Sanibel
c/o City Manager
800 Dunlop Road
Sanibel, Florida 33957

Copy to Kenneth B. Cuyler, Esq., City Attorney
800 Dunlop Road
Sanibel, Florida 33957

Lessee: Verizon Wireless Personal Communications LP
d/b/a Verizon Wireless
180 Washington Valley Road
Bedminster, New Jersey 07921
Attention: Network Real Estate

Sublessee: T-Mobile USA, Inc.
12920 SE 38th Street
Bellevue, WA 98006
Attention: PCS Lease Administrator
With a copy to Attention: Legal Dept.

Copy to T-Mobile South LLC
3407 W. Dr. Martin Luther King. Jr. Blvd.
Tampa, FL 33607
Attn: Lease Administration Manager
With a copy to Attn: Legal Dept

Notice shall be effective upon mailing or delivering the same to a commercial courier, as permitted above.

[SIGNATURES APPEAR ON THE FOLLOWING PAGE]

IN WITNESS HEREOF, the parties hereto have executed this Agreement as of the date first written above.

WITNESSES:

By: Dawn Osterman-Harris
Name: Dawn Osterman-Harris

By: _____
Name: Susan E. Long

LESSEE:
VERIZON WIRELESS PERSONAL COMMUNICATIONS LP
d/b/a Verizon Wireless

By: _____
Name: Hans F. Leutenegger
Title: Area Vice President, Network, South Area
Date: 9/5/2008

OWNER:
CITY OF SANIBEL

By: _____
Name: ~~Mick~~ Denham (Mick)
Title: ~~Vice~~ Mayor

Attest: _____
By: Pamela Smith
Title: City Clerk

Financial sufficiency approved:
_____
Name: ~~Renee M. Lynch~~ SYLVIA EDWARDS
Title: Finance Director

Approved as to form:
_____
Name: Kenneth B. Cuyler
Title: City Attorney

WITNESSES:

By: _____
Name: Julie Dubernard

By: _____
Name: Tamara McLaren

SUBLESSEE:
T-Mobile South LLC

By: _____
Name: Harlan Kickhoefer
Title: Director, Engineering & Operations
Date: 8/25/08

5389896_v2

EXHIBIT 1

Legal Description of Leased Property

DESCRIPTION OF PARENT TRACT:

DESCRIPTION OF OWNER'S PROPERTY

A PORTION OF GOVERNMENT LOT 7, SECTION 12, TOWNSHIP 46 SOUTH, RANGE 21 EAST, LEE COUNTY, FLORIDA, BEING MORE PARTICULARLY DESCRIBED AS FOLLOWS:

COMMENCE AT THE SOUTHWEST CORNER OF SAID GOVERNMENT LOT 7, THENCE S89°58'04"E ALONG THE SOUTHERLY BOUNDARY OF SAID GOVERNMENT LOT 7 A DISTANCE OF 600.27 FEET TO THE POINT OF BEGINNING, SAID POINT LYING ON THE ARC OF A NON-TANGENT CIRCULAR CURVE CONCAVE TO THE SOUTHWEST (A RADIAL LINE THROUGH SAID POINT BEARS S48°29'03"W); THENCE NORTHWESTERLY ALONG THE ARC OF SAID CURVE HAVING FOR ITS ELEMENTS A RADIUS OF 440.00 FEET, A CENTRAL ANGLE OF 04°18'08", A CHORD DISTANCE OF 33.05 FEET, A CHORD BEARING OF N42°48'05"W, AN ARC DISTANCE OF 33.06 FEET; THENCE N45°01'47"E A DISTANCE OF 38.42 FEET; THENCE N44°58'13"W A DISTANCE OF 110.00 FEET; THENCE S45°01'47"W A DISTANCE OF 30.38 FEET TO A POINT ON THE ARC OF A NON-TANGENT CIRCULAR CURVE CONCAVE TO THE SOUTHWEST (A RADIAL LINE THROUGH SAID POINT BEARS S31°14'08"W); THENCE NORTHWESTERLY ALONG THE ARC OF SAID CURVE HAVING FOR ITS ELEMENTS A RADIUS OF 440.00 FEET, A CENTRAL ANGLE OF 38°14'08", A CHORD DISTANCE OF 244.29 FEET, A CHORD BEARING OF N75°37'08"W, AN ARC DISTANCE OF 247.54 FEET; THENCE N06°16'27"W A DISTANCE OF 101.00 FEET; THENCE S84°41'33"W A DISTANCE OF 20.00 FEET; THENCE N06°16'27"W A DISTANCE OF 34.00 FEET; THENCE N57°23'58"E A DISTANCE OF 225.59 FEET; THENCE S41°45'25"E A DISTANCE OF 166.64 FEET; THENCE N75°25'07"E A DISTANCE OF 167.91 FEET; THENCE S89°58'30"E A DISTANCE OF 110.34 FEET; THENCE S31°55'32"W A DISTANCE OF 126.33 FEET; THENCE S55°00'26"E A DISTANCE OF 215.49 FEET; THENCE S89°58'15"E A DISTANCE OF 151.78 FEET; THENCE S49°19'20"E A DISTANCE OF 64.31 FEET; THENCE S89°58'15"E A DISTANCE OF 158.09 FEET TO A POINT ON THE SOUTHERLY BOUNDARY OF SAID GOVERNMENT LOT 7; THENCE WESTERLY ALONG THE SOUTHERLY BOUNDARY OF SAID GOVERNMENT LOT 7 A DISTANCE OF 396.84 FEET TO THE POINT OF BEGINNING.

SAID PARCEL CONTAINS 8.770 ACRES MORE OR LESS.

EXHIBIT 1

Legal Description of Leased Property

DESCRIPTION OF LESSOR'S PROPERTY:

[redacted]

LESSEE'S LEASED PROPERTY

A PORTION OF [redacted]

COMMENCE AT [redacted] BOOK 2405, PAGE [redacted] PUBLIC RECORDS OF LEE COUNTY, FLORIDA; PROCEED SOUTH [redacted] OF 157.82 FEET; [redacted] EAST, A DISTANCE OF [redacted] FEET TO THE POINT OF BEGINNING [redacted] EAST, A DISTANCE OF [redacted] FEET; THENCE SOUTH [redacted] EAST, A DISTANCE OF [redacted] FEET; THENCE NORTH [redacted] WEST, A DISTANCE OF [redacted] FEET; THENCE NORTH 85°49'07" WEST, A DISTANCE OF [redacted] FEET TO THE POINT OF BEGINNING.

CONTAINING [redacted] SQUARE FEET, MORE OR LESS.

[redacted]

A PORTION OF TRACT "A" OF [redacted] PLAT BOOK 50, PAGE [redacted] PUBLIC RECORDS OF LEE COUNTY, FLORIDA; [redacted] A PORTION OF LANDS [redacted] OFFICIAL RECORDS BOOK 2405, PAGE [redacted] MORE PARTICULARLY DESCRIBED AS FOLLOWS:

COMMENCE AT THE POINT OF BEGINNING OF THOSE LANDS DESCRIBED IN OFFICIAL RECORDS BOOK 2405, PAGE [redacted] OF THE OFFICIAL PUBLIC RECORDS OF LEE COUNTY, FLORIDA; PROCEED SOUTH [redacted] EAST ALONG THE SOUTHERLY LINE OF SAID LANDS, A DISTANCE OF 157.82 FEET; THENCE NORTH [redacted] EAST, A DISTANCE OF [redacted] FEET TO THE POINT OF BEGINNING OF THE FOLLOWING DESCRIBED PARCEL; THENCE NORTH [redacted] WEST, A DISTANCE OF [redacted] FEET; THENCE NORTH [redacted] WEST, A DISTANCE OF [redacted] FEET; THENCE NORTH [redacted] WEST, A DISTANCE OF [redacted] FEET; THENCE SOUTH 78°40'57" WEST, A DISTANCE OF [redacted] FEET TO A POINT ON THE WESTERLY LINE OF LANDS DESCRIBED IN OFFICIAL RECORDS BOOK 2405, PAGE [redacted] ALSO BEING THE WESTERLY LINE OF TRACT "A", AS SHOWN ON PLAT BOOK 50, PAGE [redacted]; THENCE NORTH 08°16'27" WEST ALONG SAID WESTERLY LINE, A DISTANCE OF [redacted] FEET; THENCE NORTH 78°40'57" EAST, A DISTANCE OF [redacted] FEET; THENCE SOUTH [redacted] EAST, A DISTANCE OF [redacted] FEET; THENCE SOUTH 48°37'07" EAST, A DISTANCE OF [redacted] FEET; THENCE SOUTH [redacted] EAST, A DISTANCE OF [redacted] FEET; THENCE SOUTH [redacted] WEST, A DISTANCE OF [redacted] FEET TO THE POINT OF BEGINNING.

CONTAINING 11,712.8 SQUARE FEET, MORE OR LESS.

5389896_v2

R

Holland+Knight

Tel 954 525 1000
Fax 954 463 2030

Holland & Knight LLP
One East Broward Boulevard
P.O. Box 14070 (ZIP 33302-4070)
Fort Lauderdale, FL 33301
Michelle DeRosa
954 468 7975
michelle.derosa@hklaw.com

September 5, 2008

VIA FEDEX

Kenneth B. Cuyler, Esq.
City Attorney
City of Sanibel
800 Dunlop Road
Sanibel, Florida 33957

Re: Wulfert Road WWTP Verizon Wireless sublease to T-Mobile
Verizon Wireless Site I.D.: Sanibel Island Wulfert Road - 68907

Dear Ken:

In connection with the above matter, we are providing you the following documents to be placed on the agenda for the September 16th meeting:

1. One (1) original of the fully executed Agreement between Verizon Wireless and T-Mobile;

2. Three (3) originals of the Tri-Party Agreement which have been executed by Verizon and T-Mobile.

Once the Tri-Party Agreement has been executed by the City, please return one fully executed original to my attention.

Should you have any questions or require any additional documents, please feel free to contact me.

Very truly yours,
HOLLAND & KNIGHT, LLP

Michelle DeRosa
For the Firm

Enclosures

cc: Pier Ballesteros, Project Manager, (w/enclosures)
Spire Development, Inc.
19921 Wyndmill Circle
Odessa, Fl. 33556

5588209_v1

City of Sanibel

800 Dunlop Road
Sanibel, Florida 33957-4096

www.mysanibel.com

AREA CODE - 239

ITY COUNCIL	472-4135
DMINISTRATION	472-3700
UILDING	472-4555
MERGENCY MANAGEMENT	472-3111
INANCE	472-9615
EGAL	472-4359
ATURAL RESOURCES	472-3700
ARKS & RECREATION	472-9075
LANNING	472-4136
O ICE	472-3111
UBLIC WORKS	472-6397

Recycled paper

September 17, 2008

Hans F. Leutenegger, Vice President
Verizon Wireless
180 Washington Valley Road
Bedminster, New Jersey 07921

Dear Mr. Leutenegger:

Please find enclosed your copy of the executed agreement between Verizon Wireless, T-Mobile and the City of Sanibel.

If you have any questions please call me at (239) 472-3700.

Cordially,

Pamela Smith, CMC
City Clerk

Enclosure

PBS/kc

Cc: Judie Zimomra, City Manager
Robert Duffy, Director of Planning

LESSOR Site I.D.: Sanibel Island Wulfert Road / 68907
LESSEE Site I.D: 6FM1152 Verizon Sanibel 68907

LEASE SUPPLEMENT

This Lease Supplement ("Supplement"), made this 5 day of September, 2008 between VERIZON WIRELESS PERSONAL COMMUNICATIONS LP d/b/a Verizon Wireless, a Delaware limited partnership, with its principal offices located at One Verizon Way, Mail Stop 4AW100, Basking Ridge, New Jersey 07920 with a federal identification number of 75-2681333, hereinafter designated LESSOR, and T-Mobile South LLC, a Delaware limited liability company, with offices located at 3407 W. Dr. Martin Luther King, Jr. Blvd., Tampa, FL 33607, hereinafter designated LESSEE.

1. This Supplement is a Supplement as referenced in that certain Master Lease Agreement between VOICESTREAM WIRELESS CORPORATION and CELLCO PARTNERSHIP dated April 24, 2001 ("Agreement"). All of the terms and conditions of the Agreement are incorporated hereby by reference and made a part hereof without the necessity of repeating or attaching the Agreement. In the event of a contradiction, modification or inconsistency between the terms of the Agreement and this Supplement, the terms of this Supplement shall govern. Capitalized terms used in this Supplement shall have the same meaning described for them in the Agreement unless otherwise indicated herein.

2. Site No. and Name (if applicable):

   Lessee: 6FM1152 Verizon Sanibel 68907

   Lessor: Sanibel Island Wulfert Road / 68907

3. Site Address: 2222 Wulfert Road, Sanibel, FL 33957

4. Site Latitude and Longitude: 26° 28' 29.01"N Latitude / 82° 09' 34"W Longitude

5. The term of this Supplement shall be as set forth in Paragraphs 4 and 5 of the Agreement.

6. The rental for the initial term pursuant to this Supplement shall be due at an annual rental of EIGHTEEN THOUSAND SIX HUNDRED AND 00/100 DOLLARS ($18,600.00) to be paid in equal monthly installments on the first day of the month, in advance, to LESSOR at the following address: P.O. Box 64498, Baltimore, MD 21264-4498 or to such other person, firm or place as the LESSOR may, from time to time, designate in writing at least thirty (30) days in advance of any rental payment date. **All Rent checks shall have LESSOR's site number clearly written on the face of the check.**

7. If the Property is subject to a prime lease, license or other such agreement affecting LESSOR's interest at the Property, a copy of such agreement is attached hereto as Attachment 3.

8. Lessor Contact for Emergency: 1-800-264-6620

9. Lessee Contact for Emergency: 1-800-416-4662

10. Special Provisions:

(a) Notwithstanding anything herein to the contrary, this Supplement is subject and subordinate to that certain Lease Agreement dated May 18, 2006, as amended (collectively, the "Prime Lease") between LESSOR and the City of Sanibel, a municipal corporation, existing under the laws of the State of Florida (the "City"). A copy of the Prime Lease is attached hereto as Attachment 3.

(b) Notwithstanding anything herein to the contrary, pursuant to Section 7(c) of the Prime Lease, in the event LESSOR subleases any portion of the Property, any rent paid by any sublessee(s) shall be divided between LESSOR and the City in the following manner: 50% to LESSOR and 50% to the City. In accordance with Section 7(c) of the Prime Lease, LESSEE shall remit the above mentioned percentages of each monthly rent installment due under this Supplement directly to LESSOR and the City. The fifty percent (50%) of each monthly installment which shall be paid to the City shall be paid to: City of Sanibel, c/o City Manager, 800 Dunlop Road, Sanibel, Florida 33957 or to such other person, firm or place as the City may, from time to time, designate in writing.

(c) In accordance with Section 7(c) of the Prime Lease, LESSOR and LESSEE shall enter into a Tri-Party Sublease Acknowledgement Agreement with the City to acknowledge the rent obligations of LESSEE and to confirm LESSEE'S obligation to remit the above-mentioned percentages of each monthly rental payment directly to LESSOR and the City.

(d) Prior to LESSOR's issuance of a notice to proceed permitting LESSEE to commence installation of its equipment on the Premises, LESSEE shall provide LESSOR with written evidence that this Supplement and LESSEE's proposed equipment and installations comply with all applicable requirements of the City of Sanibel Ordinance 99-07, codified in the Sanibel Land Development Code as Article XVII, Divisions 1 – 4 , Section 126-1511 through 126-1599, and the Approval Conditions, as more fully set forth in Section 10.B of the Prime Lease.

(e) LESSEE agrees that at all times LESSEE shall comply with the interference provisions set forth in Section 18.B of the Prime Lease.

IN WITNESS WHEREOF, the parties hereto have set their hands and affixed their respective seals the day and year first above written.

LESSEE: T-Mobile South LLC,
a Delaware limited liability company

BY: _____
PRINT NAME: Harlan Kickhoefer
TITLE: Director, Engineering and Operations
DATE: 8/25/08

WITNESS

WITNESS

LESSOR: Verizon Wireless Personal Communications LP d/b/a Verizon Wireless

BY: _____
PRINT NAME: Hans F. Leutenegger
TITLE: Area Vice President – Network, South Area
DATE: 9/5/2008

WITNESS

WITNESS

5389871_v5

ATTACHMENTS:
Attachment 1: Legal Description of the Property
Attachment 2: Plans and Specifications
Attachment 3: Prime Lease
Attachment 4: Owner's Consent
Attachment 5: Memorandum of Agreement

ATTACHMENT 1

to the Supplement dated September 5, 2008, by and between T-Mobile South LLC, as Lessee, and Verizon Wireless Personal Communications LP d/b/a Verizon Wireless, as Lessor.

LEGAL DESCRIPTION OF PROPERTY

DESCRIPTION OF PARENT TRACT:

DESCRIPTION OF OWNER'S PROPERTY

A PORTION OF GOVERNMENT LOT 7, SECTION 12, TOWNSHIP 46 SOUTH, RANGE 24 EAST, LEE COUNTY, FLORIDA, BEING MORE PARTICULARLY DESCRIBED AS FOLLOWS:

COMMENCE AT THE SOUTHWEST CORNER OF SAID GOVERNMENT LOT 7, THENCE [illegible] ALONG THE SOUTHERLY BOUNDARY OF SAID GOVERNMENT LOT 7 A DISTANCE OF [illegible] FEET TO THE POINT OF BEGINNING, SAID POINT LYING ON THE ARC OF A NON-TANGENT CIRCULAR CURVE CONCAVE TO THE SOUTHWEST (A RADIAL LINE THROUGH SAID POINT BEARS S48°28'03"W); THENCE NORTHWESTERLY ALONG THE ARC OF SAID CURVE HAVING FOR ITS ELEMENTS A RADIUS OF 440.00 FEET, A CENTRAL ANGLE OF 04°18'19", A CHORD DISTANCE OF 33.05 FEET, A CHORD BEARING OF N42°48'06"W, AN ARC DISTANCE OF 33.06 FEET; THENCE N40°01'47"E A DISTANCE OF 35.42 FEET; THENCE N44°[illegible]'13"W A DISTANCE OF 110.00 FEET; THENCE S40°01'47"W A DISTANCE OF 50.36 FEET TO A POINT ON THE ARC OF A NON-TANGENT CIRCULAR CURVE CONCAVE TO THE SOUTHWEST (A RADIAL LINE THROUGH SAID POINT BEARS S31°14'55"W); THENCE NORTHWESTERLY ALONG THE ARC OF SAID CURVE HAVING FOR ITS ELEMENTS A RADIUS OF 440.00 FEET, A CENTRAL ANGLE OF 36°14'05", A CHORD DISTANCE OF 244.20 FEET, A CHORD BEARING OF N[illegible]"W, AN ARC DISTANCE OF 247.54 FEET; THENCE N[illegible]'21"W A DISTANCE OF 101.[illegible] FEET; THENCE S84°[illegible]'33"W A DISTANCE OF 20.00 FEET; THENCE N[illegible]'27"W A DISTANCE OF [illegible] FEET; THENCE N67°23'56"E A DISTANCE OF 225.52 FEET; THENCE S41°[illegible]'E A DISTANCE OF 186.84 FEET; THENCE N75°35'57"E A DISTANCE OF 167.91 FEET; THENCE [illegible] A DISTANCE OF 110.34 FEET; THENCE S51°[illegible]'32"W A DISTANCE OF [illegible] FEET; THENCE S56°00'26"E A DISTANCE OF 210.40 FEET; THENCE [illegible] A DISTANCE OF 141.78 FEET; THENCE S49°10'26"E A DISTANCE OF 64.31 FEET; THENCE [illegible] A DISTANCE OF 158.[illegible] FEET TO A POINT ON THE SOUTHERLY BOUNDARY OF SAID GOVERNMENT LOT 7; THENCE WESTERLY ALONG THE SOUTHERLY BOUNDARY OF SAID GOVERNMENT LOT 7 A DISTANCE OF 396.84 FEET TO THE POINT OF BEGINNING.

SAID PARCEL CONTAINS 8.778 ACRES MORE OR LESS.

DESCRIPTION OF LESSOR'S PROPERTY:

A 50' x 50' portion of that certain real property described above, commonly known as 2222 Wulfert Road, City of Sanibel, County of Lee, State of Florida, being further described as follows:

[redacted]

LESSEE'S LEASED PROPERTY

A PORTION OF [redacted]

COMMENCE AT [redacted] OF 157.82 [redacted] POINT OF [redacted] EAST, A DISTANCE OF [redacted] FEET; [redacted] 85°48'07" WEST, A [redacted] FEET TO THE POINT OF [redacted].

CONTAINING 2,500.0 SQUARE FEET, MORE OR LESS.

[redacted]

A PORTION OF [redacted]

COMMENCE AT THE POINT OF [redacted] BOOK 2408, PAGE [redacted] OF THE OFFICIAL PUBLIC RECORDS OF LEE COUNTY, FLORIDA; PROCEED SOUTH [redacted] EAST ALONG THE WESTERLY LINE OF [redacted] OF 157.82 FEET; [redacted] POINT OF [redacted] WEST, A DISTANCE OF [redacted] 247.20 FEET; [redacted] 78°46'57" WEST, A DISTANCE OF [redacted] FEET TO A POINT ON [redacted] LANDS DESCRIBED IN OFFICIAL RECORDS BOOK [redacted] WESTERLY LINE OF TRACT "A", AS SHOWN IN PLAT BOOK [redacted] 06°16'27" WEST ALONG [redacted] 78°40'57" EAST, A DISTANCE OF [redacted] DISTANCE OF 46.06 FEET; [redacted] EAST, A DISTANCE OF [redacted] THENCE SOUTH [redacted] EAST, A DISTANCE OF [redacted] WEST, A DISTANCE OF [redacted] FEET TO THE POINT OF [redacted].

CONTAINING 11,712.0 SQUARE FEET, MORE OR LESS.

DESCRIPTION OF LESSEE'S PREMISES:

The premises leased by the Lessor to the Lessee hereunder is described as follows:

A 26' 8" by 15' area within Lessor's existing compound property and space on Lessor's tower at a Rad Center of 110', as both are described and depicted on Lessee's Site Plan and Tower Sketch attached hereto as Exhibit A to Attachment 1 and made a part hereof.

EXHIBIT A TO ATTACHMENT 1
LESSEE'S SITE PLAN AND TOWER SKETCH

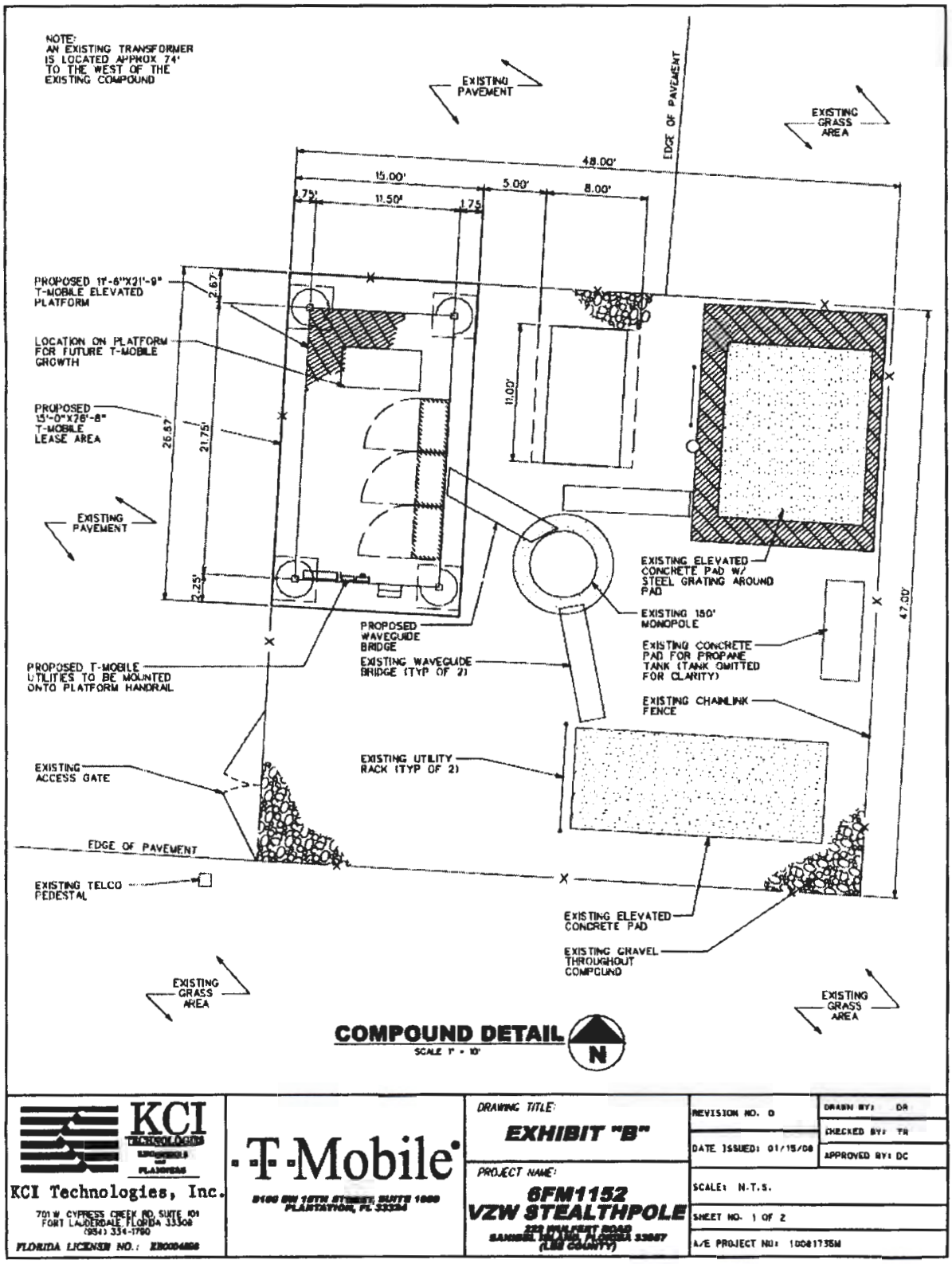

KCI TECHNOLOGIES ENGINEERS AND PLANNERS KCI Technologies, Inc. 701 W. CYPRESS CREEK RD. SUITE 101 FORT LAUDERDALE, FLORIDA 33309 (954) 334-1780 FLORIDA LICENSE NO.: [illegible]	T-Mobile 9100 SW 10TH STREET, SUITE 1000 PLANTATION, FL 33324	DRAWING TITLE: EXHIBIT "B"	REVISION NO. 0	DRAWN BY: DR
			DATE ISSUED: 01/15/08	CHECKED BY: TR APPROVED BY: DC
		PROJECT NAME: 6FM1152 VZW STEALTHPOLE 229 WALKER ROAD SANIBEL ISLAND, FLORIDA 33957 (LEE COUNTY)	SCALE: N.T.S.	
			SHEET NO. 1 OF 2	
			A/E PROJECT NO: 10081735M	

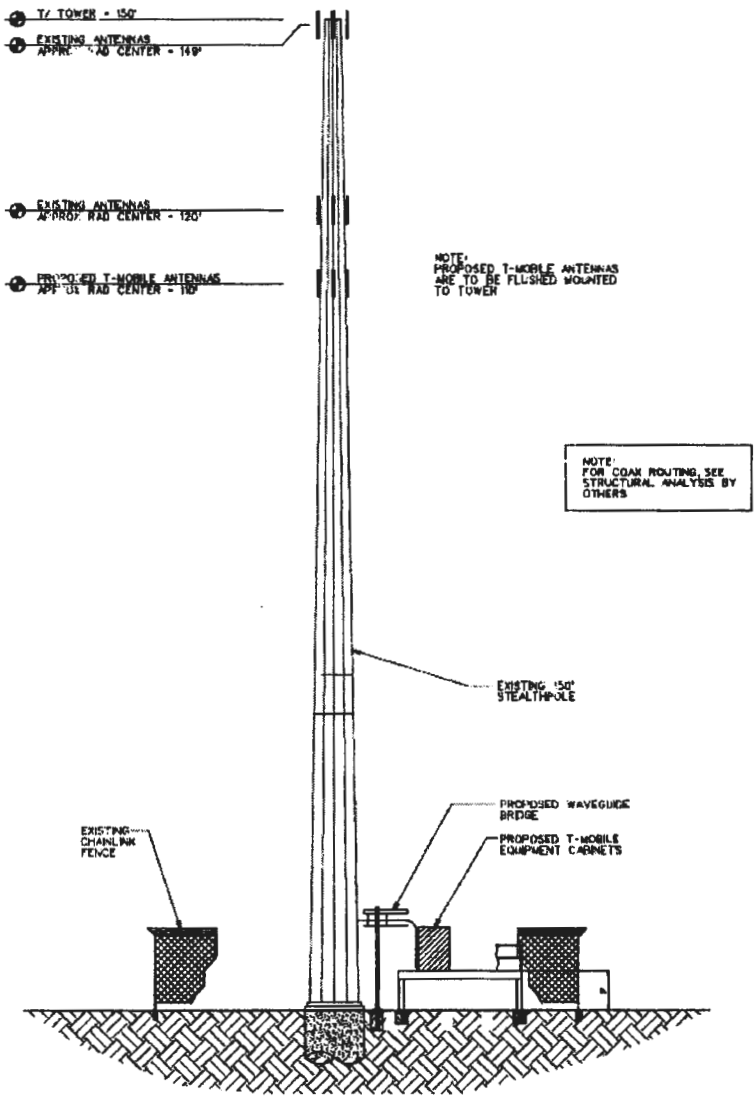

TOWER ELEVATION

NOT TO SCALE

NOTES:
1. ELEVATION SHOWN FOR REFERENCE ONLY. DO NOT USE FOR DIMENSIONING.

KCI TECHNOLOGIES ENGINEERS & PLANNERS KCI Technologies, Inc. 701 W. CYPRESS CREEK RD. SUITE 101 FORT LAUDERDALE, FLORIDA 33309 (954) 334-1790 FLORIDA LICENSE NO.: EB0004800	T-Mobile 8100 NW 10TH STREET, SUITE 1000 PLANTATION, FL 33324	DRAWING TITLE: **EXHIBIT "B"** PROJECT NAME: **6FM1152 VZW STEALTHPOLE** 223 WULFERT ROAD SANIBEL ISLAND, FLORIDA 33957 (LEE COUNTY)	REVISION NO. 0 DATE ISSUED: 01/15/08 SCALE: N.T.S. SHEET NO. 2 OF 2 A/E PROJECT NO: 10081135M	DRAWN BY: DR CHECKED BY: TR APPROVED BY: DC

ATTACHMENT 2

to the Supplement dated September 5, 2008, by and between T-Mobile South LLC, as Lessee, and Verizon Wireless Personal Communications LP d/b/a Verizon Wireless, as Lessor.

PLANS AND SPECIFICATIONS

(including description of the antenna location, and location of ground equipment adjacent to the Premises)

Proposed Equipment is defined below and Plans and specifications are attached hereto.

Number of Antennas:	Three (3)
Antenna Manufacturer and Type-Number:	RFS APX17DWV-17DVW-S-E-A20
Weight and Dimension of Antenna(s) (L x W x D):	(39.6 lbs) 75.8" x 13.3" x 3.15"
Number of Transmission Lines:	Twelve (12)
Transmission Line Mfr. and Type No.:	Eupen EUGK-S158
Diameter and Length of Transmission Line:	1 5/8" (130')
Location of Antenna(s) on Tower (Approved RAD Center):	110'
Direction of Radiation (Azimuth):	150, 290, 330
Dimensions of Ground Space subleased:	26' 8" X 15'
Frequencies/Max. Power Output:	PCS Rec: 1860 – 1865 MHz Trans: 1940 – 1945 MHz AWS Rec: 1710 – 1755 MHz Trans: 2110 – 2155 MHz

ATTACHMENT 3

to the Supplement dated September 5, 2008, by and between T-Mobile South LLC, as Lessee, and Verizon Wireless Personal Communications LP d/b/a Verizon Wireless, as Lessor.

PRIME LEASE

See attached
Lease Agreement

Notes:

1. The plans and specifications attached hereto are provided as Lease Exhibits only. Approved Final Construction drawings are required prior to commencement of construction. Actual "as built" drawings shall be attached and incorporated herein at the time of completion of construction.

2. This Attachment is to include any plans for routing lines, utility wires, etc. on or across the Property.

LEASE AGREEMENT
SITE: 68907 - Wulfert Road WWTP

THIS LEASE AGREEMENT ("Lease"), is made as of this 18 day of May, 2006, by and between CITY OF SANIBEL, ("Owner"), and VERIZON WIRELESS PERSONAL COMMUNICATIONS LP dba VERIZON WIRELESS, a Delaware limited partnership ("Lessee").

In consideration of the premises and of the mutual obligations and agreements in this Lease, the parties agree as follows:

1. **OWNER'S PROPERTY.** Owner represents and warrants that Owner is the title holder of that certain real property and the improvements thereon commonly known as 2222 Wulfert Road, City of Sanibel, County of Lee, State of Florida ("Owner's Property"), described on the attached Exhibit "A".

2. **LEASE OF PORTION OF OWNER'S PROPERTY; EASEMENTS ACROSS OWNER'S PROPERTY.**

A. Owner hereby leases and demises to Lessee a portion of Owner's Property comprised of approximately 2,500 (50 x 50) square feet of land in the location shown and described on Exhibit "B" ("Leased Property"). Owner also grants and conveys to Lessee nonexclusive easements across the Owner's Property connecting the Leased Property with the nearest public right-of-way and public utility easement (as applicable), for (i) unrestricted vehicular and pedestrian access to the Leased Property and parking on Owner's Property, as needed to install, operate and maintain Lessee's communications facilities, seven (7) days a week, twenty-four (24) hours a day and (ii) installation, location, operation and maintenance of cable runs and utilities including, without limitation, telephone and electric utilities, all as shown and described on Exhibit "B". In the event any public utility is unable to use the aforementioned easement, Owner hereby agrees to grant an additional easement either to Lessee or to the public utility at no cost to Lessee. The Leased Property including, without limitation, the access, cable run and utility easements, may be surveyed by a licensed surveyor, at Lessee's expense. Such survey and/or construction drawings, which shall not vary in any material respect from the easements and Leased Property shown in Exhibit "B", shall then replace Exhibit "B" and become a part hereof.

B. The City of Sanibel is leasing the Leased Property in its proprietary capacity, however, nothing in this Lease shall be construed to prohibit or in any way restrict the City of Sanibel, in its capacity as a local government, from enforcing any and all applicable laws within the City of Sanibel relating to the maintenance, construction and use of Lessee's communications tower. Further, Lessee's compliance with all City of Sanibel conditions of approval set forth in the development permit for Lessee's communication tower (hereinafter referred to as the "Approval Conditions") shall be considered conditions and covenants by Lessee of this Lease, incorporated herein by reference and enforceable under the terms of this Lease, as well. If after issuance of the development permit, Lessee is not satisfied (in Lessee's sole discretion) with the Approval Conditions, then Lessee may elect to terminate this Lease at any time prior to beginning physical construction of the Tower. Once Lessee has begun physical

construction of the Tower, the foregoing right of termination shall be deemed waived.

3. **USE OF THE LEASED PROPERTY.** Lessee and its sublessees and/or licensees may use the Leased Property for the installation, removal, securing, repair, replacement, maintenance and operation of a monopole communications tower (the "Tower") not to exceed One Hundred Forty-Nine (149') feet in height, as measured from the top of the Tower structure and not appurtenances thereon, and associated communications facilities which may include personal communications service, cellular, paging, radio, cable, and other communications facilities comprised of, without limitation, antenna arrays, dishes, cables, wires, equipment shelters, buildings, electronics equipment, generators, fuel tank(s), fencing, utility transformers and lines, cable runs, grounding systems, accessories, all as may be modified, added to or substituted from time to time, to the extent permitted in the applicable City of Sanibel ordinances. The Tower shall be designed and constructed in accordance with City of Sanibel Ordinance No. 99-07, codified in the Sanibel Land Development Code as Article XVII, Divisions 1 – 4, Sections 126-1511 through 126-1599, and the Approval Conditions. The final design of the Tower shall be subject to Owner's review and approval (which approval shall not be unreasonably withheld, delayed or conditioned). Further, during the Feasibility Period, as hereinafter defined, and throughout the Lease term, as may be extended, Lessee and its sublessees and/or licensees shall have the right to conduct Feasibility Tests on the Leased Property and Owner's Property, at Lessee's (or sublessee's or licensee's) sole expense.

4. **RESERVED TOWER SPACE.**

A. Owner, subject to the terms and conditions herein, shall have a non-revocable, exclusive license for the use of that portion of the Tower extending from one hundred thirty (130) feet to one hundred forty (140) feet (the "Reserved Tower Space") for the purpose of installing and operating its emergency communications equipment. Lessee shall have the right to substitute an equal amount of space at a location acceptable to Owner (in Owner's sole discretion) to the extent Owner has not exercised its right to use the Reserved Tower Space, and Lessee needs the Reserved Tower Space for its own operations. The substituted tower space shall be considered the Reserved Tower Space from that point forward. Under no circumstances shall Owner license or sublease any portion of the Reserved Tower Space to third parties, except a sublease may be granted by Owner to another government entity for the sole purpose of operating Owner's emergency, governmental and/or public safety communications as could otherwise be conducted by Owner hereunder. Additionally, Owner may sublease a portion of the Reserved Tower Space to a non-governmental entity provided such entity is using equipment on the Tower solely for the purpose of operating Owner's emergency, governmental and/or public safety communications as could otherwise be conducted by Owner hereunder and for no commercial purposes whatsoever. No part of the Leased Property shall be utilized by

Owner for the placement of any necessary ground equipment without prior written consent of Lessee (which consent can be granted or denied in Lessee's sole discretion), and Owner shall use its contiguous property for the placement of any necessary equipment.

B. Conditions for Use by Owner of Tower. Owner's equipment shall have Lessee's prior written approval, such approval not to be unreasonably withheld, delayed or conditioned, and shall be in accordance with the standards and requirements of Lessee, and shall be done under the Lessee's supervision and shall be subject to Lessee's final written approval, such approval not to be unreasonably withheld, delayed or conditioned. Owner will be responsible for the cost of Owner's initial equipment ("Owner's Initial Equipment") and the installation of that approved Owner's Initial Equipment. The supervision, approval and other activities of Lessee under this Paragraph, however, shall not constitute the waiver of any term or condition of this Lease. Scheduling of any and all work on the Leased Property and/or Tower will be coordinated with Lessee. Any future maintenance or access necessitating access by Owner to the Leased Property and/or Tower must be coordinated with Lessee within a reasonable time not less than seventy-two (72) hours prior to work being done, except that such coordination period shall be reduced accordingly based on emergency circumstances. All of Owner's equipment mounted on the Tower must be attached securely to the Tower with approved mounts, hangers, and clamps as directed by Lessee. Failure to comply with the terms and conditions of this Paragraph shall be cause for immediate notification of an Event of Default by Owner, which shall occur pursuant to the provisions of Section 12 of this Lease. Any inspection or approval given or done by Lessee pursuant to this Lease is solely for its own benefit. Lessee shall have no liability or responsibility to the Owner or any third party as a result of any inspection or approval given by Lessee and Owner should not rely upon the same other than for the specific purposes set forth herein.

C. Approved Equipment. Any such approved equipment shall be set forth on Exhibit "D" attached hereto and incorporated herein. Owner shall be required to submit an application to Lessee on a form to be provided by Lessee. Grounds for denying approval shall include, but shall not be limited to, the potential for overstressing the Tower taking into account the present loading on the Tower and the anticipated additional loading by Lessee on the Tower. Lessee shall make its analysis of Owner's application based on best engineering and management practices, but Owner's application shall not be unreasonably denied, delayed or conditioned. Further, in the event that Owner's application is denied by Lessee, there shall be a presumption that any further equipment attached to the Tower by any party, including Lessee, will overstress the Tower and no further equipment shall be added by any party, including Lessee, until Lessee establishes that such additional equipment can be appropriately added without overstressing the Tower when Owner's equipment was denied. If Lessee approves of Owner's application but conditions its approval on Owner making certain Tower modifications in

order to avoid overstressing of the Tower, and Owner refuses to make such modifications, then Lessee or another user of the Tower shall be permitted to add equipment to the Tower if (i) the conditions of the immediately preceding sentence are satisfied or (ii) overstressing of the Tower would result from the additional equipment and Lessee or such other user is willing to make the necessary Tower modifications to avoid overstressing of the Tower. To the extent Owner's approved equipment has not been decided upon between the parties prior to the execution of this Lease, at such time as Owner's application is submitted and approved by Lessee, and signed by both parties, it will be attached as Exhibit "D" to all original copies of this Lease.

D. Maintenance of Owner's Equipment. All of Owner's equipment shall be purchased and installed at the expense of Owner, and all of Owner's equipment, including, but not limited to, Owner's Initial Equipment, must be kept and maintained by Owner at all times, at its expense, in a good state of repair and maintenance and in compliance with all applicable Rules and Regulations of the Federal Communications Commission, Federal Aviation Agency and all applicable codes and regulations of the municipality, county and state concerned. Under this Lease, Lessee assumes no responsibility for the licensing, operation, and/or maintenance of Owner's radio equipment. To the extent permitted by law, Owner shall defend, indemnify and save Lessee harmless from any claims or suits arising by reason of Owner's failure to so keep and maintain its equipment or to comply with such laws, rules or regulations.

E. Approval of Contractors. It is further understood and agreed Lessee must approve of, in writing, all contractors and personnel chosen by Owner to install, maintain and operate the Owner's equipment and that Owner's maintenance and operation of its equipment will in no way damage or interfere with the Lessee's use of the Leased Property, Tower, antennae and appurtenances. Lessee's approval of such contractors and personnel shall not be unreasonably withheld, delayed or conditioned.

F. Owner shall have the option to utilize the Reserved Tower Space during the initial five (5) year term of this Lease. To the extent Owner has not filed an application with Lessee to utilize the Reserved Tower Space prior to the expiration of the initial term of this Lease, Owner shall lose its rights in and to the Reserved Tower Space, and Lessee shall be free to use the same for its own purposes or to sublease or license the same to third parties.

5. **FEASIBILITY PERIOD.** The period of time commencing on the date that this Lease has been executed by both Owner and Lessee ("Execution Date") until the earlier of (i) the date that Lessee commences installation of Lessee's communications facilities on the Leased Property or (ii) sixty (60) days from the Execution Date, shall be referred to herein as the "Feasibility Period". Upon two (2) business days notice to Owner, delivered in accordance with Paragraph 22 of this Lease, Lessee, its agents and contractors shall have the right to enter

upon the Owner's Property between 8:00 A.M. and 5:00 P.M._during the Feasibility Period to conduct tests and studies (collectively, "Feasibility Tests"), at Lessee's expense, to determine the suitability of the Leased Property for Lessee's communications facilities and intended use. The Feasibility Tests may include, without limitation, surveys, soils tests, environmental assessments and radio wave propagation measurements. Lessee shall restore the Owner's Property to its original condition, reasonable wear and tear excepted, and at its sole expense upon completion of such Feasibility Tests. In consideration of Owner granting Lessee the right to conduct Feasibility Tests during the Feasibility Period, Lessee agrees to pay Owner the sum of One Hundred Dollars ($100.00) within thirty (30) days of the Execution Date. If Lessee determines in Lessee's sole and absolute discretion, that the Leased Property is not suitable for Lessee's communications facilities or intended use after conducting any of such Feasibility Tests, Lessee shall have the right to terminate this Lease in accordance with the Provisions of Paragraph 9, prior to the end of the Feasibility Period. From and after the Execution Date, the provisions of this Lease shall be in effect except that the Lease term and obligation to pay rent shall not commence until the Commencement Date. Except as otherwise provided herein, the "Commencement Date" shall be defined, as the date that is the first day of the month after the date Lessee begins construction of the Tower. No construction or installation shall occur (other than Feasibility Tests) prior to the date Lessee is granted a development permit and building permit by the City of Sanibel. To the extent that any suit, appeal or other proceeding instituted by third parties against Owner and/or Lessee delays the construction of the Tower or Lessee's ability to operate its equipment from the Tower once constructed, notwithstanding the obtaining of a building permit by Lessee, the Commencement Date shall not occur until the resolution of any such suit, appeal or proceeding, with finality, such date as shall be agreed upon by the parties for purposes of certainty.

6. **TERM; AND EXTENSIONS.**

A. Initial Term. This Lease shall be for an initial term of five (5) years and zero (0) months beginning on the Commencement Date.

B. Extensions. This Lease shall automatically be extended on the same terms and conditions (other than the annual rent which shall escalate in accordance with the provisions of Paragraph 7) for three (3) additional, successive five (5) year extension periods unless Lessee gives Owner written notice of Lessee's intention not to extend this Lease at least one hundred eighty (180) days prior to the end of the then-current term.

7. **RENT.**

A. Initial Rent. Annual rent shall be paid in equal monthly installments in advance beginning on the Commencement Date and on first (1st) day of each month thereafter to Owner at the address set forth for notices in Paragraph 22 or to such other address as Owner may advise Lessee, in writing, pursuant to the notice provisions of Paragraph 22. The annual rent shall be [redacted]

[redacted] The initial monthly rent payment shall be paid on or before the Commencement Date.

B. Escalations. Beginning on the first anniversary of the Commencement Date, and annually thereafter, the annual rent shall be an amount equal to the annual rent in effect for the immediately preceding one (1) year period, increased by three percent (3%).

C. Additional Rent.

(i) In the event Lessee subleases any portion of the Leased Property, any rental paid by any sublessee(s) shall be divided between Owner and Lessee in the following manner: 50% to Owner and 50% to Lessee. Lessee agrees that any such sublessee(s) shall be instructed to pay the foregoing percentage amounts directly to Owner and Lessee. Lessee shall not be responsible to Owner for the collection or payment of rents by the sublessee(s) to Owner, and Lessee shall have no liability to Owner in the event sublessee(s) fail to make such payment(s). Lessee will provide Owner with a tri-party agreement to be executed by Lessee, sublessee(s) and Owner to confirm the direct payment obligation from the sublessee(s) to Owner, to set forth Owner's remedies in the event of non-payment or late payment by sub-lessee and to indicate Owner has been notified of the sublease.

(ii) It is understood and agreed by the parties hereto that the foregoing rental percentage amounts shall only apply if Lessee is able to accommodate all of the ground space needs of such sublessee(s) facilities within the Leased Property. If Lessee is unable to accommodate all of the ground space needs of any such sublessee(s) within the Leased Property, then such sublessee(s) will be required to obtain the necessary ground space from Owner and will have to enter into a separate agreement with Owner for the necessary ground space within Owner's Property that sublessee(s) requires to locate its facilities. In this event, Lessee shall receive 100% of the rental or fees paid by such sublessee(s) to Lessee for the tower space being leased or licensed from Lessee, and Owner shall receive 100% of the rental or fees paid by such sublessee(s) to Owner for the ground space being leased or licensed from Owner.

8. **APPROVALS; UTILITIES.** Lessee, at Lessee's expense, shall be responsible for (i) obtaining all licenses, certificates, permits and other approvals required by any federal, state or local governmental or quasi-governmental authority for Lessee and its sublessees and/or licensees' use of the Leased Property and/or operation of their respective communications facilities thereon (collectively, "Approvals") and (ii) installing new utilities or upgrading existing utilities on the Leased Property and across the Owner's Property necessary for the operation of its communications facilities and paying for all utilities consumed by Lessee and its sublessees and/or licensees at the Leased Property. Lessee and its sublessees and/or licensees shall either separately meter or sub-meter all utilities consumed by Lessee and its sublessees and/or licensees. Owner agrees to cooperate with Lessee and its sublessees and/or licensees in obtaining

and/or maintaining, at no expense to Owner, such Approvals, utility services and easements reasonably required for Lessee's and its sublessees' and/or licensees' use of the Leased Property and/or operation of their respective communications facilities thereon, including, without limitation, the execution of all documents reasonably required for such Approvals, utility services and easements, provided such documents are not inconsistent with the terms of this Lease.

9. **TERMINATION.** Lessee shall have the right to terminate this Lease at any time without further liability hereunder if Lessee determines that any one (1) or more of the following events is occurring or has occurred:

A. Approvals and/or Easement Not Obtainable. All Approvals and/or easements for Lessee's intended use of, or operation or construction of its communications facilities on, the Leased Property cannot be obtained by the Commencement Date; or

B. Approvals and/or Easements Cancelled. Any Approval and/or easement for Lessee's intended use of, or operation or construction of its communications facilities on, the Leased Property is canceled, withdrawn, terminated or denied or expires or lapses; or

C. Ownership; Authority. Owner does not have legal or sufficient ownership of the Leased Property or the authority to enter into this Lease; or

D. Hazardous Material. Within thirty (30) days of learning that the Owner's Property contains a Hazardous Material, as defined in Paragraph 14, not introduced to the Property by Lessee or one of its sublessees or licensees and not discovered or discoverable during the performance of a Phase I environmental study of the Property during the Feasibility Period; or

E. Title. The status of the title to the Leased Property is unacceptable, in Lessee's sole discretion, prior to the Commencement Date; or

F. Feasibility. Based on the results of any Feasibility Tests conducted during the Feasibility Period, the Leased Property is not suitable for Lessee's intended use or the operation or construction of its communications facilities, in Lessee's sole and absolute discretion.

G. Technical Compatibility. Lessee determines that the Leased Property is no longer technically compatible for its intended use.

H. Annual Termination. Upon each annual anniversary of the Commencement Date, provided Lessee has notified Lessor in writing pursuant to Section 22 of this Lease of Lessee's intent to terminate at least 120 days prior to such termination.

I. Loss of Approvals. In the event any Approval necessary for Lessee's continued operations at the Leased Property is canceled through no fault of Lessee.

J. Other. In the event construction of the Tower or Lessee's

ability to operate its equipment from the Tower once constructed is delayed due to any suit, appeal or other proceeding instituted by third parties against Owner and/or Lessee, and Lessee determines that resolution of any such suit, appeal or proceeding, with finality, will not occur in a timely manner.

Under any of the above circumstances, Lessee may terminate this Lease by giving Owner written notice thereof delivered in accordance with the provisions of Paragraph 22. If Lessee elects to terminate this Lease pursuant to this Paragraph 9, this Lease shall terminate as of the date set forth in the notice of termination sent by Lessee to Owner, which date shall not be more than one hundred twenty (120) days from the date of such notice. Within thirty (30) days after such termination, Owner shall pay to Lessee any prepaid annual rent that has not accrued as of the date of such termination. Owner's obligation to pay the foregoing rental amount shall survive termination of this Lease.

10. **ASSIGNMENT; SUBLEASE; LICENSE.**

A. This Lease may be sold, assigned or transferred by Lessee without any approval or consent of Owner to Lessee's principal(s), affiliates, or any subsidiary of Lessee, its principal(s) or affiliates; to any entity which acquires all or substantially all of Lessee's assets in the market defined by the Federal Communications Commission in which the Owner's Property is located by reason of a merger, acquisition or other business reorganization; or to any entity which acquires or receives an interest in the majority of communication towers of Lessee in the market defined by the Federal Communications Commission in which the Owner's Property is located. As to other parties, this Lease may not be sold, assigned or transferred without the written consent of Owner, which such consent will not be unreasonably withheld, delayed or conditioned. No such assignment to third parties shall relieve Lessee of its obligations hereunder for the remaining portion of the then-current lease term. Further, any such sale, assignment or transfer, even made with the written consent of Owner, shall be made specifically subject to all applicable City of Sanibel Ordinances, Resolutions and the Approval Conditions.

B. Notwithstanding the foregoing, Lessee may sublease any portion of the Leased Property at its sole discretion, upon notice to Owner, provided that such sublease complies with all applicable requirements of City of Sanibel Ordinance 99-07, codified in the Sanibel Land Development Code as Article XVII, Divisions 1 – 4, Sections 126-1511 through 126-1599, and the Approval Conditions. Any sublease that is entered into by Lessee shall be subject to the provisions of this Lease and shall be binding upon the successors, assigns, heirs and legal representatives of the respective parties hereto. To the extent that any renewal periods under this Lease are included in the term of any such sublease, the sublease shall be conditioned on the extension of this Lease, and shall automatically terminate upon the non-renewal, expiration or early termination of this Lease. The term "sublease", "sublet", "sublessee" and any other similar term shall apply to any situation

by which Lessee allows a third party use of the Leased Property for co-location, whether it be by formal sublease, license or other agreement. All rights and responsibilities of Lessee set forth in this Lease shall be enjoyed by and binding on any sublessee. Such sublease shall not act to relieve Lessee of its obligations hereunder.

C. Material to Owner's decision to enter into this Lease is Lessee's representation and warranty that it will comply with all applicable provisions of City Ordinance 99-07, and the Approval Conditions including, but not limited to, the obligation to allow for co-location on the Tower constructed on the Leased Property at reasonable rates and subject to the terms hereof. Provided that Lessee is not in violation of these or any other requirements of the Ordinance, Lessee shall have the sole right to determine whether it will allow any specific sublessee, other than Owner, to co-locate on the Tower.

11. INDEMNIFICATION AND INSURANCE.

A. Indemnification by Lessee. Lessee hereby agrees to indemnify and hold Owner and Owner's officials, partners, affiliates, agents and employees harmless from and against any and all liabilities, claims, demands, action, losses, damages, orders, penalties, costs and/or expenses including, without limitation, reasonable attorneys fees and costs resulting from: (i) personal injury or property damage arising out of the acts or omissions of Lessee, its agents and/or employees in any way relating to the Leased Property; (ii) Lessee's breach of any covenants or provisions of this Lease to be observed or performed by Lessee and failure to cure such breach after the expiration of all applicable cure periods; (iii) any damages or causes of action arising out of or relating to Lessee's, or any of its sublessees' or licensees' use of the Leased Property or Owner's Property under this Lease; and/or (iv) personal injury or property damage (subject to the waiver of subrogation set forth in Paragraph 11.D. below) arising out of a failure or collapse, for any reason, of the Tower or attached facilities (except any of Owner's equipment) to be constructed on the Leased Property. Notwithstanding any of the foregoing, Lessee shall have no obligation to indemnify and hold Owner and Owner's officials, partners, affiliates, agents and employees harmless from and against any liabilities, claims, demands, actions, losses, damages, orders, penalties, costs and/or expenses resulting solely from the acts or omissions of Owner, its officials, partners, affiliates, agents or employees. The obligations of Lessee under this Paragraph 11.A shall survive termination or expiration of this Lease.

B. Lessee's Insurance. Lessee shall carry comprehensive general liability insurance with limits of liability thereunder of not less than $2.5 million combined single limit for bodily injury and/or property damage, including coverage for contractual liability (subject to standard policy exclusions). Such insurance shall name Owner, as an additional insured with respect to the Leased Property and related easements, shall be issued by an insurance company authorized to do business in the state in which the Leased Property is located and shall provide thirty (30) days prior written notice to Owner of any cancellation of

such policy. On or before the Commencement Date, Lessee shall deliver to Owner a certificate evidencing that such insurance is in effect, and, thereafter, within ten (10) business days of Owner's request for any such certificate. Any insurance required to be provided by Lessee under this Paragraph 11.B. may be provided by a blanket insurance policy covering the Leased Property and easements and other properties of Lessee, provided such blanket insurance policy complies with all of the other requirements of this Lease with respect to the type and amount of insurance required.

C. Owner's Insurance. To the extent permitted by law, Owner shall carry comprehensive general liability insurance with limits of liability thereunder of not less than $2.5 million combined single limit for bodily injury and/or property damage, including coverage for contractual liability (subject to standard policy exclusions), covering Owner's Property. Such insurance shall be issued by an insurance company authorized to do business in the state in which the Owner's Property is located. On or before the Commencement Date, Owner shall deliver to Lessee a certificate evidencing that such insurance is in effect, and, thereafter, within ten (10) business days of Lessee's request for any such certificate. Any insurance required to be provided by Owner under this Paragraph 11.C. may be provided by a blanket insurance policy covering the Owner's Property and other properties of Owner, provided such blanket insurance policy complies with all of the other requirements of this Lease with respect to the type and amount of insurance required.

12. EVENT OF DEFAULT.

A. Event of Default by Lessee. The occurrence of any one (1) or more of the following events shall constitute an "Event of Default" hereunder by Lessee:

(i) The failure by Lessee to make any payment of rent or any other payment required to be made by Lessee hereunder, as and when due, where such failure continues for a period of fifteen (15) days after Lessee's receipt of written notice thereof from Owner.

(ii) The failure by Lessee to observe or perform any of the covenants or provisions of this Lease to be observed or performed by Lessee, other than as specified in Paragraph 12.A.(i), where such failure continues for a period of thirty (30) days after Lessee's receipt of written notice thereof from Owner; provided, however, that it shall not be an Event of Default by Lessee if Lessee commences to cure such failure within such thirty (30) day period and thereafter diligently and expeditiously prosecutes such cure to completion.

B. Event of Default by Owner. The occurrence of any one (1) or more of the following events shall constitute an Event of Default hereunder by Owner:

(i) The failure by Owner to observe or perform any of the covenants or provisions of this Lease to be observed or performed by Owner, where such failure continues for a

period of thirty (30) days after written notice thereof is given to Owner, provided, however, that it shall not be an Event of Default by Owner if Owner commences to cure such failure within such thirty (30) day period and thereafter diligently and expeditiously prosecutes such cure to completion, provided, further, Owner shall not be granted more than thirty (30) days to cure a monetary breach of this Lease.

(ii) If Owner defaults or an event of default occurs under any mortgage, deed of trust, any lease under which Owner holds title to any portion of Owner's Property, or any other similar encumbrance and such default or event of default adversely affects Lessee's and/or its sublessees' and/or licensees' use of the Lease Property or the operation of Lessee's and/or its sublessees' and/or licensees' communications facilities on the Leased Property.

(iii) A voluntary or involuntary petition in bankruptcy is filed by or against Owner, or Owner becomes insolvent (meaning, unable to pay his, her or its debts as they become due), or Owner makes a transfer or conveyance in constructive or actual fraud of creditors or makes a general arrangement or general assignment for the benefit of creditors.

C. Remedies Upon Default. If an Event of Default occurs by Lessee or Owner, the non-defaulting party shall have all remedies available to it in law or equity, including without limitation the right to terminate this Lease. In the event Lessee terminates this Lease due to an Event of Default by Owner, then within thirty (30) days after such termination, Owner shall pay to Lessee any prepaid annual rent that has not accrued as of the date of such termination. Owner's obligation to pay the foregoing rental amount shall survive termination of this Lease.

13. **SALE OR TRANSFER BY OWNER.** Should Owner, at any time during the term of this Lease, as may be extended, sell, lease, transfer or otherwise convey all or any portion of Owner's Property to any transferee other than Lessee, such sale, lease, transfer or other conveyance shall be subject to this Lease and all of Lessee's rights hereunder.

14. **HAZARDOUS SUBSTANCES.**

A. Lessee shall undertake an environmental study, at Lessee's sole expense, during the Feasibility Period, to the extent necessary to satisfy itself with respect to the presence of any Hazardous Substances on or near the Leased Property. Lessee hereby agrees that it will not use, store or dispose of any Hazardous Substances at or near the Leased Property in violation of any applicable federal, state or local laws or regulations. For purpose of this provision, "Hazardous Substances" include any substance identified as hazardous, toxic, or dangerous in any applicable federal, state, or local law or regulation, including petroleum products. Lessee agrees to indemnify and hold Owner harmless from any cost, liability or expense (including without limitation, cost of cleanup or fines, reasonable attorney fees, and court or administrative proceedings) incurred on account of contamination of the Owner's Property or Leased Property by any

Hazardous Substance used, stored or disposed of by Lessee. Lessee's obligations under this Paragraph 14 shall survive the termination, for any reason, or expiration of this Lease.

B. Owner represents and warrants that it has no knowledge of any Hazardous Substances on the Owner's Property, except those substances and materials which are used, regularly or intermittently, as part of Owner's municipal sewage treatment plant operation located on Owner's Property, which is acknowledged by Lessee to be the primary and ongoing use for Owner's_Property. Owner shall be responsible for all obligations of compliance with any and all environmental and industrial hygiene laws, including any regulations, guidelines, standards, or policies of any governmental authorities regulating or imposing standards of liability or standards of conduct with regard to any environmental or industrial hygiene conditions or concerns as may now or at any time hereafter be in effect, that are or were in any way related to activity now conducted in, on, or in any way related to the Owner's Property, unless such conditions or concerns are caused by the activities of Lessee. To the extent permitted by law, Owner shall hold Lessee harmless and indemnify Lessee from and assume all duties, responsibility and liability at Owner's sole cost and expense, for all duties, responsibilities, and liability (for payment of penalties, sanctions, forfeitures, losses, costs, or damages) and for responding to any action, notice, claim, order, summons, citation, directive, litigation, investigation or proceeding which is in any way related to: (i) Owner's failure to comply with any environmental or industrial hygiene law, including without limitation any regulations, guidelines, standards, or policies of any governmental authorities regulating or imposing standards of liability or standards of conduct with regard to any environmental or industrial hygiene concerns or conditions as may now or at any time hereafter be in effect, unless such compliance results from conditions caused by Lessee; and (ii) any environmental or industrial hygiene conditions arising out of or in any way related to the condition of the Owner's Property or activities conducted thereon, unless such environmental conditions are caused by Lessee. Owner's obligations under this Paragraph 14 shall survive the termination, for any reason, or expiration of this Lease.

15. **CONDEMNATION.**

A. Entire Condemnation. In the event the whole of Owner's Property, including, without limitation, the Leased Property, shall be permanently taken or condemned for public purposes, or sold to a condemning authority under threat of condemnation to prevent taking, this Lease shall automatically terminate as of the day of the taking, condemnation or sale.

B. Partial Condemnation. In the event any portion of the Leased Property shall be permanently taken or condemned for public purposes, or sold to a condemning authority under threat of condemnation to prevent taking, and as a result of such taking, condemnation or sale, Lessee determines, in its sole discretion, that it can not continue operation of its communications facilities, then Owner agrees that

Lessee may use and/or construct upon an alternate portion of Owner's Property which is equally suitable for Lessee's purposes, provided such alternate portion is available and will not interfere with Owner's other use of Owner's Property at that time. The location of the alternate portion of Owner's Property to which Lessee may relocate shall be mutually determined by Owner and Lessee. If an alternate portion of Owner's Property is available and acceptable to both Owner and Lessee, then Owner and Lessee shall enter into an amendment to this Lease designating such alternate portion of Owner's Property as the Leased Property. In the event no alternate portion of the Owner's Property is agreeable to both Lessee and Owner, this Lease shall automatically terminate as of the day of the taking, condemnation or sale.

C. Notwithstanding anything contained in Paragraphs 15.A. or 15.B. to the contrary, in the event of any taking, condemnation or sale in lieu of a taking of the Owner's Property, Lessee may terminate this Lease upon fifteen (15) days written notice to Owner if such condemnation may reasonably be expected to disrupt Lessee's operations at the Leased Property for more than forty-five (45) days.

D. Condemnation Award. Owner shall receive the entire condemnation award for the land and such other improvements as are owned by Owner, and Lessee hereby expressly assigns to Owner any and all right, title and interest of Lessee now or hereafter arising in and to any such award. Notwithstanding the foregoing, Lessee shall have the right to recover from such authority, but not from Owner, any compensation as may be awarded to Lessee on account of Lessee's leasehold interest, moving and relocation expenses, interruption of business and depreciation to and removal of the personal property and fixtures of Lessee.

D. Rebate of Rent. If this Lease is terminated pursuant to the provisions of Paragraphs 15.A., 15.B., or 15.C., Owner shall, within thirty (30) days after the termination date, reimburse to Lessee any prepaid rent that has not accrued as of the termination date, and all rights and obligations of Owner and Lessee arising after the date of termination shall terminate, except as specifically set forth in this Lease. The Owner's obligation under this subparagraph shall survive termination or expiration of this Lease.

16. LIENS.

A. Mechanics' Liens. Lessee shall keep the Leased Property free from any liens arising out of any work performed, materials furnished, or obligations incurred by or for Lessee, its sublessees or licensees. Lessee shall, within twenty (20) days of Lessee's receipt of written notice from Owner of the imposition of such lien, (i) cause the same to be released of record by payment or (ii) deliver to Owner a bond in the amount of one hundred ten percent (110%) of the amount of the lien. Upon delivery of the bond to Owner, Lessee may contest the validity of the lien. Once the lien is released of record, any bond provided by Lessee to Owner shall be released and returned to Lessee. No work which Owner permits

Lessee to perform on the Lease Property shall be deemed to be for the use of benefit of Owner so that no mechanics or other lien shall be allowed against the estate of Owner by reason of its consent to such work. Owner shall have the right to post notices that it is not responsible for payment for any such work.

17. **TAXES; MAINTENANCE.**

A. Taxes. Lessee shall be responsible for paying all personal property taxes assessed directly upon Lessee's communications facilities, and requiring that its sublessees and licensee's pay all personal property taxes assessed directly upon its sublessee's or licensee's communications facilities, located on the Leased Property. Lessee also shall be responsible for paying to Owner, as additional rent, all applicable real estate taxes assessed directly upon the Leased Property (including any portion of such taxes attributable to Lessee's communications facilities) within thirty (30) days of Lessee's receipt from Owner of a tax bill evidencing such taxes, and Owner shall pay such taxes to the appropriate governmental authorities upon receipt of such funds from Lessee. Lessee shall pay to Owner, all applicable sales taxes levied against the annual rent paid by Lessee to Owner, and Owner shall pay such sales taxes to, and file all required forms with, the appropriate governmental authorities upon receipt of such sales taxes levied against Owner's income derived from the Leased Property. Lessee shall have the right, at its sole option and at its sole cost and expense, to appeal, challenge or seek modification of any real estate tax assessment or billing for which Lessee is wholly or partly responsible for payment under this Lease. Owner shall reasonably cooperate with Lessee in filing, prosecuting and perfecting any appeal or challenge to real estate taxes as set forth in the preceding sentence, including but not limited to, executing any consent to appeal or other similar document.

B. Maintenance. Lessee, at Lessee's expense, shall be responsible for maintaining, repairing and replacing Lessee's communications facilities located on the Leased Property and shall cause its sublessees and/or licensees to maintain, repair and replace their respective communications facilities located on the Leased Property. All maintenance, repairs, and replacement required pursuant to this paragraph 17.B. shall be performed in good and workmanlike manner and shall be in compliance with all Governmental Laws, as defined in Paragraph 23.C. Owner will maintain the Owner's Property, excluding the Leased Property, in good condition, reasonable wear and tear excepted.

18. **QUIET ENJOYMENT AND NON-INTERFERENCE.**

A. Quiet Enjoyment. Owner represents, warrants and agrees that Lessee, upon paying the rent and performing the covenants and provisions in this Lease to be observed or performed by Lessee shall peaceably and quietly have and enjoy the Leased Property.

B. Interference. A material inducement to Owner's entering into this Lease is the right to place Owner's

emergency communications equipment (identified in Paragraph 4) on the Tower. Moreover, Lessee hereby acknowledges that Owner's emergency communications equipment on the Tower may be required during times of emergency. Accordingly, Lessee hereby agrees that it has not, nor shall it enter into any sublease or license to allow, or construct or permit the construction or placement of, any facility that would cause measurable interference to the operation of Owner's emergency communications equipment on the Tower. If any such interference occurs, Lessee agrees at its sole cost and expense, to eliminate or cause the elimination of such interference with the operation of Owner's emergency communications equipment on the Tower, including the signal strength of Owner's antennas on the Tower and Owner's use of any ground space within the Leased Property within ten (10) days after Lessee's receipt of Owner's written notice of such interference and, if necessary, to cause the interfering party to cease operating the equipment causing said interference; provided, however, such interfering party may thereafter intermittently operate the interfering equipment for purposes of determining if the interference has been cured. Lessee will examine the Property during the Feasibility Period to ensure that no existing use of the Property will interfere with Lessee's authorized use under this Lease. Owner shall not cause, permit or allow any other use of, or condition on, Owner's Property, not existing as of the Execution Date, which causes measurable interference with or impairs (i) the communications facilities of, including the signal strengths of antennas operated by Lessee or its sublessees and/or licensees from the Leased Property or (ii) the use of the Leased Property by Lessee and/or its sublessees and/or licensees. If any such interference occurs, Owner agrees to eliminate or cause the elimination of such interference with Lessee's or its sublessees' and/or licensees' operations of their respective communications facilities, including the signal strength of their antennas and/or use of the Leased Property within ten (10) days after Owner's receipt of Lessee's written notice of such interference and, if necessary, to cause the interfering party to cease operating the facilities causing the interference. Nothing herein shall be read to require Owner to have any duty with respect to Lessee, any sublessee or licensee for any interference caused thereto from any use of Owner's emergency communications equipment on the Tower, or any other use by Owner that predates the deployment of the specific equipment and/or frequencies that are causing or being caused measurable interference.

19. **RIGHTS TO EQUIPMENT; CONDITION ON SURRENDER.**

A. Personal Property. The communications facilities, equipment, improvements (including without limitation the Tower), fixtures and other property of Lessee and its sublessees and/or licensees on the Leased Property shall be and remain the personal property of Lessee and/or its sublessees and/or licensees, even though some of it may be permanently affixed to the land, and Lessee and its sublessees and/or licensees shall be entitled to take or remove all or any portion of their respective communications facilities, equipment, improvements, fixtures and

other property from the Leased Property without any hindrance by, through, or under Owner or the holder of any mortgage, deed of trust, ground lease or other encumbrance. Owner expressly waives all rights of levy, distraint or execution with respect to Lessee's and its sublessees' and/or licensees' property, including without limitation any statutory or common law security interest or landlord's lien for rent. Within ninety (90) days after the termination or expiration of this Lease, Lessee and its sublessees and/or licensees shall have the obligation to remove all or any part of their respective communications facilities, equipment, improvements, fixtures and other property from the Leased Property, except Lessee shall have no obligation to remove the Tower footings. Lessee or its sublessees and/or licensees shall repair or cause to be repaired any damage caused by such removal, and shall otherwise surrender the Leased Property in good condition, ordinary wear and tear, reimbursed damage by fire and other casualty excepted. Any of Lessee's or its sublessees' and/or licensees' communications facilities, equipment, improvements, fixtures and other property that has not been removed from the Property within said ninety (90) day period shall be deemed abandoned by Lessee or its sublessees and/or licensees. At such time, Owner may elect to either retain such property as its own (in which case Lessee shall execute all documentation reasonably requested by owner to formally transfer title of such property to Owner), or have such property removed and the Leased Property and easement areas restored to the condition required above at Lessee's sole expense. Notwithstanding any other provision of this Lease, Owner may require, upon written notice to Lessee, that the Tower and Owner's emergency broadcasting equipment remain on the Lease Property, and Lessee shall execute all documentation reasonably requested by owner to formally transfer title of such property to Owner. To the extent any such transfer of the Tower were to occur on or before Fifteen (15) years after the Commencement Date, Owner shall pay to Lessee the fair market value of any assets transferred to Owner.

20. **BROKERS.** Owner and Lessee each represent and warrant to the other that he, she or it has not negotiated with any broker or agent, real estate or otherwise, in connection with this Lease. Owner and Lessee eaoh agrees that, if any claim is made against the other for a broker's or agent's commission, finder's fee or the like by reason of the acts of the first party, then the first party shall indemnify (with respect to Owner, to the extent permitted by law) and hold the other harmless from and against any and all liabilities, claims, demands, actions, losses, damages, orders, penalties, costs and/or expenses, including, without limitation, reasonable attorneys fees incurred in connection therewith and shall defend such action by legal counsel reasonably acceptable to the other.

21. **ESTOPPEL CERTIFICATES.**

A. Owner. Owner, at the request of Lessee, shall provide Lessee with a certificate stating: (i) whether Owner has any claim against Lessee and if so, stating the nature of such claim; (ii) that Owner recognizes Lessee's ownership of Lessee's communications facilities and other

property; (iii) that Lessee has the right to remove Lessee's communications facilities and other property from the Leased Property notwithstanding that such may be considered a fixture under local law except as otherwise provided in Paragraph 19.A.; (iv) whether an Event of Default by Lessee has occurred or would occur with the giving of notice and/or the passage of time; and (v) that Owner has no interest in and disclaims any interest to Lessee's communications facilities and other property, except such interest as may be granted pursuant to Paragraph 19.A, or to the extent of Owner's communication and associated equipment that may be placed on the Tower or on the Leased Property.

B. Lessee. Lessee, at the request of Owner, shall provide Owner with a certificate stating: (i) that this Lease is unmodified and in full force and effect (or, if there has been any modification, that the same is in full force and effect as modified and stating the modification); (ii) whether or not, to Lessee's knowledge, any set-offs, or defenses exist against the enforcement of any of the agreements, terms covenants or conditions hereof to be performed or complied with by Lessee (and if so specifying the same); and (iii) the date through which the rent has been paid.

22. **NOTICES.** Any notice, request or demand required or permitted to be given pursuant to this Lease shall be in writing and shall be deemed sufficiently given if (i) delivered by messenger at the address of the intended recipient, (ii) sent prepaid by next-work-day Federal Express (or a comparable guaranteed overnight delivery service), or (iii) deposited in the United States first class mail (registered or certified, postage prepaid, with return receipt requested). Any such notice, request, or demand so given shall be deemed given on the day it is delivered by messenger, on the next-work-day after the day of deposit with Federal Express (or a comparable overnight delivery service), or on the day that is two (2) business days after deposit in the United States Mail, as the case may be.

Lessee:

Verizon Wireless Personal Communications LP
dba Verizon Wireless
180 Washington Valley Road
Bedminster, NJ 07921
Attention: Network Real Estate

Owner:

City of Sanibel
c/o City Manager
800 Dunlop Road
Sanibel, Florida 33597
Telephone: (239) 472-3700

Copy to City Attorney:
Kenneth B. Cuyler, Esq.
800 Dunlop Road
Sanibel, Florida 33957
Telephone: (239) 472-4359

Any party may change his, her or its address for notice purposes by giving notice in accordance with this Paragraph 22.

23. **MISCELLANEOUS PROVISIONS.**

A. Title; Undisclosed Liens. Owner represents, warrants and agrees

that Owner is seized of good and sufficient title to and interest in the Owner's Property and has full authority to enter into and execute this Lease and no undisclosed liens, judgments or impediments of title exist on Owner's Property that would affect this Lease. Owner further represents, warrants and agrees that there are no covenants, easements, restrictions or agreements binding on Owner or the Owner's Property which prevent the use of the Leased Property by the Lessee and its sublessees and/or licensees, as set forth in this Lease.

B. Entire Lease; Amendments. This Lease, including the exhibits and attachments which are attached hereto and incorporated herein by this reference, incorporates all agreements and understandings between Owner and Lessee. No prior or other verbal agreements or understandings shall be binding upon Owner or Lessee, and any addition, amendment, variation or modification to this Lease shall be ineffective unless made in writing and signed by Owner and Lessee.

C. Compliance with Governmental Laws. Owner represents, warrants and agrees that throughout the term of this Lease, as may be extended, the Owner's Property including, without limitation, the Leased Property and all improvements thereon, other than improvements owned by Lessee or its sublessees and/or licensees, shall be in compliance with all laws, codes, and regulations of all federal, state and local governmental or quasi-governmental authorities (collectively, "Governmental Laws"). Lessee agrees that any improvements constructed on the Leased Property by Lessee and/or its sublessees and/or licensees and the operation of the communications facilities of Lessee and/or its sublessees and/or licensees on the Leased Property shall be in compliance with all Governmental Laws.

D. Governing Law. This Lease and the performance hereof shall be governed, interpreted, construed and regulated by the laws of the State of Florida.

E. Benefit. This Lease, and each and every covenant and condition herein, is intended to benefit the Leased Property and to run with the Owner's Property and shall extend to and bind the heirs, personal representatives, successors and assigns of the parties hereto.

F. Covenants and Conditions. The parties agree that all of the provisions hereof shall be construed as both covenants and conditions, the same as if the words importing such covenants and conditions has been used in each separate Paragraph.

G. Construction. The parties acknowledge that each has had an opportunity to review and negotiate this Lease and has executed this Lease only after such review and negotiation. The language of this Lease shall be construed simply and according to its fair meaning, and this Lease shall not be construed more strictly in favor or against either party.

H. Nondisturbance Agreement. At Owner's option, this Lease shall be subordinate to any mortgage or deed of trust which from

time to time may encumber all or any part of the Owner's Property, provided that every such mortgagee, beneficiary, trustee, or other holder having rights thereunder agrees to recognize (in writing and in a form reasonably acceptable to Lessee's counsel) the validity of this Lease and Lessee's rights under this Lease, including without limitation Lessee's right to remain in occupancy and have access to the Leased Property, as long as Lessee is not then in default of this Lease beyond any applicable notice and cure period, in the event of a foreclosure or the exercise of any other remedies under any such mortgage or deed of trust. Lessee shall execute whatever instruments may reasonably be required to evidence this subordination. If, as of the date of execution of this Lease, any mortgage, deed of trust, ground lease or other similar encumbrance affects Owner's Property, Owner agrees to obtain from the holder of such mortgage, deed of trust, ground lease, or other encumbrance a written agreement that Lessee shall not be disturbed in its possession, use and enjoyment of the Leased Property as long as an Event of Default by Lessee has not occurred hereunder.

I. Severability. If any portion of this Lease is declared by an arbitrator or arbitrators, or any court of competent jurisdiction, to be invalid or unenforceable, such portion shall be deemed modified to the extent necessary in such arbitrator's or arbitrators', or any court of competent jurisdiction's opinion to render such portion enforceable, and, as so modified, such portion and the balance of this Lease shall continue in full force and effect.

J. Enforcement. If either party institutes any action or proceeding in arbitration to enforce any provision hereof, or any action in any court of competent jurisdiction for damages for any alleged breach of any provisions hereof, the prevailing party in such action or proceeding, in addition to any other award given by the arbitrator(s), or court, shall be entitled to receive from the non-prevailing party such amount as the arbitrator(s), or court, may adjudge to be reasonable attorneys' fees for the services rendered to the prevailing party, together with its other reasonable litigation expenses.

K. Injunctive Relief. In addition to the other remedies provided for in this Lease, any party shall be entitled to immediate restraint by injunction of any violation of any of the covenants, conditions or provisions of this Lease.

L. Headings. The captions of the Paragraphs of this Lease are for convenience of reference only and shall not affect the interpretation of this lease.

M. Lighting of Communications Facilities. Lessee covenants that as of the Execution Date it has made a determination that no laws or regulations of the Federal Aviation Administration (FAA), Federal Communications Commission (FCC) or any other governmental agency or body require or recommend the lighting and/or marking of the Tower, and that no lighting will in fact be placed on the Tower, and that the absence of such lighting is a material condition of this Lease. Notwithstanding the foregoing, in the event there is a change in any

laws, rules or regulations promulgated by the FAA, FCC or any other governmental agency or body, such that lighting and/or marking of the Tower is required, then Lessee shall comply with such requirement, and compliance therewith shall not be deemed a breach of this Lease. Any lighting of ground facilities on the Leased Property shall be in accordance with Owner's ordinances, resolutions, rules and regulations and requisite building permits.

N. Memorandum of Lease. Concurrently with the execution of this Lease, Owner shall execute before a notary and deliver to Lessee for recording a "Memorandum of Lease Agreement", also referenced as "Short Form Lease", in the form of the attached Exhibit "C." Such Memorandum shall not disclose any financial terms, unless required to do so by the laws of the jurisdiction in which such Memorandum is recorded.

O. Arbitration. Any controversy or claim arising out of or relating to this Lease, or the breach of this Lease, may be settled by arbitration in accordance with the rules and regulations of the American Arbitration Association and in accordance with the Florida Arbitration Code, and judgment upon the award rendered by the arbitrator(s) may be entered in any court having jurisdiction thereof. The decision of the arbitrator(s) shall be final and non-appealable. The place of arbitration shall be Fort Myers, Florida. Arbitration shall be an option upon mutual agreement of the parties and shall not be construed as a requirement of this Lease.

P. Waiver. The failure of either party hereto to insist upon strict performance of any of the terms or conditions of this Lease or to exercise any of its rights under this Lease shall not waive such rights and such party shall have the right to enforce such rights at any time and take such action as may be lawful and authorized under this Lease, either in law or in equity.

Q. Casualty. In the event of damage by fire or other casualty to the Leased Property that cannot reasonably be expected to be repaired within forty-five (45) days following same or, if the Owner's Property is damaged by fire or other casualty so that such damage may reasonably be expected to disrupt Lessee's operations at the Leased Property for more than forty-five (45) days, then Lessee may at any time following such fire or other casualty, provided Owner has not completed the restoration required to permit Lessee to resume its operation at the Leased Property, terminate this Lease upon fifteen (15) days written notice to Owner. Any such notice of termination shall cause this Lease to expire with the same force and effect as though the date set forth in such notice were the date originally set as the expiration date of this Lease, and Owner shall, within thirty (30) days after the termination date, reimburse to Lessee any prepaid rent that has not accrued as of the termination date. The Owner's obligation under this subparagraph shall survive termination or expiration of this Lease. Notwithstanding the foregoing, all rental under this Lease shall abate during the period of such fire or other casualty.

R. Emergency removal of collapsed Tower or other facilities. In

the event of a natural disaster such as a hurricane, Owner shall make reasonable attempts to notify Lessee in the event that Lessee's Tower has been damaged or has collapsed. However, in the event that such emergency condition exists and Lessee's Tower or other facilities have collapsed onto Owner's sewer treatment facility, public right-of-way or other public facilities which require the immediate removal of such facilities, it is acknowledged by Lessee that Owner shall remove such Tower and facility in the event that Lessee is unable to do so within the emergency time-frame established by Owner. Under such circumstances, Owner shall have no liability for any additional damage or destruction to Lesee's Tower or other facilities.

S. Submission of Lease. The submission of this Lease for examination does not constitute an offer to lease the Leased Property and this Lease becomes effective only upon the full execution of this Lease by Owner and Lessees.

T. Authority to Execute. Each of the parties hereto warrants to the other that the person or persons executing this Lease on behalf of such party has the full right, power and authority to enter into and execute this Lease on such party's behalf and that no consent from any other person or entity is necessary as a condition precedent to the legal effect of this Lease.

IN WITNESS WHEREOF, the parties have executed this Lease.

OWNER: City of Sanibel

By: _____
~~Carla Brooks Johnston, Mayor~~
800 Dunlop Road
Sanibel, Florida 33957
Mick Denham, Vice Mayor

ATTEST: _____
Pamela Smith, City Clerk

APPROVED AS TO FORM:

_____
Kenneth B. Cuyler, City Attorney

Date: 3/21/06

FINANCIAL SUFFICIENCY APPROVED
5/18/06
Renee M. Lynch, FINANCE DIRECTOR

LESSEE:

Verizon Wireless Personal Communications LP
dba Verizon Wireless

By: _____
Name: Hans F. Leutenegger
Title: Area Vice President, Network, South Area
180 Washington Valley Road
Bedminster, NJ 07921

Address: ~~8021 Research Drive~~
~~Charlotte, NC 28262~~

Date: 5 - 8 - 2006

Witnesses:

By: _____

Name: Steven B. Cole

By: Courtney Phillips

Name: Courtney Phillips

CITY APPROVED 3/21/06

127782_v8

EXHIBIT "A"

DESCRIPTION OF OWNER'S PROPERTY

A PORTION OF GOVERNMENT LOT 7, SECTION 12, TOWNSHIP 46 SOUTH, RANGE 21 EAST, LEE COUNTY, FLORIDA, BEING MORE PARTICULARLY DESCRIBED AS FOLLOWS:

COMMENCE AT THE SOUTHWEST CORNER OF SAID GOVERNMENT LOT 7, THENCE S89°58'04"E ALONG THE SOUTHERLY BOUNDARY OF SAID GOVERNMENT LOT 7 A DISTANCE OF 807.27 FEET TO THE POINT OF BEGINNING, SAID POINT LYING ON THE ARC OF A NON-TANGENT CIRCULAR CURVE CONCAVE TO THE SOUTHWEST (A RADIAL LINE THROUGH SAID POINT BEARS S49°28'03"W); THENCE NORTHWESTERLY ALONG THE ARC OF SAID CURVE HAVING FOR ITS ELEMENTS A RADIUS OF 440.00 FEET, A CENTRAL ANGLE OF 04°18'16", A CHORD DISTANCE OF 33.05 FEET, A CHORD BEARING OF N42°49'05"W, AN ARC DISTANCE OF 33.06 FEET; THENCE N45°01'47"E A DISTANCE OF 36.42 FEET; THENCE N44°58'13"W A DISTANCE OF 110.00 FEET; THENCE S45°01'47"W A DISTANCE OF 50.39 FEET TO A POINT ON THE ARC OF A NON-TANGENT CIRCULAR CURVE CONCAVE TO THE SOUTHWEST (A RADIAL LINE THROUGH SAID POINT BEARS S31°14'58"W); THENCE NORTHWESTERLY ALONG THE ARC OF SAID CURVE HAVING FOR ITS ELEMENTS A RADIUS OF 440.00 FEET, A CENTRAL ANGLE OF 32°14'02", A CHORD DISTANCE OF 244.29 FEET, A CHORD BEARING OF N76°33'53"W, AN ARC DISTANCE OF 247.54 FEET; THENCE N05°18'27"W A DISTANCE OF 101.69 FEET; THENCE S84°41'33"W A DISTANCE OF 20.00 FEET; THENCE N05°18'27"W A DISTANCE OF 243.05 FEET; THENCE N57°23'58"E A DISTANCE OF 225.52 FEET; THENCE S41°45'25"E A DISTANCE OF 165.64 FEET; THENCE N75°25'57"E A DISTANCE OF 167.91 FEET; THENCE S59°08'30"E A DISTANCE OF 110.34 FEET; THENCE S31°59'32"W A DISTANCE OF 129.33 FEET; THENCE S55°00'26"E A DISTANCE OF 210.49 FEET; THENCE S68°58'15"E A DISTANCE OF 141.78 FEET; THENCE S49°19'26"E A DISTANCE OF 84.21 FEET; THENCE S32°14'59"W A DISTANCE OF 159.88 FEET TO A POINT ON THE SOUTHERLY BOUNDARY OF SAID GOVERNMENT LOT 7; THENCE EASTERLY ALONG THE SOUTHERLY BOUNDARY OF SAID GOVERNMENT LOT 7 A DISTANCE OF 368.94 FEET TO THE POINT OF BEGINNING.

SAID PARCEL CONTAINS 6.770 ACRES MORE OR LESS.

DESCRIPTION OF PROPOSED

LESSEE'S LEASED PROPERTY

A PORTION OF TRACT "A" OF THE SANCTUARY AT WOLFERT POINT PHASE 1, AS SHOWN IN PLAT BOOK 50, PAGE 52 IN THE PUBLIC RECORDS OF LEE COUNTY, FLORIDA, (ALSO BEING A PORTION OF LANDS DESCRIBED IN OFFICIAL RECORDS BOOK 2405, PAGE 3508), MORE PARTICULARLY DESCRIBED AS FOLLOWS:

COMMENCE AT THE POINT OF BEGINNING OF THOSE LANDS DESCRIBED IN OFFICIAL RECORDS BOOK 2405, PAGE 3508 OF THE OFFICIAL PUBLIC RECORDS OF LEE COUNTY, FLORIDA; PROCEED SOUTH 80°58'04" EAST ALONG THE SOUTHERLY LINE OF SAID LANDS, A DISTANCE OF 157.52 FEET; THENCE NORTH 08°01'56" EAST, A DISTANCE OF 33.58 FEET TO THE POINT OF BEGINNING OF THE FOLLOWING DESCRIBED PARCEL; THENCE NORTH 04°10'53" EAST, A DISTANCE OF 50.00 FEET; THENCE SOUTH 85°49'07" EAST, A DISTANCE OF 50.00 FEET; THENCE SOUTH 04°10'53" WEST, A DISTANCE OF 50.00 FEET; THENCE NORTH 85°49'07" WEST, A DISTANCE OF 50.00 FEET TO THE POINT OF BEGINNING.

CONTAINING 2,500.0 SQUARE FEET, MORE OR LESS.

DESCRIPTION OF PROPOSED

ACCESS EASEMENT

A PORTION OF TRACT "A" OF THE SANCTUARY AT WOLFERT POINT PHASE 1, AS SHOWN IN PLAT BOOK 50, PAGE 52 IN THE PUBLIC RECORDS OF LEE COUNTY, FLORIDA, (ALSO BEING A PORTION OF LANDS DESCRIBED IN OFFICIAL RECORDS BOOK 2405, PAGE 3508), MORE PARTICULARLY DESCRIBED AS FOLLOWS:

COMMENCE AT THE POINT OF BEGINNING OF THOSE LANDS DESCRIBED IN OFFICIAL RECORDS BOOK 2405, PAGE 3508 OF THE OFFICIAL PUBLIC RECORDS OF LEE COUNTY, FLORIDA; PROCEED SOUTH 80°58'04" EAST ALONG THE SOUTHERLY LINE OF SAID LANDS, A DISTANCE OF 157.52 FEET; THENCE NORTH 08°01'56" EAST, A DISTANCE OF 33.58 FEET TO THE POINT OF BEGINNING OF THE FOLLOWING DESCRIBED PARCEL; THENCE NORTH 81°57'52" WEST, A DISTANCE OF 131.58 FEET; THENCE NORTH 45°38'00" WEST, A DISTANCE OF 247.20 FEET; THENCE NORTH 80°58'04" WEST, A DISTANCE OF 35.87 FEET; THENCE SOUTH 78°40'57" WEST, A DISTANCE OF 169.83 FEET TO A POINT ON THE WESTERLY LINE OF LANDS DESCRIBED IN OFFICIAL RECORDS BOOK 2405, PAGE 3508 (ALSO BEING THE WESTERLY LINE OF TRACT "A", AS SHOWN IN PLAT BOOK 50, PAGE 52); THENCE NORTH 05°18'27" WEST ALONG SAID WESTERLY LINE, A DISTANCE OF 20.11 FEET; THENCE NORTH 78°40'57" EAST, A DISTANCE OF 171.28 FEET; THENCE SOUTH 80°58'04" EAST, A DISTANCE OF 45.52 FEET; THENCE SOUTH 45°37'07" EAST, A DISTANCE OF 248.83 FEET; THENCE SOUTH 81°57'52" EAST, A DISTANCE OF 123.67 FEET; THENCE SOUTH 04°10'53" WEST, A DISTANCE OF 20.06 FEET TO THE POINT OF BEGINNING.

CONTAINING 11,712.9 SQUARE FEET, MORE OR LESS.

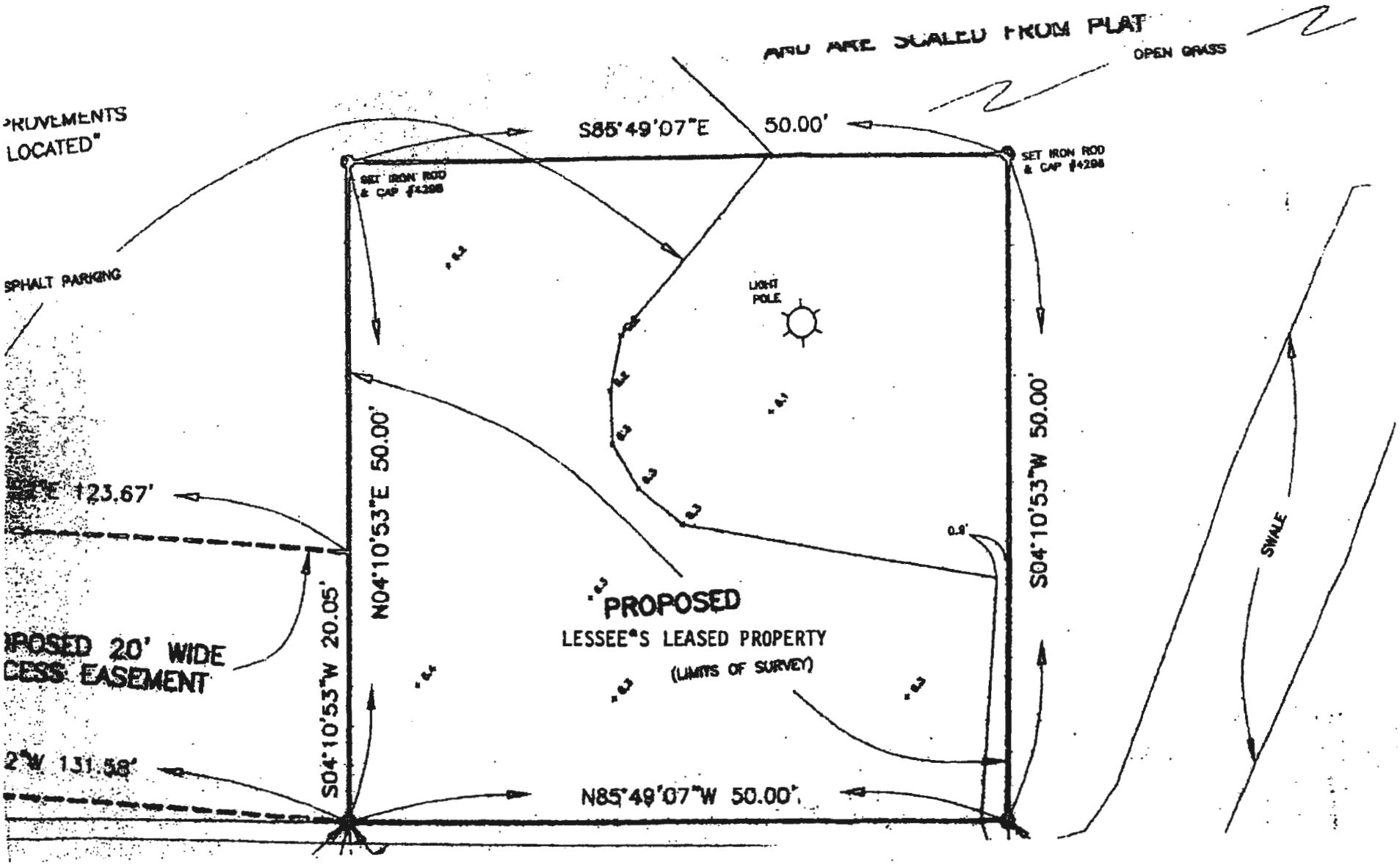

EXHIBIT "B"
Page 2 of 4

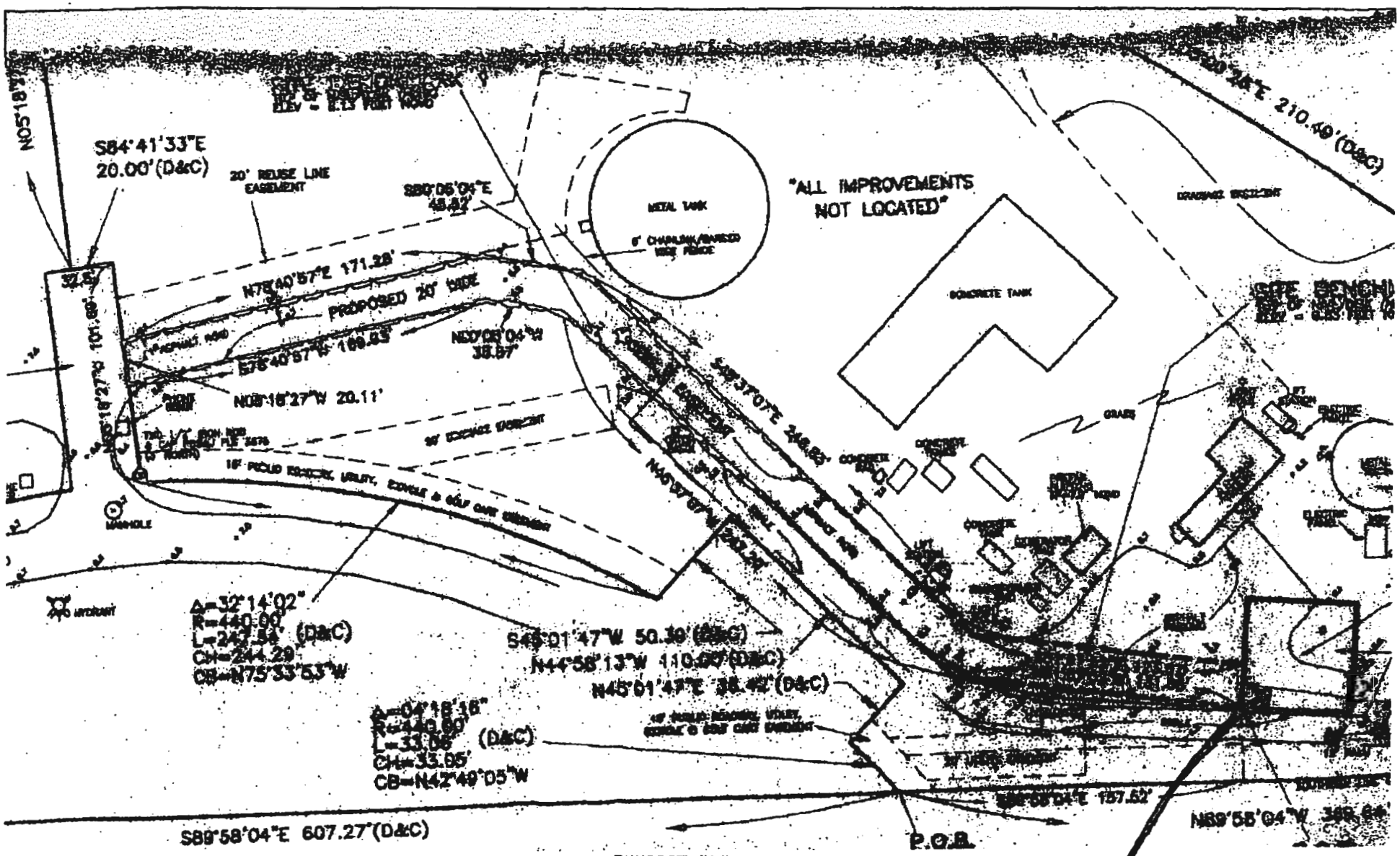

EXHIBIT "B"
Page 3 of 4

LESSEE'S LEASED PROPERTY

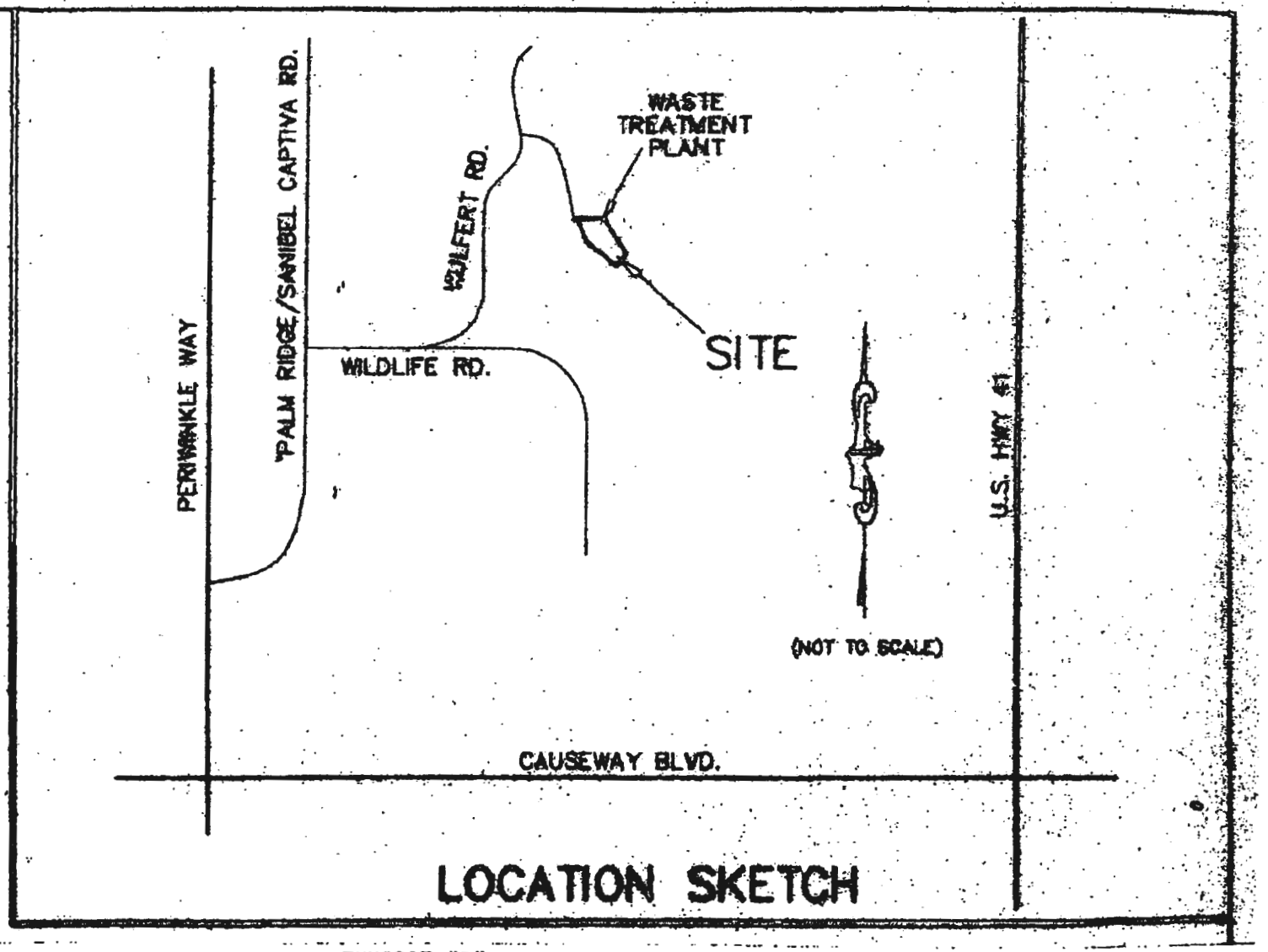
PERIWINKLE WAY
PALM RIDGE/SANIBEL CAPTIVA RD.
WILDLIFE RD.
HULFERT RD.
WASTE TREATMENT PLANT
SITE
(NOT TO SCALE)
U.S. HWY #1
CAUSEWAY BLVD.
LOCATION SKETCH

Upon Recording, Return to:

Robert M. Motes, Esq.
Holland & Knight LLP
One East Broward Boulevard
Suite 1300
Fort Lauderdale, Florida 33301

STATE OF FLORIDA)
)
COUNTY OF LEE)

MEMORANDUM OF LEASE AGREEMENT

This Memorandum of Lease Agreement is made this _____ day of _____, 2006, between **CITY OF SANIBEL**, with a mailing address of 800 Dunlop Road, Sanibel, Florida 33597, hereinafter collectively referred to as "LESSOR", and **VERIZON WIRELESS PERSONAL COMMUNICATIONS LP** d/b/a Verizon Wireless, with its principal office located at 180 Washington Valley Road, Bedminster, New Jersey 07921, hereinafter referred to as "LESSEE". LESSOR and LESSEE are at times collectively referred to hereinafter as the "Parties" or individually as the "Party".

1. LESSOR and LESSEE entered into a Lease Agreement (the "Agreement") on _____, 2006 for an initial term of five (5) years, commencing on the Commencement Date (defined in the Agreement to be the first day of the month after the date LESSEE begins construction of its communications tower on the Premises). The Agreement shall automatically be extended for three (3) additional five (5) year terms unless the LESSEE terminates it at the end of the then current five (5) year term by giving the LESSOR written notice of the intent to terminate at least one hundred eighty (180) days prior to the end of the then current five (5) year term.

2. LESSOR owns certain real property and the improvements thereon commonly known as 2222 Wulfert Road, City of Sanibel, County of Lee, State of Florida (the "Property") as described on the attached Exhibit "A". LESSOR hereby leases and demises to LESSEE a portion of the Property comprised of approximately 2,500 (50 x 50) square feet of land in the location shown and described on Exhibit "B" (the "Premises"). LESSOR also grants and conveys to LESSEE nonexclusive

easements across the Property connecting the Premises with the nearest public right-of-way and public utility easement (as applicable), for (i) unrestricted vehicular and pedestrian access to the Premises and parking on the Property, as needed to install, operate and maintain LESSEE's communications facilities, seven (7) days a week, twenty-four (24) hours a day and (ii) installation, location, operation and maintenance of cable runs and utilities including, without limitation, telephone and electric utilities, all as shown and described on Exhibit "B". In the event any public utility is unable to use the aforementioned easement, LESSOR has agreed to grant an additional easement either to LESSEE or to the public utility at no cost to LESSEE.

3. The terms, covenants and provisions of the Agreement are hereby incorporated by reference into this Memorandum and shall extend to and be binding upon the respective executors, administrators, heirs, successors and assigns of LESSOR and LESSEE.

[Remainder of Page Left Blank, Signature Page to Follow]

IN WITNESS WHEREOF, LESSOR and LESSEE have caused this Memorandum to be duly executed on the date first written hereinabove.

LESSOR:

City of Sanibel

By: _____
Carla Brooks Johnston, Mayor
800 Dunlop Road
Sanibel, Florida 33957

ATTEST: _____
Pamela Smith, City Clerk

APPROVED AS TO FORM:

_____
Kenneth B. Cuyler, City Attorney

Date: _____

LESSEE:

VERIZON WIRELESS PERSONAL COMMUNICATIONS LP
d/b/a VERIZON WIRELESS

BY:_____
Hans F. Leutenegger
Area Vice President – Network,
South Area

STATE OF _____)
) **ACKNOWLEDGMENT**
COUNTY OF _____)

I, _____, a Notary Public for said County and State, do hereby certify that Carla Brooks Johnston personally came before me this day and acknowledged that she is the Mayor of the City of Sanibel, and that she, as Mayor, being authorized to do so, executed the foregoing **MEMORANDUM OF LEASE AGREEMENT** on behalf of the City of Sanibel.

WITNESS my hand and official Notarial Seal, this ___ day of _____, 2006.

_____
Notary Public

My Commission Expires:
_____

(Notary Seal)

STATE OF _____)
) **ACKNOWLEDGMENT**
COUNTY OF _____)

I, _____, a Notary Public for said County and State, do hereby certify that **Hans F. Leutenegger** personally came before me this day and acknowledged that he is the Area Vice President - Network, South Area of **VERIZON WIRELESS PERSONAL COMMUNICATIONS LP** d/b/a Verizon Wireless, and that he, as Area Vice President - Network, South Area, being authorized to do so, executed the foregoing **MEMORANDUM OF LEASE AGREEMENT** on behalf of **VERIZON WIRELESS PERSONAL COMMUNICATIONS LP** d/b/a Verizon Wireless.

WITNESS my hand and official Notarial Seal, this ___ day of _____, 2006.

_____
Notary Public

My Commission Expires:
_____

(Notary Seal)

EXHIBIT A

TO MEMORANDUM OF LEASE

EXHIBIT B

TO MEMORANDUM OF LEASE

109813_v5

EXHIBIT "D"

(OWNERS APPROVED EQUIPMENT SHALL BE SET FORTH ON THIS EXHIBIT WHEN APPROVED PURSUANT TO SECTION 4(C) OF THIS LEASE)

ATTACHMENT 4
OWNER'S CONSENT

to the Supplement dated _____, 2008, by and between T-Mobile South LLC, as Lessee, and Verizon Wireless Personal Communications LP d/b/a Verizon Wireless, as Lessor.

Owner's Consent is not required under the Prime Lease.

ATTACHMENT 5

to the Supplement dated _____ __, 2008, by and between T-Mobile South LLC, as Lessee, and Verizon Wireless Personal Communications LP d/b/a Verizon Wireless, as Lessor

MEMORANDUM OF LEASE

This Memorandum of Lease is entered into on this ___ day of _____, 2008, by and between Verizon Wireless Personal Communications LP d/b/a Verizon Wireless, a Delaware limited partnership, with an office at One Verizon Way, Mail Stop 4AW100, Basking Ridge, New Jersey 07920 (hereinafter referred to as "LESSOR") and T-Mobile South LLC, a Delaware Limited Liability Company, with an office at 3407 W. Dr. Martin Luther King, Jr. Blvd., Tampa, FL 33607 (hereinafter referred to as "LESSEE").

1. LESSOR and LESSEE entered into a Lease on the ____ day of _____, 2008, for the purpose of installing, operating and maintaining a radio communications facility and other improvements. All of the foregoing are set forth in the Lease.

2. The term of the Lease is for five (5) years commencing on _____, 200___ and ending on _____, with four (4) successive five (5) year options to renew. If all options to renew are exercised, the term of the Lease will expire twenty-five (25) years after the Commencement Date (as defined in the Lease).

3. The Land is described in Attachment 1 annexed hereto. That portion of the Land being leased to LESSEE ("Premises") is described in Attachment 2 annexed hereto.

4. The original copy of this Lease is held at the LESSOR's and LESSEE's addresses set forth above.

5. Notwithstanding anything herein, the Lease is subject and subordinate to that certain underlying Lease Agreement dated May 18, 2006 between LESSOR, as tenant thereunder, and City of Sanibel, a municipal corporation, existing under the laws of the State of Florida, as landlord thereunder, as amended. A memorandum of said underlying Lease Agreement is recorded in the Public Records of Lee County, Florida under Instrument Number 2006000224862.

IN WITNESS WHEREOF, the parties have executed this Memorandum of Lease as of the day and year first above written.

LESSEE:
T-Mobile South LLC,
a Delaware limited liability company

By: NOT FOR EXECUTION
(Signature)
Print: Harlan Kickhoefer
Title: Director, Engineering and Operations

Date: _____

WITNESSED:

By:_____
Print Name:_____

By:_____
Print Name:_____

LESSOR:
Verizon Wireless Personal Communications LP
d/b/a Verizon Wireless

By: NOT FOR EXECUTION
(Signature)
Print Name: Hans F. Leutenegger
Title: Area Vice President – Network, South Area
Date: _____

WITNESSED:

By:_____
Print Name:_____

By:_____
Print Name:_____

STATE OF)
) ss.
COUNTY OF _____)

I certify that I know or have satisfactory evidence that **HARLAN KICKHOEFER** is the person who appeared before me, and said person acknowledged that he/she signed this instrument, on oath stated that he/she was authorized to execute the instrument and acknowledged it as the Director, Engineering and Operations, of T-Mobile South LLC, a Delaware limited liability company, to be the free and voluntary act of such party for the uses and purposes mentioned in the instrument.

Dated: _____

_____
Notary Public
Print Name _____
My commission expires _____

(Use this space for notary stamp/seal)

LESSOR'S ACKNOWLEDGEMENT

STATE OF NORTH CAROLINA)
) ss.
COUNTY OF MECKLENBURG)

I certify that I know or have satisfactory evidence that Hans F. Leutenegger is the person who appeared before me, and said person acknowledged that he/she signed this instrument, on oath stated that he/she was authorized to execute the instrument and acknowledged it as the Area Vice President – Network, South Area of Verizon Wireless Personal Communications LP d/b/a Verizon Wireless, a Delaware limited partnership to be the free and voluntary act of such party for the uses and purposes mentioned in the instrument.

Dated: _____

	_____ Notary Public Print Name _____ My commission expires _____

(Use this space for notary stamp/seal)

LEE COUNTY
SOUTHWEST FLORIDA

BOARD OF COUNTY COMMISSIONERS

Bob Janes
District One

A. Brian Bigelow
District Two

Ray Judah
District Three

Tammy Hall
District Four

Frank Mann
District Five

Donald D. Stilwell
County Manager

David M. Owen
County Attorney

Diana M. Parker
County Hearing Examiner

CITY OF SANIBEL
LEGAL DEPARTMENT

August 17, 2009

Julia Guernsey
City of Sanibel
800 Dunlop Road
Sanibel, FL 33957

RE: Lease Agreement – 2222 Wulfert Road, City of Sanibel

Dear Ms. Guernsey:

Please find enclosed the Lease Agreement by the Chairman of the Lease County Board of County Commissioners.

If you have any questions or require additional information, please contact me at (239) 533-3922.

Sincerely,

LEE COUNTY PUBLIC SAFETY

Cindy McBride

Cindy McBride

Enclosure

P.O. Box 398, Fort Myers, Florida 33902-0398 (239) 335-2111
Internet address http://www.lee-county.com

LEASE AGREEMENT
(SITE: 2222 WULFERT ROAD, CITY OF SANIBEL, FLORIDA)

THIS LEASE AGREEMENT (hereinafter the "City/County Lease") is made this 4 day of August, 2009, by and between City of Sanibel, a municipal corporation (hereinafter "City"), and Lee County, Florida, a political subdivision of the State of Florida ("hereinafter "Lee County").

RECITALS:

1. On May 18, 2006, City entered into a Lease Agreement with Verizon Wireless Personal Communications, LP d/b/a Verizon Wireless, a Delaware limited partnership (hereinafter "Verizon") through which Verizon leased a portion of the City's property located at 2222 Wulfert Road, Sanibel, Florida, comprised of approximately 2500 square feet of land in order to construct a 149 foot communication tower (hereinafter "Communication Tower") and to install associated communication-related ground equipment.

2. The Lease Agreement between City and Verizon (hereinafter the "City/Verizon Lease") provides that the City shall have a non-revocable, exclusive license for the use of that portion of the Communication Tower extending from 130 feet to 140 feet (hereinafter "Reserved Tower Space") for the purpose of installing and operating emergency communication equipment. Section 4 of the City/Verizon Lease also provides that the City may sublease "to another government entity for the sole purpose of operating Owner's [City's] emergency, governmental and/or public safety communications as could otherwise be conducted by Owner [City] hereunder."

3. Lee County has requested that the City sublease to Lee County the City's Reserved Tower Space on the Communication Tower and also lease to Lee County a parcel of property adjacent to Verizon's leased 2500 square foot parcel. The purpose of the sublease is for Lee County to install public safety and emergency communications equipment within the Reserved Tower Space and the purpose of the additional Real Property Lease is for Lee County to place all required communication-related ground equipment on a parcel adjacent to the 2500 square foot parcel leased by Verizon. (The Reserved Tower Space and Leased Real Property are collectively sometimes herein referred to as "Leased Property").

4. The City represents and warrants that City is the titleholder of that certain real property commonly known as 2222 Wulfert Road, City of Sanibel, Lee County, Florida (City's Property").

NOW, THEREFORE, in consideration of the covenants set forth below and other good and valuable consideration, acknowledged by the parties to be sufficient and received by each party, the City and Lee County hereby agree as follows:

C11a
8-4-09

1. RECITALS. The above Recitals are acknowledged by the parties to be true and correct and are hereby incorporated in this Agreement as if set forth fully below.

2. SUBLEASE OF RESERVED TOWER SPACE.

   (a) Pursuant to Section 4 of the City/Verizon Lease, the City hereby subleases to Lee County the City's Reserved Tower Space on the Communication Tower consisting of that portion of the Communication Tower extending from (130) feet to (140) feet for the purpose of installing, operating and maintaining Lee County's public safety and emergency communications equipment. Such equipment may include antenna arrays, dishes, cables, wires and all types of similar equipment determined necessary by Lee County for the purpose of installing and operating public safety and emergency communications equipment.

   (b) The City/Verizon Lease between the City of Sanibel and Verizon, a copy of which is attached hereto as Exhibit "A", is hereby incorporated in this City/County Lease and certain rights of the City and Lee County in this City/County Lease are defined, explained and/or constrained by the terms of the City/Verizon Lease. This City/County Lease shall be subject to all conditions, requirements and prerequisites set forth in the City/Verizon Lease including, but not limited to, the following:

      (1) The prior written approval by Verizon of the Lee County's equipment pursuant to Section 4(B) of the City/Verizon Lease;

      (2) Verizon's supervision of the installation of Lee County's equipment pursuant to Section 4(B) of the City/Verizon Lease;

      (3) Any future maintenance or access to the Leased Property and/or Tower to be coordinated with Verizon as set forth in Section 4(B) of the City/Verizon Lease;

      (4) Attachment as an Exhibit "D" to the City/Verizon Lease of the approved equipment to be placed by Lee County in the Reserved Tower Space pursuant to Section 4(C) of the City/Verizon Lease;

      (5) Compliance with Verizon's application process as required by Section 4(C) of the City/Verizon Lease;

      (6) Approval by Verizon, in writing, of all contractors and personnel selected by Lee County to install, maintain and operate the communications equipment pursuant to Section 4(E) of the City/Verizon Lease.

3. LEASE OF REAL PROPERTY FOR COMMUNICATION GROUND EQUIPMENT.

(a) In addition to the Reserved Tower Space to be subleased to Lee County pursuant to Section 2 above, and in order to provide land area for the required equipment to support the public safety and emergency communication equipment installed in the Reserved Tower Space, the City hereby leases to Lee County a parcel of property comprised of approximately 34' x 23' of land at 2222 Wulfert Road shown on the Site Map attached hereto as Exhibit "B" and more particularly shown in detail on Exhibit "C" attached hereto and incorporated herein, (hereinafter referred to as the "Leased Real Property").

(b) City and Lee County understand and agree that the parcel of property described on Exhibit "C" has not been approved in final by the City for purposes of environmental constraints and required development approvals and that the lease of Leased Real Property is subject to final approval by the City with regard to all necessary permitting and City requirements. The City and Lee County understand and agree that the parcel may be adjusted as to general location, size and similar issues, but it is the intent of the parties to provide sufficient land area to meet the needs of Lee County for placement of ground equipment to support the public safety and emergency communication equipment to be placed within the Reserved Tower Space. In the event that the parcel of real property ultimately approved by the City changes in location or configuration from that shown on Exhibit "C" to this City/County Lease, a new Exhibit shall be prepared and attached to this City/County Lease reflecting the new location and/or configuration and stating that such Exhibit is a replacement for Exhibit "C".

(c) City also grants and conveys to Lee County non-exclusive easements across the City's property connecting the Leased Real Property with the nearest public right-of-way and public utility easement (as applicable) for (i) unrestricted vehicular and pedestrian access to the Leased Real Property and Reserved Tower Space and temporary parking on City's property, as needed to install, operate and maintain Lee County's communications facilities, (7) days a week, (24) hours a day and (ii) installation, location, operation and maintenance of cable runs and utilities including, without limitation, telephone and electric utilities. Such Leased Real Property shall be for the sole purpose of supporting, with such equipment as may be necessary, the public safety and emergency communication equipment to be placed within the Reserved Tower Space.

4. LEE COUNTY'S OBLIGATION TO INSTALL PUBLIC SAFETY AND EMERGENCY COMMUNICATION EQUIPMENT IN THE RESERVED TOWER SPACE. In consideration of the City's sublease to Lee County of the Reserved Tower Space and the City's lease to Lee County of the Leased Real Property, Lee County shall install within the Reserved Tower Space and within the Leased Real Property, public safety and emergency communication equipment. Such equipment shall be installed by Lee County, in compliance with all requirements of the City/Verizon Lease and this City/County Lease, within 180 days of the effective date of this City/County Lease Agreement. In the event that Lee County fails to install such public safety and emergency communication equipment within the required time period set forth in this section, this City/County Lease shall then immediately expire unless extended by separate written agreement signed by the City and Lee County setting forth an extended time period within which Lee County shall install such public safety and emergency communication equipment.

5. LEASE TERM.

   (a) The City/Verizon Lease Term is for an initial term of five (5) years commencing on May 18, 2006, with three (3) additional, successive five (5) year extension periods, all as set forth in Section 6 of the City/Verizon Lease. In addition to Verizon's legal ability to provide written notice of Verizon's intention not to extend the City-Verizon Lease as set forth in Section 6 of the City/Verizon Lease, Verizon also reserves the right to terminate the City/Verizon Lease for various reasons set forth in Section 9 of the City/Verizon Lease and under other provisions of the City/Verizon Lease. However, pursuant to Section 19 of the City/Verizon Lease, in the event of a non-renewal or termination by Verizon of the City/Verizon Lease, the City has retained the right to require Verizon to execute all documentation reasonably requested by the City to formally transfer title of the Communication Tower to the City.

   (b) Therefore, the City hereby subleases the Reserved Tower Space to Lee County for a period of thirty (30) years (terminating on July 1, 2039), with the first (approximately) seventeen (17) years being a sublease pursuant to the City/Verizon Lease and, upon the ownership by the City of the entire Communication Tower, a direct lease from the City to Lee County of the Reserved Tower Space for an additional (approximately) thirteen (13) years. Upon the City's ownership of the Communication Tower, this sublease agreement shall be deemed to constitute a lease agreement between the City and Lee County. Additionally, the City hereby leases the Leased Real Property to Lee County for a contemporaneous period of thirty (30) years.

6. RENT. The annual rent to be paid by Lee County to the City for the sublease of the Reserved Tower Space and the lease of the Leased Real Property, together, shall be One Dollar ($1.00).

7. COSTS OF EQUIPMENT AND INSTALLATION; REPLACEMENT OF EQUIPMENT.

   (a) All costs and expenses for, or in any way related to, the purchase of the public safety and emergency communication equipment, its installation, testing, maintenance, repair and/or replacement shall be the sole obligation of Lee County and the City shall have no financial responsibility for such equipment or operation of such equipment except as set forth in this City/County Lease Agreement. In the event of the damage or destruction of the Communication Tower, and/or Lee County's public safety and emergency communication equipment and/or supporting ground equipment, the City shall have no obligation to replace any such facilities or equipment and all such replacement or reconstruction shall be at the sole obligation of Lee County (to the extent such repair or replacement of the Communication Tower is not paid for by Verizon or another entity).

   (b) In the event of the damage, destruction or non-operability of the public safety and emergency communication equipment for any reason, Lee County shall have the obligation, at its sole expense, to replace and make operable the public safety and emergency communication equipment installed within the Reserved Tower Space, or equivalent equipment necessary to operate the public safety and emergency communication network on at least an equivalent basis.

8. APPROVALS; PERMITS; UTLITIES. Lee County shall be responsible for obtaining all licenses, certificates, permits and other approvals required by any federal, state or local governmental (including specifically the City of Sanibel) or quasi-governmental authority for Lee County's use of the Reserved Tower Space, Leased Real Property and/or operation of its public safety and emergency communication equipment. Further, Lee County shall be responsible for the following:

   (a) To install at Lee County's sole expense, any new utilities determined necessary by Lee County or the upgrading of existing utilities for the Leased Real Property or Reserved Tower Space and to pay for all utilities consumed by Lee County at the Leased Real Property or Communication Tower;

   (b) To either separately meter or sub-meter all utilities consumed by Lee County at the Leased Real Property;

   (c) To adhere to all applicable requirements of the City/Verizon Lease which are hereby made a mandatory part of this City/County Lease;

(d) To obtain all necessary City of Sanibel Development Permits or other applicable City permits and nothing in this Agreement shall be construed as a waiver of Lee County's requirement to apply for, obtain and pay any applicable fees for such Development or Construction Permits.

(e) To at all times comply with all ordinances and laws of the City of Sanibel including, but not limited to, vegetation removal, environmental permitting, noise and building ordinances.

9. INDEMNIFICATION AND INSURANCE.

(a) Indemnification by Lee County. Lee County hereby agrees to indemnify and hold City and City's officials, partners, affiliates, agents and employees harmless from and against any and all liabilities, claims, demands, action, losses, damages, orders, penalties, costs and/or expenses including, without limitation, reasonable attorneys fees and costs resulting from: (i) personal injury or property damage arising out of the acts or omissions of Lee County, its agents and/or employees in any way relating to the Reserved Tower Space and/or Leased Real Property; (ii) Lee County's breach of any covenants or provisions of this Lease to be observed or performed by Lee County and failure to cure such breach after the expiration of all applicable cure periods; (iii) any damages or causes of action arising out of or relating to Lee County's use of the Leased Property or City's Property under this Lease; Lee County shall have no obligation to indemnify and hold City and City's officials, partners, affiliates, agents and employees harmless from and against any liabilities, claims, demands, actions, losses, damages, orders, penalties, costs and/or expenses resulting solely from the acts or omissions of City, its officials, partners, affiliates, agents or employees. The obligations of Lee County under this Paragraph 9(a) shall survive termination or expiration of this Lease.

(b) Lee County's Insurance. Lee County shall carry comprehensive general liability insurance with limits of liability thereunder of not less than $1 million combined single limit for bodily injury and/or property damage, including coverage for contractual liability (subject to standard policy exclusions). Such insurance shall name City, as an additional insured with respect to the Leased Property and related easements, shall be issued by an insurance company authorized to do business in the State of Florida and shall provide thirty (30) days prior written notice to City of any cancellation of such policy. Any insurance required to be provided by Lee County under this Paragraph 9(b) may be provided by a blanket insurance policy covering the Leased Property and easements and other properties of Lee County, provided such blanket insurance policy complies with all of the other requirements of this Lease with respect to the type and amount of insurance required.

10. EVENT OF DEFAULT.

(a) Event of Default by Lee County. The occurrence of any one (1) or more of the following events shall constitute an "Event of Default" hereunder by Lee County:

(1) The failure by Lee County to observe or perform any of the covenants or provisions of this Lease to be observed or performed by Lee County where such failure continues for a period of thirty (30) days after Lee County's receipt of written notice thereof from City; provided, however, that it shall not be an Event of Default by Lee County if Lee County commences to cure such failure within such thirty (30) day period and thereafter diligently and expeditiously prosecutes such cure to completion.

(b) Event of Default by City. The occurrence of any one (1) or more of the following events shall constitute an Event of Default hereunder by City:

(1) The failure by City to observe or perform any of the covenants or provisions of this Lease to be observed or performed by City, where such failure continues for a period of thirty (30) days after written notice thereof is given to City, provided, however, that it shall not be an Event of Default by City if City commences to cure such failure within such thirty (30) day period and thereafter diligently and expeditiously prosecutes such cure to completion.

(c) Remedies Upon Default. If an Event of Default occurs by Lee County or City, the non-defaulting party shall have all remedies available to it in law or equity, including without limitation the right to terminate this Lease.

11. ENTIRE LEASE; AMENDMENTS.

(a) This Lease, including the exhibits and attachments which are attached hereto and incorporated herein by this reference, incorporates all agreements and understandings between City and Lee County. No prior or other verbal agreements or understandings shall be binding upon City or Lee County, and any addition, amendment, variation or modification to this Lease shall be ineffective unless made in writing and signed by City and Lee County.

(b) Governing Law. This Lease and the performance hereof shall be governed, interpreted, construed and regulated by the laws of the State of Florida.

12. SEVERABILITY. If any portion of this Lease is declared by any court of competent jurisdiction to be invalid or unenforceable, such portion shall be deemed modified to the extent necessary and, as so modified, such portion and the balance of this Lease shall continue in full force and effect.

13. HEADINGS. The captions of the Paragraphs of this Lease are for convenience of reference only and shall not affect the interpretation of this lease.

14. AUTHORITY TO EXECUTE. Each of the parties hereto warrants to the other that the person or persons executing this Lease on behalf of such party has the full right, power and authority to enter into and execute this Lease on such party's behalf and that no consent from any other person or entity is necessary as a condition precedent to the legal effect of this Lease.

IN WITNESS WHEREOF, the City and Lee County have executed this Lease Agreement as of the date first written above.

CITY: CITY OF SANIBEL

BY: _____
Judith A. Zimomra

Signature of Authorized Officer

Title City Manager

July 09, 2009
Date

ATTEST:

BY: _____
Pamela Smith, City Clerk

APPROVED AS TO FORM:

_____
Kenneth B. Cuyler, City Attorney

COUNTY: LEE COUNTY

BY: Ray Judah
Name

Signature of Authorized Officer

Board of County Commissioners
Title

8/4/09
Date

CHARLIE GREEN,
ATTEST: CLERK OF CIRCUIT COURT

BY: Marcia Wilson
DEPUTY CLERK

APPROVED AS TO FORM

BY: _____
County Attorney's Office

BOARD OF COUNTY COMMISSIONERS SEAL LEE COUNTY, FLORIDA

CONTRACT 4706 OR

LEASE AGREEMENT
SITE: 68907 - Wulfert Road WWTP

THIS LEASE AGREEMENT ("Lease"), is made as of this 18 day of May, 2006, by and between CITY OF SANIBEL, ("Owner"), and VERIZON WIRELESS PERSONAL COMMUNICATIONS LP dba VERIZON WIRELESS, a Delaware limited partnership ("Lessee").

In consideration of the premises and of the mutual obligations and agreements in this Lease, the parties agree as follows:

1. **OWNER'S PROPERTY.** Owner represents and warrants that Owner is the title holder of that certain real property and the improvements thereon commonly known as 2222 Wulfert Road, City of Sanibel, County of Lee, State of Florida ("Owner's Property"), described on the attached Exhibit "A".

2. **LEASE OF PORTION OF OWNER'S PROPERTY; EASEMENTS ACROSS OWNER'S PROPERTY.**

A. Owner hereby leases and demises to Lessee a portion of Owner's Property comprised of approximately 2,500 (50 x 50) square feet of land in the location shown and described on Exhibit "B" ("Leased Property"). Owner also grants and conveys to Lessee nonexclusive easements across the Owner's Property connecting the Leased Property with the nearest public right-of-way and public utility easement (as applicable), for (i) unrestricted vehicular and pedestrian access to the Leased Property and parking on Owner's Property, as needed to install, operate and maintain Lessee's communications facilities, seven (7) days a week, twenty-four (24) hours a day and (ii) installation, location, operation and maintenance of cable runs and utilities including, without limitation, telephone and electric utilities, all as shown and described on Exhibit "B". In the event any public utility is unable to use the aforementioned easement, Owner hereby agrees to grant an additional easement either to Lessee or to the public utility at no cost to Lessee. The Leased Property including, without limitation, the access, cable run and utility easements, may be surveyed by a licensed surveyor, at Lessee's expense. Such survey and/or construction drawings, which shall not vary in any material respect from the easements and Leased Property shown in Exhibit "B", shall then replace Exhibit "B" and become a part hereof.

B. The City of Sanibel is leasing the Leased Property in its proprietary capacity, however, nothing in this Lease shall be construed to prohibit or in any way restrict the City of Sanibel, in its capacity as a local government, from enforcing any and all applicable laws within the City of Sanibel relating to the maintenance, construction and use of Lessee's communications tower. Further, Lessee's compliance with all City of Sanibel conditions of approval set forth in the development permit for Lessee's communication tower (hereinafter referred to as the "Approval Conditions") shall be considered conditions and covenants by Lessee of this Lease, incorporated herein by reference and enforceable under the terms of this Lease, as well. If after issuance of the development permit, Lessee is not satisfied (in Lessee's sole discretion) with the Approval Conditions, then Lessee may elect to terminate this Lease at any time prior to beginning physical construction of the Tower. Once Lessee has begun physical

EXHIBIT "A"

construction of the Tower, the foregoing right of termination shall be deemed waived.

3. **USE OF THE LEASED PROPERTY.** Lessee and its sublessees and/or licensees may use the Leased Property for the installation, removal, securing, repair, replacement, maintenance and operation of a monopole communications tower (the "Tower") not to exceed One Hundred Forty-Nine (149') feet in height, as measured from the top of the Tower structure and not appurtenances thereon, and associated communications facilities which may include personal communications service, cellular, paging, radio, cable, and other communications facilities comprised of, without limitation, antenna arrays, dishes, cables, wires, equipment shelters, buildings, electronics equipment, generators, fuel tank(s), fencing, utility transformers and lines, cable runs, grounding systems, accessories, all as may be modified, added to or substituted from time to time, to the extent permitted in the applicable City of Sanibel ordinances. The Tower shall be designed and constructed in accordance with City of Sanibel Ordinance No. 99-07, codified in the Sanibel Land Development Code as Article XVII, Divisions 1 – 4, Sections 126-1511 through 126-1599, and the Approval Conditions. The final design of the Tower shall be subject to Owner's review and approval (which approval shall not be unreasonably withheld, delayed or conditioned). Further, during the Feasibility Period, as hereinafter defined, and throughout the Lease term, as may be extended, Lessee and its sublessees and/or licensees shall have the right to conduct Feasibility Tests on the Leased Property and Owner's Property, at Lessee's (or sublessee's or licensee's) sole expense.

4. **RESERVED TOWER SPACE.**

A. Owner, subject to the terms and conditions herein, shall have a non-revocable, exclusive license for the use of that portion of the Tower extending from one hundred thirty (130) feet to one hundred forty (140) feet (the "Reserved Tower Space") for the purpose of installing and operating its emergency communications equipment. Lessee shall have the right to substitute an equal amount of space at a location acceptable to Owner (in Owner's sole discretion) to the extent Owner has not exercised its right to use the Reserved Tower Space, and Lessee needs the Reserved Tower Space for its own operations. The substituted tower space shall be considered the Reserved Tower Space from that point forward. Under no circumstances shall Owner license or sublease any portion of the Reserved Tower Space to third parties, except a sublease may be granted by Owner to another government entity for the sole purpose of operating Owner's emergency, governmental and/or public safety communications as could otherwise be conducted by Owner hereunder. Additionally, Owner may sublease a portion of the Reserved Tower Space to a non-governmental entity provided such entity is using equipment on the Tower solely for the purpose of operating Owner's emergency, governmental and/or public safety communications as could otherwise be conducted by Owner hereunder and for no commercial purposes whatsoever. No part of the Leased Property shall be utilized by

Owner for the placement of any necessary ground equipment without prior written consent of Lessee (which consent can be granted or denied in Lessee's sole discretion), and Owner shall use its contiguous property for the placement of any necessary equipment.

B. Conditions for Use by Owner of Tower. Owner's equipment shall have Lessee's prior written approval, such approval not to be unreasonably withheld, delayed or conditioned, and shall be in accordance with the standards and requirements of Lessee, and shall be done under the Lessee's supervision and shall be subject to Lessee's final written approval, such approval not to be unreasonably withheld, delayed or conditioned. Owner will be responsible for the cost of Owner's initial equipment ("Owner's Initial Equipment") and the installation of that approved Owner's Initial Equipment. The supervision, approval and other activities of Lessee under this Paragraph, however, shall not constitute the waiver of any term or condition of this Lease. Scheduling of any and all work on the Leased Property and/or Tower will be coordinated with Lessee. Any future maintenance or access necessitating access by Owner to the Leased Property and/or Tower must be coordinated with Lessee within a reasonable time not less than seventy-two (72) hours prior to work being done, except that such coordination period shall be reduced accordingly based on emergency circumstances. All of Owner's equipment mounted on the Tower must be attached securely to the Tower with approved mounts, hangers, and clamps as directed by Lessee. Failure to comply with the terms and conditions of this Paragraph shall be cause for immediate notification of an Event of Default by Owner, which shall occur pursuant to the provisions of Section 12 of this Lease. Any inspection or approval given or done by Lessee pursuant to this Lease is solely for its own benefit. Lessee shall have no liability or responsibility to the Owner or any third party as a result of any inspection or approval given by Lessee and Owner should not rely upon the same other than for the specific purposes set forth herein.

C. Approved Equipment. Any such approved equipment shall be set forth on Exhibit "D" attached hereto and incorporated herein. Owner shall be required to submit an application to Lessee on a form to be provided by Lessee. Grounds for denying approval shall include, but shall not be limited to, the potential for overstressing the Tower taking into account the present loading on the Tower and the anticipated additional loading by Lessee on the Tower. Lessee shall make its analysis of Owner's application based on best engineering and management practices, but Owner's application shall not be unreasonably denied, delayed or conditioned. Further, in the event that Owner's application is denied by Lessee, there shall be a presumption that any further equipment attached to the Tower by any party, including Lessee, will overstress the Tower and no further equipment shall be added by any party, including Lessee, until Lessee establishes that such additional equipment can be appropriately added without overstressing the Tower when Owner's equipment was denied. If Lessee approves of Owner's application but conditions its approval on Owner making certain Tower modifications in

order to avoid overstressing of the Tower, and Owner refuses to make such modifications, then Lessee or another user of the Tower shall be permitted to add equipment to the Tower if (i) the conditions of the immediately preceding sentence are satisfied or (ii) overstressing of the Tower would result from the additional equipment and Lessee or such other user is willing to make the necessary Tower modifications to avoid overstressing of the Tower. To the extent Owner's approved equipment has not been decided upon between the parties prior to the execution of this Lease, at such time as Owner's application is submitted and approved by Lessee, and signed by both parties, it will be attached as Exhibit "D" to all original copies of this Lease.

D. Maintenance of Owner's Equipment. All of Owner's equipment shall be purchased and installed at the expense of Owner, and all of Owner's equipment, including, but not limited to, Owner's Initial Equipment, must be kept and maintained by Owner at all times, at its expense, in a good state of repair and maintenance and in compliance with all applicable Rules and Regulations of the Federal Communications Commission, Federal Aviation Agency and all applicable codes and regulations of the municipality, county and state concerned. Under this Lease, Lessee assumes no responsibility for the licensing, operation, and/or maintenance of Owner's radio equipment. To the extent permitted by law, Owner shall defend, indemnify and save Lessee harmless from any claims or suits arising by reason of Owner's failure to so keep and maintain its equipment or to comply with such laws, rules or regulations.

E. Approval of Contractors. It is further understood and agreed Lessee must approve of, in writing, all contractors and personnel chosen by Owner to install, maintain and operate the Owner's equipment and that Owner's maintenance and operation of its equipment will in no way damage or interfere with the Lessee's use of the Leased Property, Tower, antennae and appurtenances. Lessee's approval of such contractors and personnel shall not be unreasonably withheld, delayed or conditioned.

F. Owner shall have the option to utilize the Reserved Tower Space during the initial five (5) year term of this Lease. To the extent Owner has not filed an application with Lessee to utilize the Reserved Tower Space prior to the expiration of the initial term of this Lease, Owner shall lose its rights in and to the Reserved Tower Space, and Lessee shall be free to use the same for its own purposes or to sublease or license the same to third parties.

5. **FEASIBILITY PERIOD.** The period of time commencing on the date that this Lease has been executed by both Owner and Lessee ("Execution Date") until the earlier of (i) the date that Lessee commences installation of Lessee's communications facilities on the Leased Property or (ii) sixty (60) days from the Execution Date, shall be referred to herein as the "Feasibility Period". Upon two (2) business days notice to Owner, delivered in accordance with Paragraph 22 of this Lease, Lessee, its agents and contractors shall have the right to enter

upon the Owner's Property between 8:00 A.M. and 5:00 P.M._during the Feasibility Period to conduct tests and studies (collectively, "Feasibility Tests"), at Lessee's expense, to determine the suitability of the Leased Property for Lessee's communications facilities and intended use. The Feasibility Tests may include, without limitation, surveys, soils tests, environmental assessments and radio wave propagation measurements. Lessee shall restore the Owner's Property to its original condition, reasonable wear and tear excepted, and at its sole expense upon completion of such Feasibility Tests. In consideration of Owner granting Lessee the right to conduct Feasibility Tests during the Feasibility Period, Lessee agrees to pay Owner the sum of One Hundred Dollars ($100.00) within thirty (30) days of the Execution Date. If Lessee determines in Lessee's sole and absolute discretion, that the Leased Property is not suitable for Lessee's communications facilities or intended use after conducting any of such Feasibility Tests, Lessee shall have the right to terminate this Lease in accordance with the Provisions of Paragraph 9, prior to the end of the Feasibility Period. From and after the Execution Date, the provisions of this Lease shall be in effect except that the Lease term and obligation to pay rent shall not commence until the Commencement Date. Except as otherwise provided herein, the "Commencement Date" shall be defined as the date that is the first day of the month after the date Lessee begins construction of the Tower. No construction or installation shall occur (other than Feasibility Tests) prior to the date Lessee is granted a development permit and building permit by the City of Sanibel. To the extent that any suit, appeal or other proceeding instituted by third parties against Owner and/or Lessee delays the construction of the Tower or Lessee's ability to operate its equipment from the Tower once constructed, notwithstanding the obtaining of a building permit by Lessee, the Commencement Date shall not occur until the resolution of any such suit, appeal or proceeding, with finality, such date as shall be agreed upon by the parties for purposes of certainty.

6. **TERM; AND EXTENSIONS.**

A. Initial Term. This Lease shall be for an initial term of five (5) years and zero (0) months beginning on the Commencement Date.

B. Extensions. This Lease shall automatically be extended on the same terms and conditions (other than the annual rent which shall escalate in accordance with the provisions of Paragraph 7) for three (3) additional, successive five (5) year extension periods unless Lessee gives Owner written notice of Lessee's intention not to extend this Lease at least one hundred eighty (180) days prior to the end of the then-current term.

7. **RENT.**

A. Initial Rent. Annual rent shall be paid in equal monthly installments in advance beginning on the Commencement Date and on first (1st) day of each month thereafter to Owner at the address set forth for notices in Paragraph 22 or to such other address as Owner may advise Lessee, in writing, pursuant to the notice provisions of Paragraph 22. The annual rent shall be Twenty-Five Thousand and

00/100 Dollars ($25,000.00). The initial monthly rent payment shall be paid on or before the Commencement Date.

B. Escalations. Beginning on the first anniversary of the Commencement Date, and annually thereafter, the annual rent shall be an amount equal to the annual rent in effect for the immediately preceding one (1) year period, increased by three percent (3%).

C. Additional Rent.

(i) In the event Lessee subleases any portion of the Leased Property, any rental paid by any sublessee(s) shall be divided between Owner and Lessee in the following manner: 50% to Owner and 50% to Lessee. Lessee agrees that any such sublessee(s) shall be instructed to pay the foregoing percentage amounts directly to Owner and Lessee. Lessee shall not be responsible to Owner for the collection or payment of rents by the sublessee(s) to Owner, and Lessee shall have no liability to Owner in the event sublessee(s) fail to make such payment(s). Lessee will provide Owner with a tri-party agreement to be executed by Lessee, sublessee(s) and Owner to confirm the direct payment obligation from the sublessee(s) to Owner, to set forth Owner's remedies in the event of non-payment or late payment by sub-lessee and to indicate Owner has been notified of the sublease.

(ii) It is understood and agreed by the parties hereto that the foregoing rental percentage amounts shall only apply if Lessee is able to accommodate all of the ground space needs of such sublessee(s) facilities within the Leased Property. If Lessee is unable to accommodate all of the ground space needs of any such sublessee(s) within the Leased Property, then such sublessee(s) will be required to obtain the necessary ground space from Owner and will have to enter into a separate agreement with Owner for the necessary ground space within Owner's Property that sublessee(s) requires to locate its facilities. In this event, Lessee shall receive 100% of the rental or fees paid by such sublessee(s) to Lessee for the tower space being leased or licensed from Lessee, and Owner shall receive 100% of the rental or fees paid by such sublessee(s) to Owner for the ground space being leased or licensed from Owner.

8. **APPROVALS; UTILITIES.** Lessee, at Lessee's expense, shall be responsible for (i) obtaining all licenses, certificates, permits and other approvals required by any federal, state or local governmental or quasi-governmental authority for Lessee and its sublessees and/or licensees' use of the Leased Property and/or operation of their respective communications facilities thereon (collectively, "Approvals") and (ii) installing new utilities or upgrading existing utilities on the Leased Property and across the Owner's Property necessary for the operation of its communications facilities and paying for all utilities consumed by Lessee and its sublessees and/or licensees at the Leased Property. Lessee and its sublessees and/or licensees shall either separately meter or sub-meter all utilities consumed by Lessee and its sublessees and/or licensees. Owner agrees to cooperate with Lessee and its sublessees and/or licensees in obtaining

and/or maintaining, at no expense to Owner, such Approvals, utility services and easements reasonably required for Lessee's and its sublessees' and/or licensees' use of the Leased Property and/or operation of their respective communications facilities thereon, including, without limitation, the execution of all documents reasonably required for such Approvals, utility services and easements, provided such documents are not inconsistent with the terms of this Lease.

9. **TERMINATION.** Lessee shall have the right to terminate this Lease at any time without further liability hereunder if Lessee determines that any one (1) or more of the following events is occurring or has occurred:

A. Approvals and/or Easement Not Obtainable. All Approvals and/or easements for Lessee's intended use of, or operation or construction of its communications facilities on, the Leased Property cannot be obtained by the Commencement Date; or

B. Approvals and/or Easements Cancelled. Any Approval and/or easement for Lessee's intended use of, or operation or construction of its communications facilities on, the Leased Property is canceled, withdrawn, terminated or denied or expires or lapses; or

C. Ownership; Authority. Owner does not have legal or sufficient ownership of the Leased Property or the authority to enter into this Lease; or

D. Hazardous Material. Within thirty (30) days of learning that the Owner's Property contains a Hazardous Material, as defined in Paragraph 14, not introduced to the Property by Lessee or one of its sublessees or licensees and not discovered or discoverable during the performance of a Phase I environmental study of the Property during the Feasibility Period; or

E. Title. The status of the title to the Leased Property is unacceptable, in Lessee's sole discretion, prior to the Commencement Date; or

F. Feasibility. Based on the results of any Feasibility Tests conducted during the Feasibility Period, the Leased Property is not suitable for Lessee's intended use or the operation or construction of its communications facilities, in Lessee's sole and absolute discretion.

G. Technical Compatibility. Lessee determines that the Leased Property is no longer technically compatible for its intended use.

H. Annual Termination. Upon each annual anniversary of the Commencement Date, provided Lessee has notified Lessor in writing pursuant to Section 22 of this Lease of Lessee's intent to terminate at least 120 days prior to such termination.

I. Loss of Approvals. In the event any Approval necessary for Lessee's continued operations at the Leased Property is canceled through no fault of Lessee.

J. Other. In the event construction of the Tower or Lessee's

ability to operate its equipment from the Tower once constructed is delayed due to any suit, appeal or other proceeding instituted by third parties against Owner and/or Lessee, and Lessee determines that resolution of any such suit, appeal or proceeding, with finality, will not occur in a timely manner.

Under any of the above circumstances, Lessee may terminate this Lease by giving Owner written notice thereof delivered in accordance with the provisions of Paragraph 22. If Lessee elects to terminate this Lease pursuant to this Paragraph 9, this Lease shall terminate as of the date set forth in the notice of termination sent by Lessee to Owner, which date shall not be more than one hundred twenty (120) days from the date of such notice. Within thirty (30) days after such termination, Owner shall pay to Lessee any prepaid annual rent that has not accrued as of the date of such termination. Owner's obligation to pay the foregoing rental amount shall survive termination of this Lease.

10. **ASSIGNMENT; SUBLEASE; LICENSE.**

A. This Lease may be sold, assigned or transferred by Lessee without any approval or consent of Owner to Lessee's principal(s), affiliates, or any subsidiary of Lessee, its principal(s) or affiliates; to any entity which acquires all or substantially all of Lessee's assets in the market defined by the Federal Communications Commission in which the Owner's Property is located by reason of a merger, acquisition or other business reorganization; or to any entity which acquires or receives an interest in the majority of communication towers of Lessee in the market defined by the Federal Communications Commission in which the Owner's Property is located. As to other parties, this Lease may not be sold, assigned or transferred without the written consent of Owner, which such consent will not be unreasonably withheld, delayed or conditioned. No such assignment to third parties shall relieve Lessee of its obligations hereunder for the remaining portion of the then-current lease term. Further, any such sale, assignment or transfer, even made with the written consent of Owner, shall be made specifically subject to all applicable City of Sanibel Ordinances, Resolutions and the Approval Conditions.

B. Notwithstanding the foregoing, Lessee may sublease any portion of the Leased Property at its sole discretion, upon notice to Owner, provided that such sublease complies with all applicable requirements of City of Sanibel Ordinance 99-07, codified in the Sanibel Land Development Code as Article XVII, Divisions 1 – 4, Sections 126-1511 through 126-1599, and the Approval Conditions. Any sublease that is entered into by Lessee shall be subject to the provisions of this Lease and shall be binding upon the successors, assigns, heirs and legal representatives of the respective parties hereto. To the extent that any renewal periods under this Lease are included in the term of any such sublease, the sublease shall be conditioned on the extension of this Lease, and shall automatically terminate upon the non-renewal, expiration or early termination of this Lease. The term "sublease", "sublet", "sublessee" and any other similar term shall apply to any situation

by which Lessee allows a third party use of the Leased Property for co-location, whether it be by formal sublease, license or other agreement. All rights and responsibilities of Lessee set forth in this Lease shall be enjoyed by and binding on any sublessee. Such sublease shall not act to relieve Lessee of its obligations hereunder.

C. Material to Owner's decision to enter into this Lease is Lessee's representation and warranty that it will comply with all applicable provisions of City Ordinance 99-07, and the Approval Conditions including, but not limited to, the obligation to allow for co-location on the Tower constructed on the Leased Property at reasonable rates and subject to the terms hereof. Provided that Lessee is not in violation of these or any other requirements of the Ordinance, Lessee shall have the sole right to determine whether it will allow any specific sublessee, other than Owner, to co-locate on the Tower.

11. INDEMNIFICATION AND INSURANCE.

A. Indemnification by Lessee. Lessee hereby agrees to indemnify and hold Owner and Owner's officials, partners, affiliates, agents and employees harmless from and against any and all liabilities, claims, demands, action, losses, damages, orders, penalties, costs and/or expenses including, without limitation, reasonable attorneys fees and costs resulting from: (i) personal injury or property damage arising out of the acts or omissions of Lessee, its agents and/or employees in any way relating to the Leased Property; (ii) Lessee's breach of any covenants or provisions of this Lease to be observed or performed by Lessee and failure to cure such breach after the expiration of all applicable cure periods; (iii) any damages or causes of action arising out of or relating to Lessee's, or any of its sublessees' or licensees' use of the Leased Property or Owner's Property under this Lease; and/or (iv) personal injury or property damage (subject to the waiver of subrogation set forth in Paragraph 11.D. below) arising out of a failure or collapse, for any reason, of the Tower or attached facilities (except any of Owner's equipment) to be constructed on the Leased Property. Notwithstanding any of the foregoing, Lessee shall have no obligation to indemnify and hold Owner and Owner's officials, partners, affiliates, agents and employees harmless from and against any liabilities, claims, demands, actions, losses, damages, orders, penalties, costs and/or expenses resulting solely from the acts or omissions of Owner, its officials, partners, affiliates, agents or employees. The obligations of Lessee under this Paragraph 11.A shall survive termination or expiration of this Lease.

B. Lessee's Insurance. Lessee shall carry comprehensive general liability insurance with limits of liability thereunder of not less than $2.5 million combined single limit for bodily injury and/or property damage, including coverage for contractual liability (subject to standard policy exclusions). Such insurance shall name Owner, as an additional insured with respect to the Leased Property and related easements, shall be issued by an insurance company authorized to do business in the state in which the Leased Property is located and shall provide thirty (30) days prior written notice to Owner of any cancellation of

such policy. On or before the Commencement Date, Lessee shall deliver to Owner a certificate evidencing that such insurance is in effect, and, thereafter, within ten (10) business days of Owner's request for any such certificate. Any insurance required to be provided by Lessee under this Paragraph 11.B. may be provided by a blanket insurance policy covering the Leased Property and easements and other properties of Lessee, provided such blanket insurance policy complies with all of the other requirements of this Lease with respect to the type and amount of insurance required.

C. Owner's Insurance. To the extent permitted by law, Owner shall carry comprehensive general liability insurance with limits of liability thereunder of not less than $2.5 million combined single limit for bodily injury and/or property damage, including coverage for contractual liability (subject to standard policy exclusions), covering Owner's Property. Such insurance shall be issued by an insurance company authorized to do business in the state in which the Owner's Property is located. On or before the Commencement Date, Owner shall deliver to Lessee a certificate evidencing that such insurance is in effect, and, thereafter, within ten (10) business days of Lessee's request for any such certificate. Any insurance required to be provided by Owner under this Paragraph 11.C. may be provided by a blanket insurance policy covering the Owner's Property and other properties of Owner, provided such blanket insurance policy complies with all of the other requirements of this Lease with respect to the type and amount of insurance required.

12. EVENT OF DEFAULT.

A. Event of Default by Lessee. The occurrence of any one (1) or more of the following events shall constitute an "Event of Default" hereunder by Lessee:

(i) The failure by Lessee to make any payment of rent or any other payment required to be made by Lessee hereunder, as and when due, where such failure continues for a period of fifteen (15) days after Lessee's receipt of written notice thereof from Owner.

(ii) The failure by Lessee to observe or perform any of the covenants or provisions of this Lease to be observed or performed by Lessee, other than as specified in Paragraph 12.A.(i), where such failure continues for a period of thirty (30) days after Lessee's receipt of written notice thereof from Owner; provided, however, that it shall not be an Event of Default by Lessee if Lessee commences to cure such failure within such thirty (30) day period and thereafter diligently and expeditiously prosecutes such cure to completion.

B. Event of Default by Owner. The occurrence of any one (1) or more of the following events shall constitute an Event of Default hereunder by Owner:

(i) The failure by Owner to observe or perform any of the covenants or provisions of this Lease to be observed or performed by Owner, where such failure continues for a

period of thirty (30) days after written notice thereof is given to Owner, provided, however, that it shall not be an Event of Default by Owner if Owner commences to cure such failure within such thirty (30) day period and thereafter diligently and expeditiously prosecutes such cure to completion, provided, further, Owner shall not be granted more than thirty (30) days to cure a monetary breach of this Lease.

(ii) If Owner defaults or an event of default occurs under any mortgage, deed of trust, any lease under which Owner holds title to any portion of Owner's Property, or any other similar encumbrance and such default or event of default adversely affects Lessee's and/or its sublessees' and/or licensees' use of the Lease Property or the operation of Lessee's and/or its sublessees' and/or licensees' communications facilities on the Leased Property.

(iii) A voluntary or involuntary petition in bankruptcy is filed by or against Owner, or Owner becomes insolvent (meaning, unable to pay his, her or its debts as they become due), or Owner makes a transfer or conveyance in constructive or actual fraud of creditors or makes a general arrangement or general assignment for the benefit of creditors.

C. Remedies Upon Default. If an Event of Default occurs by Lessee or Owner, the non-defaulting party shall have all remedies available to it in law or equity, including without limitation the right to terminate this Lease. In the event Lessee terminates this Lease due to an Event of Default by Owner, then within thirty (30) days after such termination, Owner shall pay to Lessee any prepaid annual rent that has not accrued as of the date of such termination. Owner's obligation to pay the foregoing rental amount shall survive termination of this Lease.

13. **SALE OR TRANSFER BY OWNER.** Should Owner, at any time during the term of this Lease, as may be extended, sell, lease, transfer or otherwise convey all or any portion of Owner's Property to any transferee other than Lessee, such sale, lease, transfer or other conveyance shall be subject to this Lease and all of Lessee's rights hereunder.

14. **HAZARDOUS SUBSTANCES.**

A. Lessee shall undertake an environmental study, at Lessee's sole expense, during the Feasibility Period, to the extent necessary to satisfy itself with respect to the presence of any Hazardous Substances on or near the Leased Property. Lessee hereby agrees that it will not use, store or dispose of any Hazardous Substances at or near the Leased Property in violation of any applicable federal, state or local laws or regulations. For purpose of this provision, "Hazardous Substances" include any substance identified as hazardous, toxic, or dangerous in any applicable federal, state, or local law or regulation, including petroleum products. Lessee agrees to indemnify and hold Owner harmless from any cost, liability or expense (including without limitation, cost of cleanup or fines, reasonable attorney fees, and court or administrative proceedings) incurred on account of contamination of the Owner's Property or Leased Property by any

Hazardous Substance used, stored or disposed of by Lessee. Lessee's obligations under this Paragraph 14 shall survive the termination, for any reason, or expiration of this Lease.

B. Owner represents and warrants that it has no knowledge of any Hazardous Substances on the Owner's Property, except those substances and materials which are used, regularly or intermittently, as part of Owner's municipal sewage treatment plant operation located on Owner's Property, which is acknowledged by Lessee to be the primary and ongoing use for Owner's_Property. Owner shall be responsible for all obligations of compliance with any and all environmental and industrial hygiene laws, including any regulations, guidelines, standards, or policies of any governmental authorities regulating or imposing standards of liability or standards of conduct with regard to any environmental or industrial hygiene conditions or concerns as may now or at any time hereafter be in effect, that are or were in any way related to activity now conducted in, on, or in any way related to the Owner's Property, unless such conditions or concerns are caused by the activities of Lessee. To the extent permitted by law, Owner shall hold Lessee harmless and indemnify Lessee from and assume all duties, responsibility and liability at Owner's sole cost and expense, for all duties, responsibilities, and liability (for payment of penalties, sanctions, forfeitures, losses, costs, or damages) and for responding to any action, notice, claim, order, summons, citation, directive, litigation, investigation or proceeding which is in any way related to: (i) Owner's failure to comply with any environmental or industrial hygiene law, including without limitation any regulations, guidelines, standards, or policies of any governmental authorities regulating or imposing standards of liability or standards of conduct with regard to any environmental or industrial hygiene concerns or conditions as may now or at any time hereafter be in effect, unless such compliance results from conditions caused by Lessee; and (ii) any environmental or industrial hygiene conditions arising out of or in any way related to the condition of the Owner's Property or activities conducted thereon, unless such environmental conditions are caused by Lessee. Owner's obligations under this Paragraph 14 shall survive the termination, for any reason, or expiration of this Lease.

15. CONDEMNATION.

A. Entire Condemnation. In the event the whole of Owner's Property, including, without limitation, the Leased Property, shall be permanently taken or condemned for public purposes, or sold to a condemning authority under threat of condemnation to prevent taking, this Lease shall automatically terminate as of the day of the taking, condemnation or sale.

B. Partial Condemnation. In the event any portion of the Leased Property shall be permanently taken or condemned for public purposes, or sold to a condemning authority under threat of condemnation to prevent taking, and as a result of such taking, condemnation or sale, Lessee determines, in its sole discretion, that it can not continue operation of its communications facilities, then Owner agrees that

Lessee may use and/or construct upon an alternate portion of Owner's Property which is equally suitable for Lessee's purposes, provided such alternate portion is available and will not interfere with Owner's other use of Owner's Property at that time. The location of the alternate portion of Owner's Property to which Lessee may relocate shall be mutually determined by Owner and Lessee. If an alternate portion of Owner's Property is available and acceptable to both Owner and Lessee, then Owner and Lessee shall enter into an amendment to this Lease designating such alternate portion of Owner's Property as the Leased Property. In the event no alternate portion of the Owner's Property is agreeable to both Lessee and Owner, this Lease shall automatically terminate as of the day of the taking, condemnation or sale.

C. Notwithstanding anything contained in Paragraphs 15.A. or 15.B. to the contrary, in the event of any taking, condemnation or sale in lieu of a taking of the Owner's Property, Lessee may terminate this Lease upon fifteen (15) days written notice to Owner if such condemnation may reasonably be expected to disrupt Lessee's operations at the Leased Property for more than forty-five (45) days.

D. Condemnation Award. Owner shall receive the entire condemnation award for the land and such other improvements as are owned by Owner, and Lessee hereby expressly assigns to Owner any and all right, title and interest of Lessee now or hereafter arising in and to any such award. Notwithstanding the foregoing, Lessee shall have the right to recover from such authority, but not from Owner, any compensation as may be awarded to Lessee on account of Lessee's leasehold interest, moving and relocation expenses, interruption of business and depreciation to and removal of the personal property and fixtures of Lessee.

D. Rebate of Rent. If this Lease is terminated pursuant to the provisions of Paragraphs 15.A., 15.B., or 15.C., Owner shall, within thirty (30) days after the termination date, reimburse to Lessee any prepaid rent that has not accrued as of the termination date, and all rights and obligations of Owner and Lessee arising after the date of termination shall terminate, except as specifically set forth in this Lease. The Owner's obligation under this subparagraph shall survive termination or expiration of this Lease.

16. **LIENS.**

A. Mechanics' Liens. Lessee shall keep the Leased Property free from any liens arising out of any work performed, materials furnished, or obligations incurred by or for Lessee, its sublessees or licensees. Lessee shall, within twenty (20) days of Lessee's receipt of written notice from Owner of the imposition of such lien, (i) cause the same to be released of record by payment or (ii) deliver to Owner a bond in the amount of one hundred ten percent (110%) of the amount of the lien. Upon delivery of the bond to Owner, Lessee may contest the validity of the lien. Once the lien is released of record, any bond provided by Lessee to Owner shall be released and returned to Lessee. No work which Owner permits

Lessee to perform on the Lease Property shall be deemed to be for the use of benefit of Owner so that no mechanics or other lien shall be allowed against the estate of Owner by reason of its consent to such work. Owner shall have the right to post notices that it is not responsible for payment for any such work.

17. **TAXES; MAINTENANCE.**

A. Taxes. Lessee shall be responsible for paying all personal property taxes assessed directly upon Lessee's communications facilities, and requiring that its sublessees and licensee's pay all personal property taxes assessed directly upon its sublessee's or licensee's communications facilities, located on the Leased Property. Lessee also shall be responsible for paying to Owner, as additional rent, all applicable real estate taxes assessed directly upon the Leased Property (including any portion of such taxes attributable to Lessee's communications facilities) within thirty (30) days of Lessee's receipt from Owner of a tax bill evidencing such taxes, and Owner shall pay such taxes to the appropriate governmental authorities upon receipt of such funds from Lessee. Lessee shall pay to Owner, all applicable sales taxes levied against the annual rent paid by Lessee to Owner, and Owner shall pay such sales taxes to, and file all required forms with, the appropriate governmental authorities upon receipt of such sales taxes levied against Owner's income derived from the Leased Property. Lessee shall have the right, at its sole option and at its sole cost and expense, to appeal, challenge or seek modification of any real estate tax assessment or billing for which Lessee is wholly or partly responsible for payment under this Lease. Owner shall reasonably cooperate with Lessee in filing, prosecuting and perfecting any appeal or challenge to real estate taxes as set forth in the preceding sentence, including but not limited to, executing any consent to appeal or other similar document.

B. Maintenance. Lessee, at Lessee's expense, shall be responsible for maintaining, repairing and replacing Lessee's communications facilities located on the Leased Property and shall cause its sublessees and/or licensees to maintain, repair and replace their respective communications facilities located on the Leased Property. All maintenance, repairs, and replacement required pursuant to this paragraph 17.B. shall be performed in good and workmanlike manner and shall be in compliance with all Governmental Laws, as defined in Paragraph 23.C. Owner will maintain the Owner's Property, excluding the Leased Property, in good condition, reasonable wear and tear excepted.

18. **QUIET ENJOYMENT AND NON-INTERFERENCE.**

A. Quiet Enjoyment. Owner represents, warrants and agrees that Lessee, upon paying the rent and performing the covenants and provisions in this Lease to be observed or performed by Lessee shall peaceably and quietly have and enjoy the Leased Property.

B. Interference. A material inducement to Owner's entering into this Lease is the right to place Owner's

emergency communications equipment (identified in Paragraph 4) on the Tower. Moreover, Lessee hereby acknowledges that Owner's emergency communications equipment on the Tower may be required during times of emergency. Accordingly, Lessee hereby agrees that it has not, nor shall it enter into any sublease or license to allow, or construct or permit the construction or placement of, any facility that would cause measurable interference to the operation of Owner's emergency communications equipment on the Tower. If any such interference occurs, Lessee agrees at its sole cost and expense, to eliminate or cause the elimination of such interference with the operation of Owner's emergency communications equipment on the Tower, including the signal strength of Owner's antennas on the Tower and Owner's use of any ground space within the Leased Property within ten (10) days after Lessee's receipt of Owner's written notice of such interference and, if necessary, to cause the interfering party to cease operating the equipment causing said interference; provided, however, such interfering party may thereafter intermittently operate the interfering equipment for purposes of determining if the interference has been cured. Lessee will examine the Property during the Feasibility Period to ensure that no existing use of the Property will interfere with Lessee's authorized use under this Lease. Owner shall not cause, permit or allow any other use of, or condition on, Owner's Property, not existing as of the Execution Date, which causes measurable interference with or impairs (i) the communications facilities of, including the signal strengths of antennas operated by Lessee or its sublessees and/or licensees from the Leased Property or (ii) the use of the Leased Property by Lessee and/or its sublessees and/or licensees. If any such interference occurs, Owner agrees to eliminate or cause the elimination of such interference with Lessee's or its sublessees' and/or licensees' operations of their respective communications facilities, including the signal strength of their antennas and/or use of the Leased Property within ten (10) days after Owner's receipt of Lessee's written notice of such interference and, if necessary, to cause the interfering party to cease operating the facilities causing the interference. Nothing herein shall be read to require Owner to have any duty with respect to Lessee, any sublessee or licensee for any interference caused thereto from any use of Owner's emergency communications equipment on the Tower, or any other use by Owner that predates the deployment of the specific equipment and/or frequencies that are causing or being caused measurable interference.

19. **RIGHTS TO EQUIPMENT; CONDITION ON SURRENDER.**

A. Personal Property. The communications facilities, equipment, improvements (including without limitation the Tower), fixtures and other property of Lessee and its sublessees and/or licensees on the Leased Property shall be and remain the personal property of Lessee and/or its sublessees and/or licensees, even though some of it may be permanently affixed to the land, and Lessee and its sublessees and/or licensees shall be entitled to take or remove all or any portion of their respective communications facilities, equipment, improvements, fixtures and

other property from the Leased Property without any hindrance by, through, or under Owner or the holder of any mortgage, deed of trust, ground lease or other encumbrance. Owner expressly waives all rights of levy, distraint or execution with respect to Lessee's and its sublessees' and/or licensees' property, including without limitation any statutory or common law security interest or landlord's lien for rent. Within ninety (90) days after the termination or expiration of this Lease, Lessee and its sublessees and/or licensees shall have the obligation to remove all or any part of their respective communications facilities, equipment, improvements, fixtures and other property from the Leased Property, except Lessee shall have no obligation to remove the Tower footings. Lessee or its sublessees and/or licensees shall repair or cause to be repaired any damage caused by such removal, and shall otherwise surrender the Leased Property in good condition, ordinary wear and tear, reimbursed damage by fire and other casualty excepted. Any of Lessee's or its sublessees' and/or licensees' communications facilities, equipment, improvements, fixtures and other property that has not been removed from the Property within said ninety (90) day period shall be deemed abandoned by Lessee or its sublessees and/or licensees. At such time, Owner may elect to either retain such property as its own (in which case Lessee shall execute all documentation reasonably requested by owner to formally transfer title of such property to Owner), or have such property removed and the Leased Property and easement areas restored to the condition required above at Lessee's sole expense. Notwithstanding any other provision of this Lease, Owner may require, upon written notice to Lessee, that the Tower and Owner's emergency broadcasting equipment remain on the Lease Property, and Lessee shall execute all documentation reasonably requested by owner to formally transfer title of such property to Owner. To the extent any such transfer of the Tower were to occur on or before Fifteen (15) years after the Commencement Date, Owner shall pay to Lessee the fair market value of any assets transferred to Owner.

20. **BROKERS.** Owner and Lessee each represent and warrant to the other that he, she or it has not negotiated with any broker or agent, real estate or otherwise, in connection with this Lease. Owner and Lessee each agrees that, if any claim is made against the other for a broker's or agent's commission, finder's fee or the like by reason of the acts of the first party, then the first party shall indemnify (with respect to Owner, to the extent permitted by law) and hold the other harmless from and against any and all liabilities, claims, demands, actions, losses, damages, orders, penalties, costs and/or expenses, including, without limitation, reasonable attorneys fees incurred in connection therewith and shall defend such action by legal counsel reasonably acceptable to the other.

21. **ESTOPPEL CERTIFICATES.**

A. Owner. Owner, at the request of Lessee, shall provide Lessee with a certificate stating: (i) whether Owner has any claim against Lessee and if so, stating the nature of such claim; (ii) that Owner recognizes Lessee's ownership of Lessee's communications facilities and other

property; (iii) that Lessee has the right to remove Lessee's communications facilities and other property from the Leased Property notwithstanding that such may be considered a fixture under local law except as otherwise provided in Paragraph 19.A.; (iv) whether an Event of Default by Lessee has occurred or would occur with the giving of notice and/or the passage of time; and (v) that Owner has no interest in and disclaims any interest to Lessee's communications facilities and other property, except such interest as may be granted pursuant to Paragraph 19.A, or to the extent of Owner's communication and associated equipment that may be placed on the Tower or on the Leased Property.

B. Lessee. Lessee, at the request of Owner, shall provide Owner with a certificate stating: (i) that this Lease is unmodified and in full force and effect (or, if there has been any modification, that the same is in full force and effect as modified and stating the modification); (ii) whether or not, to Lessee's knowledge, any set-offs, or defenses exist against the enforcement of any of the agreements, terms covenants or conditions hereof to be performed or complied with by Lessee (and if so specifying the same); and (iii) the date through which the rent has been paid.

22. **NOTICES.** Any notice, request or demand required or permitted to be given pursuant to this Lease shall be in writing and shall be deemed sufficiently given if (i) delivered by messenger at the address of the intended recipient, (ii) sent prepaid by next-work-day Federal Express (or a comparable guaranteed overnight delivery service), or (iii) deposited in the United States first class mail (registered or certified, postage prepaid, with return receipt requested). Any such notice, request, or demand so given shall be deemed given on the day it is delivered by messenger, on the next-work-day after the day of deposit with Federal Express (or a comparable overnight delivery service), or on the day that is two (2) business days after deposit in the United States Mail, as the case may be.

Lessee:

Verizon Wireless Personal Communications LP
dba Verizon Wireless
180 Washington Valley Road
Bedminster, NJ 07921
Attention: Network Real Estate

Owner:

City of Sanibel
c/o City Manager
800 Dunlop Road
Sanibel, Florida 33597
Telephone: (239) 472-3700

Copy to City Attorney:
Kenneth B. Cuyler, Esq.
800 Dunlop Road
Sanibel, Florida 33957
Telephone: (239) 472-4359

Any party may change his, her or its address for notice purposes by giving notice in accordance with this Paragraph 22.

23. **MISCELLANEOUS PROVISIONS.**

A. Title; Undisclosed Liens. Owner represents, warrants and agrees

that Owner is seized of good and sufficient title to and interest in the Owner's Property and has full authority to enter into and execute this Lease and no undisclosed liens, judgments or impediments of title exist on Owner's Property that would affect this Lease. Owner further represents, warrants and agrees that there are no covenants, easements, restrictions or agreements binding on Owner or the Owner's Property which prevent the use of the Leased Property by the Lessee and its sublessees and/or licensees, as set forth in this Lease.

B. Entire Lease; Amendments. This Lease, including the exhibits and attachments which are attached hereto and incorporated herein by this reference, incorporates all agreements and understandings between Owner and Lessee. No prior or other verbal agreements or understandings shall be binding upon Owner or Lessee, and any addition, amendment, variation or modification to this Lease shall be ineffective unless made in writing and signed by Owner and Lessee.

C. Compliance with Governmental Laws. Owner represents, warrants and agrees that throughout the term of this Lease, as may be extended, the Owner's Property including, without limitation, the Leased Property and all improvements thereon, other than improvements owned by Lessee or its sublessees and/or licensees, shall be in compliance with all laws, codes, and regulations of all federal, state and local governmental or quasi-governmental authorities (collectively, "Governmental Laws"). Lessee agrees that any improvements constructed on the Leased Property by Lessee and/or its sublessees and/or licensees and the operation of the communications facilities of Lessee and/or its sublessees and/or licensees on the Leased Property shall be in compliance with all Governmental Laws.

D. Governing Law. This Lease and the performance hereof shall be governed, interpreted, construed and regulated by the laws of the State of Florida.

E. Benefit. This Lease, and each and every covenant and condition herein, is intended to benefit the Leased Property and to run with the Owner's Property and shall extend to and bind the heirs, personal representatives, successors and assigns of the parties hereto.

F. Covenants and Conditions. The parties agree that all of the provisions hereof shall be construed as both covenants and conditions, the same as if the words importing such covenants and conditions has been used in each separate Paragraph.

G. Construction. The parties acknowledge that each has had an opportunity to review and negotiate this Lease and has executed this Lease only after such review and negotiation. The language of this Lease shall be construed simply and according to its fair meaning, and this Lease shall not be construed more strictly in favor or against either party.

H. Nondisturbance Agreement. At Owner's option, this Lease shall be subordinate to any mortgage or deed of trust which from

time to time may encumber all or any part of the Owner's Property, provided that every such mortgagee, beneficiary, trustee, or other holder having rights thereunder agrees to recognize (in writing and in a form reasonably acceptable to Lessee's counsel) the validity of this Lease and Lessee's rights under this Lease, including without limitation Lessee's right to remain in occupancy and have access to the Leased Property, as long as Lessee is not then in default of this Lease beyond any applicable notice and cure period, in the event of a foreclosure or the exercise of any other remedies under any such mortgage or deed of trust. Lessee shall execute whatever instruments may reasonably be required to evidence this subordination. If, as of the date of execution of this Lease, any mortgage, deed of trust, ground lease or other similar encumbrance affects Owner's Property, Owner agrees to obtain from the holder of such mortgage, deed of trust, ground lease, or other encumbrance a written agreement that Lessee shall not be disturbed in its possession, use and enjoyment of the Leased Property as long as an Event of Default by Lessee has not occurred hereunder.

I. Severability. If any portion of this Lease is declared by an arbitrator or arbitrators, or any court of competent jurisdiction, to be invalid or unenforceable, such portion shall be deemed modified to the extent necessary in such arbitrator's or arbitrators', or any court of competent jurisdiction's opinion to render such portion enforceable, and, as so modified, such portion and the balance of this Lease shall continue in full force and effect.

J. Enforcement. If either party institutes any action or proceeding in arbitration to enforce any provision hereof, or any action in any court of competent jurisdiction for damages for any alleged breach of any provisions hereof, the prevailing party in such action or proceeding, in addition to any other award given by the arbitrator(s), or court, shall be entitled to receive from the non-prevailing party such amount as the arbitrator(s), or court, may adjudge to be reasonable attorneys' fees for the services rendered to the prevailing party, together with its other reasonable litigation expenses.

K. Injunctive Relief. In addition to the other remedies provided for in this Lease, any party shall be entitled to immediate restraint by injunction of any violation of any of the covenants, conditions or provisions of this Lease.

L. Headings. The captions of the Paragraphs of this Lease are for convenience of reference only and shall not affect the interpretation of this lease.

M. Lighting of Communications Facilities. Lessee covenants that as of the Execution Date it has made a determination that no laws or regulations of the Federal Aviation Administration (FAA), Federal Communications Commission (FCC) or any other governmental agency or body require or recommend the lighting and/or marking of the Tower, and that no lighting will in fact be placed on the Tower, and that the absence of such lighting is a material condition of this Lease. Notwithstanding the foregoing, in the event there is a change in any

laws, rules or regulations promulgated by the FAA, FCC or any other governmental agency or body, such that lighting and/or marking of the Tower is required, then Lessee shall comply with such requirement, and compliance therewith shall not be deemed a breach of this Lease. Any lighting of ground facilities on the Leased Property shall be in accordance with Owner's ordinances, resolutions, rules and regulations and requisite building permits.

N. Memorandum of Lease. Concurrently with the execution of this Lease, Owner shall execute before a notary and deliver to Lessee for recording a "Memorandum of Lease Agreement", also referenced as "Short Form Lease", in the form of the attached Exhibit "C." Such Memorandum shall not disclose any financial terms, unless required to do so by the laws of the jurisdiction in which such Memorandum is recorded.

O. Arbitration. Any controversy or claim arising out of or relating to this Lease, or the breach of this Lease, may be settled by arbitration in accordance with the rules and regulations of the American Arbitration Association and in accordance with the Florida Arbitration Code, and judgment upon the award rendered by the arbitrator(s) may be entered in any court having jurisdiction thereof. The decision of the arbitrator(s) shall be final and non-appealable. The place of arbitration shall be Fort Myers, Florida. Arbitration shall be an option upon mutual agreement of the parties and shall not be construed as a requirement of this Lease.

P. Waiver. The failure of either party hereto to insist upon strict performance of any of the terms or conditions of this Lease or to exercise any of its rights under this Lease shall not waive such rights and such party shall have the right to enforce such rights at any time and take such action as may be lawful and authorized under this Lease, either in law or in equity.

Q. Casualty. In the event of damage by fire or other casualty to the Leased Property that cannot reasonably be expected to be repaired within forty-five (45) days following same or, if the Owner's Property is damaged by fire or other casualty so that such damage may reasonably be expected to disrupt Lessee's operations at the Leased Property for more than forty-five (45) days, then Lessee may at any time following such fire or other casualty, provided Owner has not completed the restoration required to permit Lessee to resume its operation at the Leased Property, terminate this Lease upon fifteen (15) days written notice to Owner. Any such notice of termination shall cause this Lease to expire with the same force and effect as though the date set forth in such notice were the date originally set as the expiration date of this Lease, and Owner shall, within thirty (30) days after the termination date, reimburse to Lessee any prepaid rent that has not accrued as of the termination date. The Owner's obligation under this subparagraph shall survive termination or expiration of this Lease. Notwithstanding the foregoing, all rental under this Lease shall abate during the period of such fire or other casualty.

R. Emergency removal of collapsed Tower or other facilities. In

the event of a natural disaster such as a hurricane, Owner shall make reasonable attempts to notify Lessee in the event that Lessee's Tower has been damaged or has collapsed. However, in the event that such emergency condition exists and Lessee's Tower or other facilities have collapsed onto Owner's sewer treatment facility, public right-of-way or other public facilities which require the immediate removal of such facilities, it is acknowledged by Lessee that Owner shall remove such Tower and facility in the event that Lessee is unable to do so within the emergency time-frame established by Owner. Under such circumstances, Owner shall have no liability for any additional damage or destruction to Lesee's Tower or other facilities.

S. Submission of Lease. The submission of this Lease for examination does not constitute an offer to lease the Leased Property and this Lease becomes effective only upon the full execution of this Lease by Owner and Lessees.

T. Authority to Execute. Each of the parties hereto warrants to the other that the person or persons executing this Lease on behalf of such party has the full right, power and authority to enter into and execute this Lease on such party's behalf and that no consent from any other person or entity is necessary as a condition precedent to the legal effect of this Lease.

IN WITNESS WHEREOF, the parties have executed this Lease.

OWNER: City of Sanibel

By: _____
~~Carla Brooks Johnston, Mayor~~
800 Dunlop Road
Sanibel, Florida 33957
Mick Denham, Vice Mayor

ATTEST: _____
Pamela Smith, City Clerk

APPROVED AS TO FORM:

_____
Kenneth B. Cuyler, City Attorney

Date: 3/21/06

FINANCIAL SUFFICIENCY APPROVED
3/18/06
Renee M. Lynch, FINANCE DIRECTOR

LESSEE:

Verizon Wireless Personal Communications LP
dba Verizon Wireless

By: _____
Name: Hans F. Leutenegger
Title: Area Vice President, Network, South Area
Address: ~~8921 Research Drive Charlotte, NC 28262~~
180 Washington Valley Road
Bedminster, NJ 07921

Date: 5-8-2006

Witnesses:

By: _____

Name: Steven B. Cole

By: Courtney Phillips

Name: Courtney Phillips

CITY APPROVED 3/21/06

127782_v8

RECEIVED
JUL 15 2010
PLANNING DEPT.
CITY OF SANIBEL

Application Compliance Statement

Verizon Wireless – Donax Street Long Form Application For Telecommunications Tower

Verizon Wireless is proposing to locate a 149-foot tall monopole style tower on the City of Sanibel's Donax Street Wastewater Reclamation Facility. The City staff has determined that the request must go through a Long Form review. The following is an analysis of how the request meets all of the applicable City Code requirements for such a facility.

A. Site is in a Preferred Telecommunications Tolerant Area and on City Owned Land.

Section 126-1536 of the City Code provides for designated "telecommunications tolerant areas," which are preferred locations, usually buffered from residential views by vegetation and/or distance."[1] The property on which the request is to be located, the City owned[2] Donax Street wastewater reclamation facility,[3] is such a "tolerant" area.[4] Additionally, the property is in the encouraged grouping of sites[5] and, as such, is to be reviewed through an expedited permitting process,[6] under the provisions of section 78-7 of the Code, pertaining to the City's exemption from specific requirements of the Land Development Code.[7]

B. There Are No Alternative Structures.

1. The City Code provides that, before a permit for a tower is issued, it must be confirmed that no existing tower or other structure will meet the technical requirements of the applicant provider.[8] According to the City's information, the closest structure which could be used for collocation is the existing tower at City Hall. At 1.7 miles away from the proposed site, that is too far west to meet Verizon Wireless' design requirements. Therefore, there are no existing towers or other structure available.

2. Submittal Materials to Demonstrate Compliance With Section

a. Exhibit A – Report addressing the availability of existing structures of sufficient height within Verizon Wireless' search ring which may serve as alternatives to the proposed tower and, if available, why they are not being used.[9]

b. Exhibit B – Map of Verizon Wireless' other facilities in and around the City.[10]

c. Exhibit C - Demonstration that designed service cannot be provided from existing sites.[11]

d. Exhibit D - Verizon Wireless' FCC license.[12]

C. Siting.

1. Not Visually Obtrusive. The site will meet the preference of not being readily observable from adjacent public streets and the beaches,[13] will not constitute a visually obtrusive structure as seen from public view,[14] and will minimize visual impact on adjacent properties and bodies of water.[15] The design of the facility is consistent with the wastewater reclamation

property on which it is located[16] and from most surrounding public views, the facility will be largely screened or obscured by trees or structures.[17]

2. No Environmental Impact. Located and sited on the existing wastewater reclamation facility, which is not ecologically sensitive, the request will have minimal to no effect on environmental resources.[18] The facility's location and siting will require a federal Environment Assessment filing, but only because it is in the 100 year flood plain; it does not trigger any other of the NEPA criteria.[19] The tower will not use guy wires or be lighted, so will not have any impact on migratory birds.[20] The site will be on the existing wastewater reclamation facility, on an altered site, in an area currently largely cleared and impacted, so it will not have any negative impact on wildlife and vegetation.[21]

3. No Impact on Historic Sites and Structures. The facility will not detract from the values of any historic site or structures or properties included or eligible for inclusion on the National Register of Historic Places.[22]

4. Complies with Applicable Setbacks. The site will meet the applicable minimum setbacks, in that it will meet the G zoning district principal use setbacks, will be more than 25 feet from any property lines and open bodies of water, and will be many times more than 50% of the tower height from the centerline of Donax Street.[23]

5. Submittal Materials to Demonstrate Compliance With Section

a. Exhibit E – Photo simulations illustrating how the facility will appear from public view.[24]

D. Tower Design.

1. Height. The requested tower height is 149 feet, which is allowed in the "telecommunications tolerant area" in which the tower is proposed.[25] This height was proposed by the City to provide the maximum collocation opportunities for commercial and public antennas and will meet Verizon Wireless' design height requirements. [26]

2. Monopole Type Design. The request is for a monopole type tower design, which will be designed for collocation.[27] The monopole will be as unobtrusive as is reasonably possible to provide the designed services while maximizing the collocation opportunities, which reduces the need for another tower in the area.[28] The design will be the narrowest feasible to provide the required stability and loading.[29] The monopole will not use guy wires.[30]

3. Collocation. The tower will be designed for at least two other service providers' antenna, assuming antenna designs at least comparable to Verizon Wireless' antennas, and will be made available at reasonable market rates and terms.[31]

4. Construction Codes. The tower, and all parts of the facility, will comply with all applicable construction and safety codes.[32]

RECEIVED
JUL 15 2010
PLANNING DEPT.
CITY OF SANIBEL

5. Color. The tower will have a non-reflective galvanized finish,[33] gray in color, which has been consistently found to reduce visual obtrusiveness.[34] The antennas will be off-white or gray, to blend in with the tower and the sky.[35]

6. Antenna Placement. The antennas used will be full arrays and the antenna supports will be as visually unobtrusive as reasonably possible to provide the strength and stability required.[36] Due consideration was given to the use of close mounted/cross polarized antennas, but it was determined that such use would require Verizon Wireless to reserve two antenna heights on the tower, to provide enough room for all of the designed services, lessening the number of potential collocation opportunities on the tower.[37]

7. Lighting. The tower will not be lighted.[38]

8. Foundation. The foundation will not disturb or penetrate the aquiclude (or, if required, such penetration will be properly sealed), permit saltwater intrusion or otherwise endanger the integrity of the freshwater lens.[39]

9. Accessory Equipment Finishes. The antenna brackets and accessory equipment will be of noncombustible and corrosive-resistant materials. The appropriate hardware and equipment subject to rust or corrosion will be properly coated and/or finished to guard against corrosion and electrolytic action.[40]

10. Submittal Materials to Demonstrate Compliance With Section

a. Exhibit F – Statement of Intent to Allow Collocation[41]

E. Site Design.

1. Compatibility. The tower will be located in a "tolerance" area, so the first level of compatibility under the Code is met.[42] The tower and compound will be sited on the property away from public streets and behind existing mature landscaping, so as to limit its visual impact on the public view and ensure its compatibility with surrounding land uses.[43]

2. Signage. No signage or advertising will be attached to the tower.[44] The only signs for the compound will be those providing emergency contact information and as required by the FCC.[45]

3. Equipment Buildings. The equipment buildings will meet all applicable building safety codes[46] and setbacks[47] and will be screened from surrounding public view by the provided and existing landscaping.[48] Any portion of the equipment buildings visible from surrounding properties will be compatible in appearance with the surrounding buildings and structures.[49]

4. Landscaping. The site is screened by existing landscaping. In addition to retaining the existing landscaping, the site will be further screened with the relocation of trees from the site to the area between the site and the closest adjacent property and the addition of landscaping along the southern portion of the construction area, to augment the existing vegetation.[50]

5. Security Lighting. The compound will not be lighted. Any lighting for the exterior of the equipment buildings will meet the outdoor lighting standards of the Code.[51]

6. Safe Design. All parts of the facility will maintain the required clearances from electrical lines and equipment.[52] The site will be enclosed by an eight foot tall chain link fence, with barbed wire and a locked gate, so as to create a secure barrier to unauthorized entry.[53]

7. Noise. The noise created by the facility will only be from the air conditioners for the equipment, similar to a residential size air conditioner, and from the occasional testing of the facility emergency generators. All noise levels will comply with the applicable requirements of the Code.[54]

8. Access. The facility will be accessible by service vehicles.[55]

9. Submittal Materials to Demonstrate Compliance With Section.

a. Exhibit G - Site plan[56]

F. Additional Requirements.

1. Insurance. The facility will carry the amount of insurance required, per the provisions of the site lease with the City.[57]

Prepared by:
Laura B. Belflower, M.U.R.P., J.D.
Laura B. Belflower, P.A.

RECEIVED
JUL. 15 2010
PLANNING DEPT.
CITY OF SANIBEL

RECEIVED
JUL 15 2010
PLANNING DEPT.
CITY OF SANIBEL

Endnotes:

[1] Section 126-1536(a), Sanibel City Code.
[2] Section 126-1587(a), Sanibel City Code.
[3] Section 126-1590(h), Sanibel City Code.
[4] Section 126-1536(b), Section 126-1538(a)(2), and Section 126-1587(b)(2), Sanibel City Code.
[5] Section 126-1536(c), Sanibel City Code.
[6] Id.
[7] Section 126-1560(d), Sanibel City Code.
[8] Section 1538(a)(1), Section 126-1590(o), Section 126-1593(a), Section 126-1597(b)(1), Sanibel City Code.
[9] Section 126-1593(a) and Section 126-1561(8), Sanibel City Code.
[10] Section 126-1561(7) and (44), Sanibel City Code.
[11] Section 126-1561(55), Sanibel City Code.
[12] Section 126-1561(31), Sanibel City Code.
[13] Section 126-1538(a)(3)c., Sanibel City Code.
[14] Section 126-1593(d), Sanibel City Code.
[15] Section 126-1598(h)(3), Sanibel City Code.
[16] Section 126-1598(h)(4), Sanibel City Code.
[17] Section 126-1598(e), Section 126-1598(h)(4), and Section 126-1598(i), Sanibel City Code.
[18] Section 126-1590(a), Sanibel City Code.
[19] Section 126-1561(37), Sanibel City Code.
[20] Section 126-1561(50), Sanibel City Code.
[21] Id.
[22] Section 126-1596, Sanibel City Code.
[23] Section 126-1593(d), Sanibel City Code.
[24] Section 126-1561(5)e. and (23), Sanibel City Code.
[25] Section 126-1536(e), Section 126-1587(b)(2) and (c), Section 126-1589(7)b., Sanibel City Code.
[26] Section 126-1538(a)(1)c. and Section 126-1593(e), Sanibel City Code.
[27] Section 126-1537, Section 126-1538(a)(1)e., and Section 126-1593(b), Sanibel City Code.
[28] Section 126-1538(a)(3)a. and Section 126-1597(a), Sanibel City Code.
[29] Section 126-1590(l), Section 126-1598(a), and Section 126-1598(f), Sanibel City Code.
[30] Section 126-1590(c), Sanibel City Code.
[31] Section 126-1538(a)(1)e. and Section 126-1597(b)(2) - (5), Sanibel City Code.
[32] Section 126-1591, Sanibel City Code.
[33] Section 126-1589(2)b. and Section 126-1598(k), Sanibel City Code.
[34] Section 126-1538(a)(3)a. and Section 126-1598(h)(1) and (2), Sanibel City Code.
[35] Section 126-1589(2)a. and Section 126-1598(h)(1), (j), and (k), Sanibel City Code.
[36] Section 126-1590(m) and (n), Sanibel City Code.
[37] Section 126-1538(a)(3)a. and Section 126-1598(f), Sanibel City Code.
[38] Section 126-1538(a)(3)b. and Section 126-1589(3)a., Sanibel City Code.
[39] Section 126-1590(b), Sanibel City Code.
[40] Section 126-1590(i), Sanibel City Code.
[41] Section 126-1561(10), Sanibel City Code.
[42] Section 126-1536(a), Sanibel City Code.
[43] Section 126-1589(1), Sanibel City Code.
[44] Section 126-1538(a)(3)b. and Section 126-1589(4)b., Sanibel City Code.
[45] Section 126-1589(4)a., Sanibel City Code.
[46] Section 126-1538(a)(3)b., Sanibel City Code.
[47] Section 126-1590(g), Sanibel City Code.
[48] Section 126-1598(g), Sanibel City Code.
[49] Section 126-1538(a)(3)b. and Section 126-1598(g), Sanibel City Code.
[50] Section 126-1598(l), Sanibel City Code.
[51] Section 126-1589(3)b., Sanibel City Code.
[52] Section 126-1589(5)a., Sanibel City Code.
[53] Section 126-1589(5)b., c., and d., Sanibel City Code.

RECEIVED
JUL 15 2010
PLANNING DEPT.
CITY OF SANIBEL

[54] Section 126-1589(6), Sanibel City Code.
[55] Section 126-1593(c), Sanibel City Code.
[56] Section 126-1561(2) – (4), (5)a. - d, (6), (10), (15), (18), (20), (24), (25), (26), (27), (28), (33), and (48)(partial), Sanibel City Code.
[57] Section 126-1561(16) and Section 126-1590(p), Sanibel City Code.

The motion carried.

Consideration, by City Council, of a development permit application submitted for the construction of a new 149 feet, above ground level, monopole design telecommunication tower with attached antenna arrays and providing a collocation sharing capacity for 2 additional telecommunications service providers. The proposed telecommunication support structure includes an equipment shelter to house a Base Transceiver Station (BTS), connected via cables to the antenna arrays, an emergency power generator and a 25' X 75' fenced-in area to contain the tower and ancillary equipment installed on City-owned land located at the Donax Street Wastewater Reclamation Facility, at 630 Donax Street, a telecommunications tolerant site. This request is to be processed under the provisions of Land Development Code Sections 126-1561 Application Requirements and 78-7, City Exempt standard. The subject application is filed by Laura B. Belflower Attorney, on behalf of Verizon Wireless Personal Communications LP, d/b/a Verizon Wireless

Staff Report – Verizon Wireless Personal Communications

RESOLUTION 10-123 APPROVING THE CONSTRUCTION OF A 149 FOOT MONOPOLE ABOVE GROUND LEVEL (AGL) TELECOMMUNICATIONS TOWER, TO ATTACH ANTENNAS TO THE MONOPOLE, CONSTRUCT EQUIPMENT SHELTER TO HOUSE THE BASE TRANSCEIVER STATION (BTS), VIA CABLES TO CONNECT THE BTS TO THE ANTENNA AND TO FENCE IN AN AREA 25' X 75' TO CONTAIN THE EQUIPMENT ON CITY-OWNED LAND AT THE DONAX STREET WASTEWATER RECLAMATION FACILITY, AT 630 DONAX STREET IN THE CITY OF SANIBEL; THE REQUEST IS BEING PROCESSED UNDER THE PROVISION OF LAND DEVELOPMENT CODE SECTION 78-7, CITY EXEMPTED; THE APPLICATION IS NUMBERED 10-5524 AND FILED ON BEHALF OF VERIZON WIRELESS PERSONAL COMMUNICATIONS LP, d/b/a VERIZON WIRELESS; AND PROVIDING AN EFFECTIVE DATE

Ms. Zimomra read the title of the subject matter and the Resolution 10-123.

Mr. Cuyler explained the following:

- Quasi-judicial proceeding
- City Clerk would swear in anyone giving evidence
- Ex-parte disclosure from City Council (indication of any conversation or influence from outside sources)
- Standard of review was whether there was competent substantial evidence for or against the applicant
- Purpose of today's hearing
    - Not to determine whether location was appropriate (made over 10 years ago) through the telecommunications ordinance
    - To hold a quasi-judicial hearing on whether the applicant has met requirements of the code
    - Hear from staff and the applicant representative
    - Hear public comment

Pamela Smith, City Clerk issued the Oath.

Jerry Muench, resident
Bruce Rogers,
Rich Cancero
Vanessa Addleson
Dr. Michael Darishson
Gail Greenwood
Jim Greenwood
Laura belfowuer
Larkin Hammond
Mark Hammond
Mark Bash
John Morris
Mark Esposito
Gloria Krekel
Susan Falt
John LaGorce
Jim Jordan

Mr. Jimmy Jordan, Planning Director employed 25 years gave a brief PowerPoint presentation and provided the following information:

- 149 foot monopole
- 3 service providers
- Construct basic shelter equipment
- Base transceiver station
- Submitted Planning Staff report
- Proposed plan – Exhibit A
- Telecommunication device – Exhibit B
- Compliance statement – Exhibit C
- Map of existing facilities – Exhibit D
- Adoption of ordinance – Council found the legislation consistent with the Sanibel plan
- Staff reviewed the applications regarding legislation
- Attached 36 conditions
- Final engineer drawings not submitted to staff to date - r
- Additional certification required including radiation exposure not a threat in accordance with Federal Communication Allowances and meet the minimum requirements as established by FACC

Mr. Cuyler noted that the City would proffer that Mr. Jordan was expert in the Sanibel Land Code and Land Use applications.

Laura Belflower, Attorney and Land Planner for Verizon gave the following testimony:

- 27 years of experience in land planning and land law
- Familiar with City code
- Helped to draft 50 telecommunication ordinances throughout Florida
- Taken 500 applications throughout the application process throughout Florida
- Tower permitted use at the Donax Plant as a tower tolerate location
- Submitted detailed application
- Ask that entire application be made part of the Record
- Application complies with code requirements
- Request approval application
- Ask for review of request to not use a flush mount due to the technology need of 3 and 4g as required in the code

- Each carrier would need 2 heights and any future carrier would need to build another tower
- Proposed T-arm brackets would extend 2 feet away from the pole rather than 3 feet
- Photos passed to City Council and staff showing brackets and antenna on proposed tower
- Antennae would be horizontal
- More carriers could use tower with T-arms
- Using flush mount would allow only 3 carriers
- In agreement with staff conditions
- Adjustments would be needed when decision made

Mr. Cuyler stated that there was no requirement for Council to take a formal motion when additional information was submitted.

Public Comment
Vanessa Addleson spoke against placement of the telecommunications tower at the Donax Plant.

Dr. Michael Darishson asked Mr. Jordan to repeat his statements regarding radiation.

Mr. Jordan repeated that the applicant must certify that the non-iodizing electromatic radiation and radio frequency emission levels comply with the federal communications regulations.

Dr. Darishson, retired Oncologist spoke to radiation damage, increased cell phone usage, and increased brain tumors. He further stated no one knows the extent of radiation once exposed. He also spoke against the proposed site.

Mr. Cuyler spoke to the federal and state legislation in the past was more pervasive and local control less. He stated that even the radiation point was well taken, but the decision could not be made on the radiation premise. He cautioned Council on making a decision regarding radiation exposure and denying on that premise.

Jim Greenwood asked how Council could adopt the resolution if the Verizon application was not complete? He further spoke to any expected revenues from the proposed tower, why this site and the visual impact considered, population density location, lighting requirements and impacts, was there any nesting gopher tortoise impact, emergency generator impact, how would vegetation hide a 149 feet town, residents have not had the opportunity to review photos given to Council by Verizon. He further asked the item be delayed for 60 days.

Mr. Cuyler spoke to facts with regarding the financial considerations as follows:

- Application fee for applicant
- Subsequent lease with City
- Ordinance requires market rate lease payment
- Why this site – series of hearings in 1998/99 for sites – City-owned site
- Lighting forbidden on tower
- Lighting ground level
- Code requirements for base equipment vegetation
- Council packet on the City's website

Mr. Jordan stated that there would be a mandatory generator exercise, but could impose noise limitations of exercise time.

Gail Greenwood spoke to her disapproval of not receiving any notification even though not required by the code. She further spoke against the tower placement and asked for an extension. She mentioned receiving telecommunications service in Colorado from a tower 26 miles away. She also asked the City to bring in an expert to review the proposal.

Frank Esposito spoke to not understanding why the year 1996 was always alluded to.

Mr. Cuyler stated that the telecommunications ordinance was adopted in 1999 and things had changed because it was more difficult for municipalities and their ability to control locations of cell towers. .

Larkin Hammond stated she uses Verizon and with the purchase of a booster has no dropped calls. She understood that Verizon wanted to sell space to co-locator leasees.

Mr. Cuyler explained that the City would receive 50% of any lease payments from co-locators.

John Morris spoke to condition 28 on page 12 of the Staff report and read that there would be a screening. He explained that many towers are made to look like items other than a telecommunications tower by camouflaging. He emailed said camouflaging to City Council.

Mark Hammond provided photos of cell towers disguised, as well as an aerial view of the proposed tower and asked to move the tower further away from homes. He spoke to adequate cover could be made if the tower was 50-foot or 90-foot level, but would not allow co-location.

Jerry Muench spoke to a proposed financial problem if camper sites were not rented due to the tower placement. He asked about safety during a hurricane.

Susan Salts asked why the Donax Plant site was chosen.

Mr. Cuyler stated the provider by ordinance had the opportunity to first look at City owned sites and the why did the City chose the Donax site; Council had various extensive hearings for appropriateness.

Bruce Rogers asked that Verizon be required to install the antennas as required by the code as they did on the Wulfert tower. He further stated the rationale to use different antennas was not provided and the ordinance stated that providers must demonstrate that the crossed polarized antennae would not provide service. He further spoke to an analysis completed and the conclusion was that cross-polarized antennas would provide adequate service.

John La Gorce spoke to the history of federal legislation and approved Sanibel sites,

Mark Hammond spoke to possible FAA requirements and tower should be lighted if under 200 feet and what response.

Laura Belflower spoke to the following:

- Verizon would prefer to go further east, but the proposed site was as far east as possible
- FAA indications was the tower would not need to be lighted, but included as a condition in case FAA requirements change
- Over 200 feet and near an airport, FAA requires lighting with dual lighting white light during the day & red lighting at night
- Emergency generator – not anticipated using unless necessary and could set testing cycling during daytime
- Not aware of technology allowing telecommunication coverage with a tower 26 miles away
- Vegetation on Sanibel interferes with the signal
- Ordinance adopted camouflaged towers barely known, the pine tree tower was an option – wind loading issue and the tower base would be wider
- Staff advised pipes and equipment on property and only placement area
- Height question – 95 feet would be at best for 4G and most carriers could not function at 95 feet due to the angle of vegetation
- Wulfert tower site full and Verizon could not operate at 95 feet
- Flush mount antennas would work with 2 heights and limits co-location opportunities

- Approximately 1 to 2 trips per month per carrier to tower site once built
- Facility designed with wind loading requirements and with top portion bending to fall within the Donax Plant site

Mr. Cuyler asked for ex parte disclosure other than staff briefing

Mayor Ruane	None
Vice Mayor Denham	None
Councilman Harrity	None
Councilman Jennings	Discussion with one resident
Councilman Pappas	Absent - Excused

Council recessed at 11:11 a.m.

Council reconvened at 11:25 a.m.

Discussion ensued regarding other telecommunication sites, any other sites further east, Mr. Jordan answered no, 10 plus years since locations reviewed and was it to late to review sites, Mr. Cuyler stated that there was an existing ordinance under which an application was made and if Council wants to go through the process and re-vamp the ordinance, he further stated the existing ordinance establishes sites and requirements, application made under the current ordinance and could not push the applicant to go to another site, the ordinance allows the applicant to choose the tolerate site for their purposes, must consider this site under the existing ordinance and submitted application, applicant encouraged to go to a City-owned sites, Wulfert – taken, Donax, City Public Works maintenance yard, AT& T at Opre Avenue, ordinance would not preclude putting a tower at Public Works, Mr. Cuyler stated it would not preclude, but ordinance allows applicant to chose the site, application made for the Donax site under the existing ordinance, can not make the decision that the Donax site was inappropriate, similar to a zoning application under an existing ordinance, need technical advice that 95 feet would not work, Mr. Cuyler stated the ordinance promotes co-location on towers, policy decision was providing the number of co-locators on a monopole, want to build one tower with a number of co-locators or numerous towers, does tower meet City purpose, camouflaging essential, Mr. Jordan, Planning Director stated the code allows for camouflaging, must consider the ordinance and requirements, better to have one tower with multiple providers rather than multiple smaller towers, 20 years from now who knows what communications requirements will be, City needs to look 20 years in the future for needs, requirements today require the application meets the existing code, today Council required to decide if the application meets the Code, why can't the tower be put on the west end of the Donax property, Mr. Jordan answered that staff advised the west end had existing facilities, such as conduit, pipes and connections and the east end not developed, would sit within an open retention pond on site and elevated not to interfere with retention area, does not go before the Planning Commission, Mr. Cuyler stated the ordinance allows these types of items to go to City Council, need height to have co-locators, application meets the code with flush mounts and camouflaging, Council's decision was to find the application demonstrates it meets the code, how could Council say no, Mr. Cuyler stated that staff was not taking a position, and unusual that there was an existing ordinance that helps to make the decision and the Donax site was an approved location, staff report accepts the application meets the code, would Verizon be enticed to look at the Lighthouse property, Mr. Cuyler stated the Lighthouse property was not an excepted site and the application was for the Donax property, was 149 feet allowed in the ordinance, Mr. Jordan answered that 149 feet meet the code, equipment safety, Mr. Jordan stated that all equipment and wind loads would need to be certified by a structural engineer, radiation emissions would be certified as to what was required by the FCC, Mayor Ruane asked to abstain due to past disease and would like to have all Council present for a decision.

Mayor Ruane moved, seconded by Vice Mayor Denham, direct staff to report back on the following property site location, height, lighting, appearance, hurricane issues, medical certification regarding radiation and bring back on February 01 at 9:15 a.m.

Discussion ensued regarding additional thoughts from residents, must follow code, and the need for better cell phone communications.

The motion carried.

Ms. Zimomra asked for authorization to utilize funds over the next 2 months to confer with experts.

Mayor Ruane moved, seconded by Vice Mayor Denham, to direct staff to use funds in order to confer with experts for the telecommunications tower.

The motion carried.

CONSENT AGENDA

c. **RESOLUTION 10-118 APPROVING BUDGET AMENDMENT/TRANSFER NO. 2011-005 AND PROVIDING AN EFFECTIVE DATE** (To budget and appropriate $10,634 to reimburse Sanibel Marina for the City's portion ($15,000 less fines and legal expenses) of dredging the entrance to the Shell Harbor canals in 2007. This budget amendment does not increase or decrease the FY11 budget)

i. **RESOLUTION 10-117 AMENDING THE SPECIAL EVENTS SCHEDULE OF FEES FOR THE CITY OF SANIBEL WHICH ESTABLISHES FEES FOR RENTAL OF VARIOUS EQUIPMENT FROM THE CITY AND RENTAL FEES FOR CITY FACILITIES INCLUDING COMMUNITY PARK AND BOWMAN'S BEACH PARK; AND PROVIDING AN EFFECTIVE DATE**

j. **RESOLUTION 10-120 ACCEPTING WASTEWATER COLLECTION AND TRANSMISSION SYSTEM EASEMENTS FROM SANIBEL PROPERTY OWNERS FOR THE SANIBEL SEWER SYSTEM EXPANSION PROJECT, PHASE 4; AUTHORIZING THE CITY MANAGER TO RECORD SAME IN THE PUBLIC RECORDS OF LEE COUNTY, FLORIDA; AND PROVIDING AN EFFECTIVE DATE**

k. **RESOLUTION 10-122 ACCEPTING A SHARED USE PATH AND BIKE LANE EASEMENT FROM ROCHESTER RESORTS, INC., FOR THE SANIBEL CAPTIVA ROAD SHARED USE PATH EXTENSION FROM PINE AVENUE TO BLIND PASS BRIDGE; AUTHORIZING THE CITY MANAGER TO RECORD SAME IN THE OFFICIAL RECORDS OF LEE COUNTY, FLORIDA: AND PROVIDING AN EFFECTIVE DATE**

Ms. Zimomra read the title s of Resolutions 10-118, 10-117, 10-120 and 10-122

Vice Mayor Denham moved, seconded by Mayor Ruane, to adopt Resolutions 10-118, 10-117, 10-120 and 10-122.

Public Comment
None

The motion carried

a. Approval of minutes – September 11, 2010 First Budget Hearing, November 02, 2010 Regular Meeting and November 16, 2010 Executive Session

CITY OF SANIBEL

RESOLUTION 10-123

A RESOLUTION APPROVING THE CONSTRUCTION OF A 149 FOOT MONOPOLE ABOVE GROUND LEVEL (AGL) TELECOMMUNICATIONS TOWER, TO ATTACH ANTENNAS TO THE MONOPOLE, CONSTRUCT EQUIPMENT SHELTER TO HOUSE THE BASE TRANSCEIVER STATION (BTS), VIA CABLES TO CONNECT THE BTS TO THE ANTENNA AND TO FENCE IN AN AREA 25' X 75' TO CONTAIN THE EQUIPMENT ON CITY-OWNED LAND AT THE DONAX STREET WASTEWATER RECLAMATION FACILITY, AT 630 DONAX STREET IN THE CITY OF SANIBEL; THE REQUEST IS BEING PROCESSED UNDER THE PROVISION OF LAND DEVELOPMENT CODE SECTION 78-7, CITY EXEMPTED; THE APPLICATION IS NUMBERED 10-5524 AND FILED ON BEHALF OF VERIZON WIRELESS PERSONAL COMMUNICATIONS LP, d/b/a VERIZON WIRELESS; AND PROVIDING AN EFFECTIVE DATE

WHEREAS, Application 10-5524 was filed by Laura B. Belflower, Attorney, on behalf of Verizon Wireless Personal Communications LP, d/b/a Verizon Wireless for construction of a 149 foot monopole and associated equipment on City-owned land at 630 Donax Street; and

WHEREAS, the City Council held a public hearing on December 7, 2010 to consider such Application; and

WHEREAS, such public hearing was appropriately and legally noticed and at such public hearing the City Council took and considered such sworn testimony, evidence and/or arguments as was presented by or on behalf of the Applicant, and all interested parties appearing at and participating in such public hearing; and

WHEREAS, at the conclusion of the presentation of sworn testimony, evidence and/or arguments at the public hearing on December 7, 2010, the City Council closed the public hearing;

NOW, THEREFORE, BE IT RESOLVED by the City Council of the City of Sanibel, Florida, that:

SECTION l. FINDINGS.

The City Council hereby finds as follows:

(a) The Application was filed and processed in accordance with applicable City ordinances, rules and regulations, including Article XVII Telecommunications Devices, and Section 78-7, City exempted, of the Sanibel Code of Ordinances.

(b) All persons wishing to provide sworn testimony, evidence and/or arguments with respect to the Application were provided an opportunity to do so during the public hearing process.

(c) Based upon the sworn testimony and evidence presented to the City Council and set forth in the record, the City Council finds that the Application meets all required criteria in the Sanibel Code of Ordinances relating to the location and development of the telecommunication facility applied for in the Application, and meets all other requirements and criteria of the City necessary for approval of the Application. The City Council further finds that there was competent substantial evidence provided at the hearing to support the approval of the Application and telecommunication tower construction.

SECTION 2. APPROVAL OF APPLICATION.

The Application filed by Laura B. Bellflower Attorney, on behalf of Verizon Wireless Personal Communications LP, d/b/a Verizon Wireless, is hereby approved with all conditions set forth in the Planning Staff Report and recommendation.

SECTION 3. Effective date.

This resolution shall take effect immediately upon adoption.

DULY PASSED AND ENACTED by the Council of the City of Sanibel, Florida, this 7th day of December, 2010.

AUTHENTICATION:

Kevin Ruane, Mayor	Pamela Smith, City Clerk

APPROVED AS TO FORM:_____ _____
Kenneth B. Cuyler, City Attorney Date

Vote of Council Members:

Ruane _____
Denham _____
Harrity _____
Jennings _____
Pappas _____

Date Filed with City Clerk: _____

City of Sanibel

Planning Department
STAFF REPORT

City Council Meeting:	**December 7, 2010**
City Council Agenda Item:	**8a**
Application Number:	**10-5524**
Applicant Name:	**Verizon Wireless**

Consideration, by City Council, of a development permit application submitted for the construction of a new 149 feet, above ground level, monopole design telecommunication tower with attached antenna arrays and providing a collocation sharing capacity for 2 additional telecommunications service providers. The proposed telecommunications support structure includes an equipment shelter to house a Base Transceiver Station (BTS), connected via cables to the antenna arrays, an emergency power generator and a 25' X 75' fenced-in area to contain the tower and ancillary equipment installed on City-owned land located at the Donax Street Wastewater Reclamation Facility, at 630 Donax Street, a telecommunications tolerant site. This request is to be processed under the provisions of Land Development Code Sections 126-1561 Application Requirements and 78-7, City Exempt standard. **The subject application is filed by Laura B. Belflower Attorney, on behalf of Verizon Wireless Personal Communications LP, d/b/a Verizon Wireless.**

Proposal

For City Council approval, Verizon Wireless has submitted a request to lease a 25' X 75' area and a development permit application to construct a new telecommunications tower at the Donax Street Wastewater Reclamation Facility. Verizon proposes to enclose the 25' X 75' leased area by fence, and within this area construct a 149' above ground level monopole designed support mount (with designed sharing capacity for two additional wireless providers), attach side mounted telecommunications antenna arrays to the monopole support structure, construct a flood compliant elevated equipment shelter near the base of the monopole support structure to house the Base Transceiver Station, and connect the Base Transceiver Station to the antenna arrays via cables.

Included with this report, **as Attachment "A"**, are a set of the proposed plans which depict the new antenna support structure. The plans submitted for this review are identified as Verizon Wireless, Donax Water Reclamation Facility, and Tower Site No. 68996, with a last revision date of June 07, 2010, prepared by Robert Jerry Lara, Registered Florida Architect with Morrison Hershfield Corporation.

In addition, simulations pictures have also been prepared and submitted, as part of the application request, to depict the visual impact of the proposed device and to illustrate how the telecommunications device will appear from four public view points. The simulation photos are included with this report as **Attachment "B"**.

The request currently before City Council is solely for the development permit application to install the proposed telecommunications tower and its ancillary equipment. The required lease agreement will need to be considered separately by Council should the development permit application for the tower's construction receive approval.

Background

Verizon's purpose for filing this application is to improve service for its wireless customers on the east end of the Island. Verizon currently has telecommunications antennas mounted on the lattice support tower located in Sanibel Gardens, behind the Olde Sanibel Shoppes, and on a monopole support tower they lease at the Wulfert Road Wastewater Treatment Plant facility.

The Sanibel Wireless Telecommunications Master Plan was adopted in 1998 as LDC Article XVII, Division 2, Sections 126-1531 – 126-1539, and contains the following paragraph:

> **It is the City's policy to encourage any new, tall (up to 149' above ground level) antenna support structures to located on the City-owned parcels identified as areas (1)-(4) in subsection (b) of this section. In order to encourage providers to look first to these City-owned areas, the City will establish an expedited permitting process and make the areas available at rates consistent with prevailing market conditions. If, for technological reasons, the "telecommunications tolerant" areas of the city are unacceptable to a service provider, then an alternate permitting process should be followed."**

The Wastewater Reclamation Facility, at 630 Donax Street, is one of four city-owned areas referred to in the above paragraph as being a "telecommunications tolerant" area.

Land Development Code Section 126-1512. Purpose and Intent, states, in part, that:

> This article is intended to bring the city's land development code into compliance with the Telecommunications Act of 1996, which was codified as Public Law 104-104 and any other lawful regulation passed pursuant to and in compliance with the act. It is intended to provide city residents, businesses, visitors and public service agencies with access to the latest telecommunications services and technology within the context of and in a manner consistent with the Sanibel Plan.

Analysis

Land Development Code Section 126-1587, Telecommunications Devices as Principal uses, states:

It is the city's policy to encourage use of designated city-owned land and facilities for the siting and location of telecommunications facilities as principal uses, especially when the height exceeds plus 45 feet zero inches NGVD.

The proposed new construction of a monopole design support structure up to a maximum height of 149 feet above ground level (AGL) is permitted at the Donax Wastewater Reclamation Facility site as a primary intended use.

Land Development Code Section 126-1560 (d), states that, "An application to construct a telecommunication device on city-owned parcels shall be processed under the provisions of Section 78-7 pertaining to the city's exemption from specific requirements of the Land Development Code."

Land Development Code Section 78-7 reads as follows:

The city is exempted from the specific requirements of this land development code. Development regulations, conditions, and limitations for any development initiated by the city shall be determined, on a case-by-case basis, by the city council, but no such development shall be inconsistent with the Sanibel Plan.

With the 1999 adoption of Land Development Code Article XVII, Telecommunications Devices, City Council found this article to be consistent with the Sanibel Plan and in compliance with the Telecommunications Act of 1996.

Part I. **Land Development Code standards applicable to the development permit application review and approval**

In consideration of this request, Verizon Wireless must demonstrate to the complete satisfaction of the City Council that the Land Development Code requirements specific to telecommunications facilities have been completely satisfied prior to Council approval. Much of the information required by the Code has been provided, with the exception of several information requirements that the applicant has indicated are exempt or no longer applicable per Florida Statutes adopted after the 1998 adoption of Sanibel Wireless Telecommunications Master Plan.

The applicant has prepared a narrative titled "Application Compliance Statement" that is included with the report as **Attachment "C"**. This narrative explains how this particular request meets the applicable Land Development Code requirements for authorizing the development of the proposed telecommunication facility.

The applicant has indicated the antenna arrays will be a T-arm design as opposed to a close mounted cross polarized antenna array (similar to the Wulfert Wastewater Plant tower). The basis for this decision being that a close/flush mounted antenna array does not allow sufficient room for meeting all of their proposed designed services and limits the number of other potential co-locators on the tower. **Further evidence in support of this position, not to utilize close mounted cross polarized antenna arrays, will need to be provided by the applicant and confirmed by an independent telecommunications expert.**

Land Development Code Section. 126-1561. Application requirements, identifies fifty-five (55) items of information that must accompany all permit requests submitted for the installation of telecommunications devices and facilities, unless such information is deemed inappropriate or unnecessary for a determination by the City due to the nature of the telecommunications facility being proposed.

The following items of information referenced under this section of the code have been determined essential for the consideration of the subject development permit application.

(10) A statement of intent that collocators will be permitted in cases where devices are required or proposed to accommodate more than one provider. The positions of anticipated collocator antennas on the mount and the space provided for collocator equipment shelters shall be shown on all site plans and elevations.

(11) Certification by the applicant that, as proposed, the device complies with Federal Communications Commission guidelines for radio frequency emissions. The city reserves the right to require a radio frequency emissions analysis of the proposed device which may include measurement of existing ambient emissions and projected project and cumulative emissions to demonstrate compliance on a cumulative basis with applicable Federal Communications Commission guidelines.

(12) Certification that, as proposed, the device should not cause harmful electrical interference with any city-operated radio frequency devices in existence at the time of the application, and certification that the applicant acknowledges their obligation to take all steps necessary to resolve any interference that actually occurs.

(13) Certification as to compliance with or exemption from any federal or state regulations applicable to the siting.

(14) Certification that the proposed mount complies with regulations administered by the FAA, FCC and any state reviewing authority, or that the mount is exempt from those regulations.

(15) Description of security measures to be taken in the operation of the device.

(19) Applicant shall identify all prospective users of the support structure, not identified above, for which it has either entered into negotiations or agreed to provide space on the support structure. Applicant shall identify the proposed mounting location for each antenna to be utilized by each such prospective user and identify any future capacity for which applicant has been requested to reserve future loading capacity.

(20) Applicant shall identify all additional capacity which would be available for future collocation use at the proposed structure beyond the collocation users identified in subsections (17)--(19) of this section.

(28) If a generator will be used at this site, provide manufacturer, model, specifications, type of fuel, type of fuel storage, and storage tank location and size, and set forth the length of time for which the generation facilities, as proposed, will be capable of providing backup power for all initial and future proposed collocation users at the site. Any collocation users not to be powered by the back-up generation facilities shall be expressly identified as such in the

filing. The applicant shall provide documentation sufficient to demonstrate projected noise levels will comply with the requirements set forth in section 30-61 et seq.

(31) Provide a copy of the FCC authorization under which the proposed facilities, would be operated and provide a brief description of the services to be offered by the proposed facilities including a listing of the specific frequencies which are currently operating and which the proponent proposes to add to this facility.

(34) Provide a copy of the FAA clearance for the structure. The FAA clearance shall include clearance for both the height of the structure as well as the frequencies which are proposed to be added to the structure.

(37) Identify whether any portion of the proposal would be an action requiring an environmental impact statement pursuant to 47 CFR 1.1305, or requiring an environmental assessment pursuant to 47 CFR 1.1307, and, if so, include a copy of the application for FCC approval.

(38) The proponent shall include a certification by a radio frequency engineer, technically qualified and competent to address the issues that the proposed facilities would be in compliance with all RF exposure requirements as required by the FCC. This certification shall identify all existing and proposed operations at the radio site (by frequency, antenna mounting location and effective radiated power). The proponent shall submit a certification by the owner of the structure certifying that all of the facilities in operation and proposed for the site are specifically identified in the foregoing engineer's certification.

(39) Provide FCC type-acceptance number for each proposed transmitter.

(40) The applicant shall include a certification of a radio frequency engineer, qualified to practice before the FCC, that the proposed facilities are not expected to pose any potential interference problem to over-the-air reception devices or other common consumer electronic devices of local residents in proximity to the structure. The proponent shall include a certification by a principal of the proponent that any such actual interference resulting from the operation of the proposed facilities will be resolved by the proponent and, if it cannot be resolved, that the proponent will promptly cease operation of the interfering facilities until such interference can be resolved.

(44) Identify on the map the proposed site, and all facilities within or providing service within the city limits. **(SEE ATTACHMENT "D" OF THIS REPORT)**

(45) The application shall provide a detailed listing of all equipment to be placed at the site or on the existing structure. The application shall include an acknowledgment by a principal of the proponent that any permit issued as a result of the subject filing is expressly limited to the equipment specifically identified therein and that, other than for the maintenance, repair or replacement of such equipment with the same manufacturer and model number, no other equipment shall be added to the site without the receipt of an

additional permit for the addition of any such equipment. Such additional permit shall only be issued in response to an additional filing which contains all information required in this section.

(46) If the proposed facility is intended to provide communications to the public or to emergency personnel, the filing shall include information regarding the ability of the proposed facilities to maintain operation during times of emergency. Specific reference shall be made to any emergency 911 or E 911 call routing capabilities.

(47) Provide manufacturer, model and specifications (mechanical and electrical) of each building or cabinet being proposed herein and describe the purpose of each.

(48) If HVAC is to be used, then information shall be provided with respect to the noise level during operation (specified in decibels) which will be heard at the nearest property boundary.

(51) Where required by the National Environmental Policy Act of 1969 (NEPA), or 47 CFR 1.1305 or 47 CFR 1.1307, applicants shall submit a copy of the environmental impact statement or environmental assessment, as appropriate, prepared for the Federal Communications Commission, including a demonstration of compliance with FCC RF exposure guidelines.

(55) As part of any showing for a new or additional transmitting site, the proponent shall include a demonstration of why it cannot, through the use of antenna combiners or other filters, utilize any existing antennas on an existing transmitting site to provide substantially the same coverage.

Part II. **Other Information Required Per Land Development Code Section 126-1561 Necessary For Review Prior to Approval of the Proposed Lease Agreement**

Of the fifty-five (55) items of information listed under this Section, Staff has deemed the submittal of the following 6 items of information referenced below as being necessary prior to the approval of the lease:

(5) Front, side and rear elevations of the telecommunications device indicating the color and finish, visual screens and enclosures, buffer treatments and lighting, including:

a. Specifications for support structure and mount height and design and including a plan or drawing of cross sections of the structure.

c. Construction plans showing the method of construction and installation and the manufacturer's specifications.

d. Description of the mount's maximum capacity, including the number of antennas and their mounting configurations and positions that it can accommodate for collocation, and taking into consideration radio frequency interference, mast height, and other characteristics, as well as

options to overcome any problems that these considerations may pose to service delivery.

(6) Certification by a registered professional engineer licensed by or permitted to provide certifications in the state, that the device is designed and constructed:

a. To meet the construction standards found in this article;

(16) Description of liability insurance or binding for the device.

(21) Applicant shall submit a full set of engineering drawings, which drawings shall be stamped by a professional engineer licensed in the state, specifying the dimensions of all structural members and mounting facilities to be incorporated into the support structure for all loading identified subsections (17)--(20) of this section, and shall expressly identify each such antenna as having been incorporated into the support structure design. These drawings shall also include the foundation design for the proposed structure. In addition, the PE shall certify compliance with both the then-current EIA/TIA 222 standard as well as the applicable provisions of the city's building code, which includes a 120-mph wind load, as defined by the American Society of Civil Engineers, Publication No. 7 of 1993 (ASCE 7-93), and the 1997 Standard Building Code, or its then-current replacement. Where conflicting standards are set forth in those documents, the more stringent standard shall be utilized in the design.

(22) Applicant shall identify any party or parties which have requested collocation on the facilities but for whom capacity is not designed into the structure as set forth in this section, and shall include a brief explanation as to why that collocation has been disallowed or is not being further considered.

(24) Applicant shall include elevation drawings for all equipment shelters and cabinets proposed for the site. Applicant shall set forth the environmental ratings for all equipment cabinets and specify whether the cabinets meet or exceed Bellcore Specification TR-TSY-000487. For equipment buildings, applicant shall identify all materials used for the shell of the building and set forth the wind loading specifications. Applicant shall specify the exterior finishes and materials for all proposed equipment cabinets and shelters.

Recommended Conditions for the Approval of Development Permit Application No. 10-5524

The Planning Department's review of the Verizon Wireless application concludes that the application substantially complies with LDC standards and requirements. The reason for using the words "substantially complies" is because at this time Verizon has not completed and submitted all required final engineered construction plans and certifications. All final plans will need to be signed and sealed by a Florida Registered Engineer after City Council approval of the land lease and prior to the issuance of a building permit.

Staff recommends that the following conditions, most which have been taken from the standards and requirements of Land Development Code Article XVII. Telecommunications Devices, be attached to the approval of the requested development permit.

1. The tower and all attachments thereto shall be painted the following color: Reflection TWT SW2122, Sherwin Williams or a similar shade of grey that will help, to the extent possible, minimize the visual obtrusiveness of the support structure and its attachments.

2. The monopole shall not be illuminated nor have any lights attached to it unless otherwise required by the FAA. In the event that certain lights are required, by either the FCC or FAA, to be placed on the monopole, such required lights shall be deemed permitted under those circumstances. Verizon Wireless shall provide the City, in writing, with all supporting documentation as evidence of supporting any required lights.

3. All electrical equipment and equipment cabinets shall be elevated to or above the FIRM base flood elevation of AE, Elevation 11 feet, NAVD.

4. In accordance with the preapproval review comments received from the City's Building Official, Harold Law, compliance with the submittal of the following items of information is required:

   a. wind loads shall use exposure C in calculations;
   b. Flood zones shall be shown and addressed;
   c. All elevations shall be in NAVD only; and
   d. All plans shall be signed by Florida Engineer and completed structurally for permitting.

5. A vegetation buffer of sufficient depth and density shall be installed and maintain, in compliance with the visual compatibility standards of Land Development Code Section 126-1598, around the perimeter of the land lease area.

6. In accordance with **Land Development Code Section 126-1589,**
   a. **Artificial lighting** shall be limited to:
      Security lighting for any equipment, buildings, shelters or other on-the-ground ancillary equipment and structures, shall be compliant with the outdoor lighting standards of this land development code. Such lighting shall be manually operated and used only during night maintenance checks or in emergencies.

   b. **Signage**

      i. No signage shall be allowed on any telecommunications facility except as required for public safety purposes, or by the FCC or FAA.

ii. No telecommunications device shall have advertising on it or contain any sign or insignia for the purpose of advertising.

iii. The display of required Federal Communications Commission tower registration information is permitted, using the smallest sign face which meets FCC requirements.

c. **Secure design and safety**

i. All parts of telecommunications facilities shall maintain clearances from any electricity lines and equipment as required by the National Electrical Safety Code (NESC).

ii. Telecommunications equipment shelters shall be of vandal-resistant design or shall be provided with a suitable security barrier.

iii. A controlled access enclosure is required around the base of the mount and equipment shelters of all telecommunications devices as principal uses.

iv. Access to the telecommunications device as a principal use and ground equipment shall be only through a lockable entrance.

7. All sound-emitting devices shall comply with the requirements set forth in Land Development Code Section 30-61 et seq., pertaining to noise and Division 16 Emergency Electric Power Generator.

8. The monopole, including surmounting appurtenances, shall not exceed a height of 149 feet, AGL. Furthermore, the attached antenna arrays shall be flush mounted or mounted as close to the monopole as possible to help minimize any visual obtrusiveness.

9. Foundations for ground-mounted, structure-mounted and utility-pole-mounted telecommunications devices shall not disturb, break or penetrate the aquiclude or clay layer at the bottom of the freshwater lens, permit saltwater intrusion or otherwise endanger the integrity of the freshwater lens. If it is necessary to drive pilings below the level of the aquiclude, such penetration shall be sealed according to the best technology available to avoid saltwater intrusion.

10. All telecommunications devices shall be subject to periodic reinspections.

11. All telecommunications devices shall meet all manufacturers' specifications. Any mount or accessory equipment shall be of noncombustible and corrosive-resistant material. Miscellaneous hardware, such as brackets, turnbuckles, clips and similar equipment subject to rust or corrosion shall be protected with a zinc coating either by galvanizing or sheradizing process after forming, or by use of stainless steel fittings, or by equivalent protective processes. These finishes are selected to guard against corrosion and to protect the elements against electrolytic action due to the use of adjoining dissimilar metals.

12. All telecommunications devices shall be maintained in good condition and in accordance with all the standards of this section. No additions, changes or modifications shall be made to a device unless the addition, change or modification is in conformity with the standards of this section and the land development code. All required permits must also be obtained for additions, changes or modifications.

13. Mounts shall be the narrowest feasible at the horizontal measurement to provide the required stability and loading.

14. Permanent platforms, exclusive of antennas, that serve to increase the visibility of the telecommunications device from off-site are not permitted.

15. All mounts, antennas and surmounting appurtenances, including attachments thereto, shall be of a type, design, color and texture which are the least visually obtrusive structures possible, while accomplishing their intended purpose.

16. At all times each facility shall be insured for liability in an amount of not less than $5,000,000.00. For each facility, the applicant or owner shall provide to the city a bond or other security in an amount sufficient to ensure that the facility is returned to its natural state upon abandonment.

17. All telecommunications devices, including support structures, mounts and surmounting appurtenances shall be designed and constructed to meet the following codes and standards:

    (a) The Sanibel Building Code, which includes a 120-mph wind load, as defined by the American Society of Civil Engineers, Publication No. 7 of 1993 (ASCE 7-93), and the 1997 Standard Building Code, or its then current replacement.

    (b) FAA Advisory Circular # AC70.7460-1H.

    (c) Electronics Industries Association (EIA) Standards, the then-current revision of EIA/TIA 222.

    (d) Wind load analysis and basic wind speed shall comply with the most current EIA standards and local building codes. Where standards differ, the more stringent code shall be used. In no case will the basic wind speed be less than 120 miles per hour.

18. Ground-mounted telecommunications facilities shall be accessible by service vehicles.

19. All new ground-mounted facilities shall be designed and constructed to accommodate shared use when technically feasible and practical. The owner of the telecommunications mount shall, as an ongoing condition of the required development permit, respond to requests for other service providers, in a timely manner, as to the availability of space on the telecommunications mount.

20. The design and construction of telecommunications support structures for collocation shall assume that each additional service provider will have loading requirements comparable to the original proponent. The owner of the device must provide reasonable leasing opportunities to other service providers to use the device.

21. A reasonable pro rata charge may be made for shared use, or rental rates consistent with prevailing market conditions may be charged, consistent with an appropriate sharing of construction, financing and maintenance costs. Fees may also be charged for any structural or radio frequency changes necessitated by such shared use. Such sharing shall be a condition of approval, if approval is granted.

22. For the land lease consideration, the applicant shall describe what range of charges is reasonably expected to be assessed against shared users. In addition, the applicant shall base charges on generally accepted accounting principles and shall explain the elements included in the charge.

23. The applicant shall quantify the additional mount capacity proposed, including the number and types of antenna. The applicant shall also describe any limitations on the ability of the mount to accommodate other users, such as radio frequency interference, mast height, frequency or other characteristics. Verizon's or the tower manufacture's engineer shall certify the number of additional mounts that the monopole can carry.

24. All support structures and attachments thereto shall present the slimmest profile possible, as seen from public views, by utilizing facilities/devices and construction materials and techniques with the smallest feasible diameter, diagonal or horizontal measurement.

25. In keeping with the Sanibel Plan, including the vision statement, and in efforts to minimize visual impact, carriers shall propose the slimmest profile possible for their transmitting facilities. Carriers shall be required to utilize cross-polarized antennas for purposes of diversity, as opposed to the use of additional antennas for space diversity, unless a carrier includes an engineering demonstration showing that cross-polarized antennas would not provide adequate coverage from the proposed transmitting location. Such showing shall also include a map which depicts the precise areas where coverage would not be satisfactory from a cross-polarized antenna configuration, as compared to a space diversity configuration.

26. To the greatest feasible extent, equipment shelters associated with ground-mounted or utility-pole-mounted telecommunications facilities shall be concealed from public view or shall be buffered to be compatible with surrounding land uses.

27. The telecommunications device, supporting structures and accessory equipment:

    (a) Shall not be made of materials which are bright, shiny, garish or highly reflective of light; and

(b) Shall be screened by the use of landscaping or architectural features which harmonize with the elements and characteristics of the parcel on which it is located and adjacent properties.

28. Mounts, antennas, towers, equipment shelters, support structures, storage facilities, operations buildings and auxiliary structures shall be screened from public view to the greatest extent feasible

29. A vegetation buffer shall be installed or augmented to comply with this subsection as determined by the City Manager.

30. Prior to receiving a completion certificate, the applicant shall certify in writing that the telecommunications device complies with all current Federal Communications Commission regulations for nonionizing electromagnetic radiation and radio frequency emission levels.

31. No telecommunications device shall transmit signal strengths in excess of those allowed under the current federal regulations.

32. The applicant shall certify in writing that the device complies with all current Federal Aviation Administration regulations and with Southwest Florida International Airport Authority requirements.

33. Documentation must be submitted that the applicant possesses all required licenses required by federal, state, or local agencies to operate, own, or install such a device.

34. The applicant shall furnish to the City the following certifications prior to the issuance of a completion certificate or a Certificate of Occupancy.

35. Prior to the issuance of the completion certificate required by section 82-362, or a certificate of occupancy, the applicant for a telecommunications device, as a principal use, shall furnish the city with the following certifications:

    (a) Radio frequency (RF) emissions. Each applicant shall certify that it is in compliance with the Federal Communications Commission's RF emissions rules as they relate to human exposure. Such certificate shall be furnished with respect to both new devices and each proposed addition to a radio site. The certification shall be furnished by an individual with demonstrated competence in the field of RF emissions.

    (b) Environmental rules. Each applicant shall certify that it is in compliance with the FCC's environmental rules, as well as the Florida Department of Environmental Protection Agency requirements. The certification shall be furnished by an individual with demonstrated competence in the field of FCC's environmental rules.

    (c) FCC/FAA marking and lighting requirements. Each applicant shall certify that the construction and operation of its proposed device is, and will

remain, in compliance with part 17 of the FCC's rules and satisfies the FAA's rules and regulations. The certification shall be furnished by an individual with demonstrated competence in the field of FCC/FAA marking and lighting requirements.

(d) Certification of compliance with all applicable standards and codes. The applicant shall certify that the proposed use, engineering design, manufacture, construction and safety are in accordance with the latest revision of industry codes, design guides, and applicable standards in effect at the time of issuance of the permit. In addition, the applicant shall certify that all applicable federal, state, and local codes and standards have been observed, and that the devices have been installed in accordance with the approved plans.

36. With regards to the land lease the following requirements shall apply to this application:

(a) Telecommunications devices, sites or permits may not be sold, transferred or assigned until the assignee obtains approval from the city, except in conjunction with the sale or transfer of the underlying FCC license, provided written notice is given to the city within 30 days of consummating such transaction. When prior city approval is required, such city approval shall be granted upon determination by the assignee that it has the capability of complying with the ongoing obligations of this land development code.

(b) Sublease of a telecommunications device shall not be entered into by any provider until the sublessee has obtained a development permit from the city for the telecommunications device, or the sublease is conditioned on sublessees' receipt of a development permit, prior to commencing any construction.

(c) Potential providers may not claim that a permit should be issued by the city for an assigned or subleased telecommunications device on the basis of any expense incurred in relation to the device.

37. The city may inspect any telecommunications device that is a principal use to ensure that the mount and its antennas and equipment shelters are being maintained in compliance with the standards of this section. Upon a determination that a telecommunication device does not comply with the standards of this section, or constitutes a danger to persons or property, the owner of the device shall have 30 days to bring the device into compliance.

38. If the use of any telecommunication device, or any portion of a telecommunication device, has been discontinued for a period of 180 consecutive days, the telecommunication device shall be deemed to be abandoned.

Upon a determination of abandonment, the owner or operator of the telecommunications device shall have 90 days within which to:

(a) Reactivate the use of the telecommunications device;

(b) After submitting an application to the city to do so, transfer the telecommunications device to another owner or operator who makes actual use of the device within 45 days following the completion of the transfer; or

(c) Dismantle and remove the telecommunication device, or any unused portion thereof. All costs associated with dismantling and removal of the device shall be borne by the owner or operator of the telecommunications device.

The owner of the abandoned telecommunications device and the owner of the property where the device is located shall be under the duty to remove the device and restore the property to its preexisting condition. If it is not removed within 60 days after notice from the city requiring removal, the City may remove it and restore the property to its preexisting condition. The cost of removal and site restoration shall constitute a lien upon the property.

Any delay by the city in taking action shall not in any way waive the city's right to take action.

Report Attachments

A. Set of plans, consisting of 8 sheets, prepared by Morrison Hershfield showing the proposed Verizon Wireless telecommunication facility
B. Simulation of the proposed telecommunications support monopole structure
C. Applicant's narrative titled "Application Compliance Statement"
D. Map of Verizon's Existing Wireless Facilities within the City of Sanibel

K:\planning\jcj\Files Copied from L Drive August 25, 2008\Staff Report\2010\Verizon's Telecommunications Tower at the City's Donax Wastewater Site.doc

TELECOMMUNICATIONS TOWER PRESENTATION

DONAX RECLAMATION FACILITY

December 7, 2010

Communication Tower at Wulfert

DeLORME

DeLorme Street Atlas USA® 2009

Verizon Wireless Existing Facilities In and Within Five Miles of Sanibel

Data use subject to license

© DeLorme. DeLorme Street Atlas USA® 2009

www.delorme.com

MN (4.8° W)

0 1 2 3 4 5 mi

Data Zoom 10-0

4 Simulation Photo Sites

East View from Lindgren #1

East View from Lindgren #1

View from Nerita St. & Junonia #2

View from Nerita St. & Junonia #2

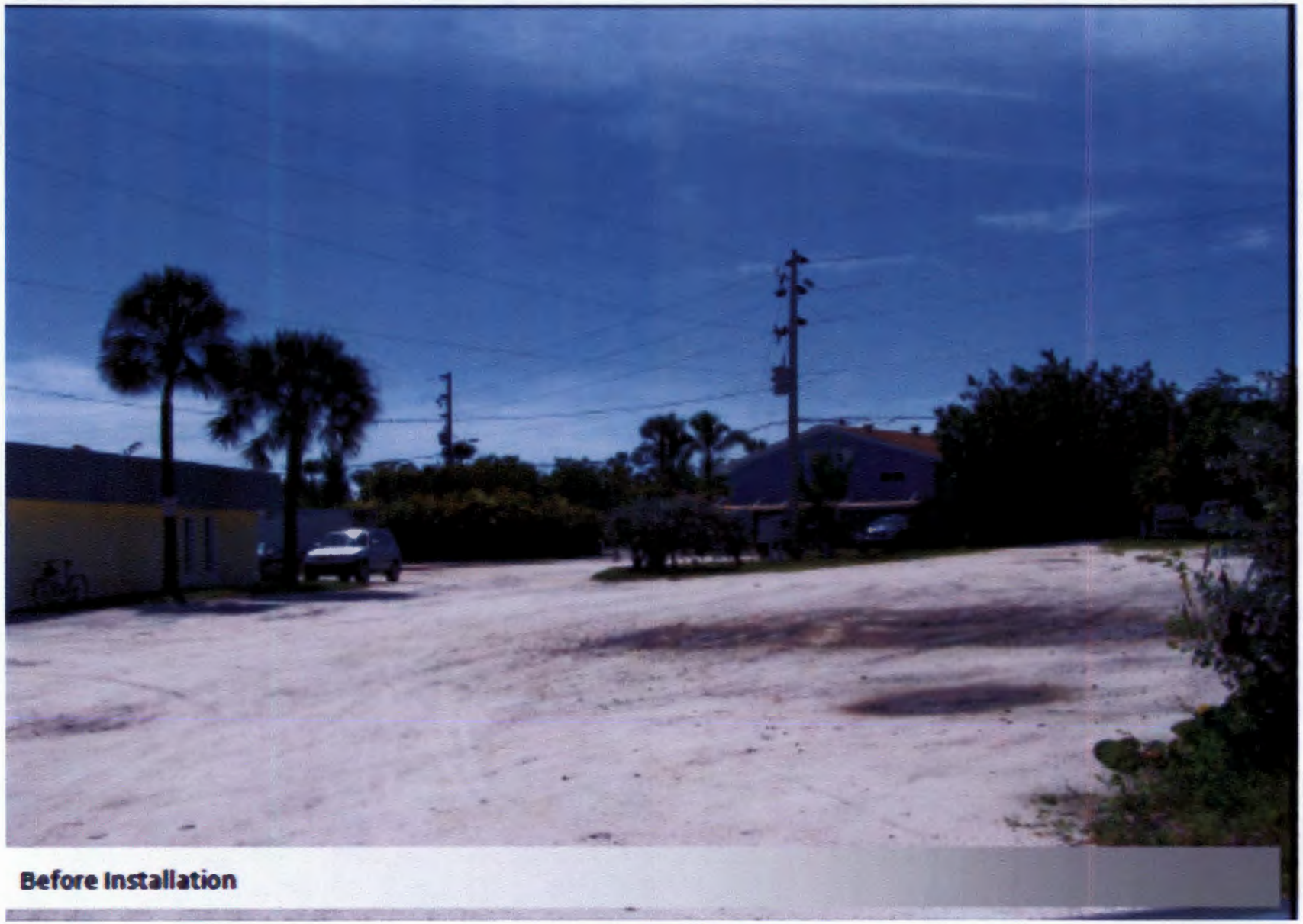

View from North Periwinkle Way #3

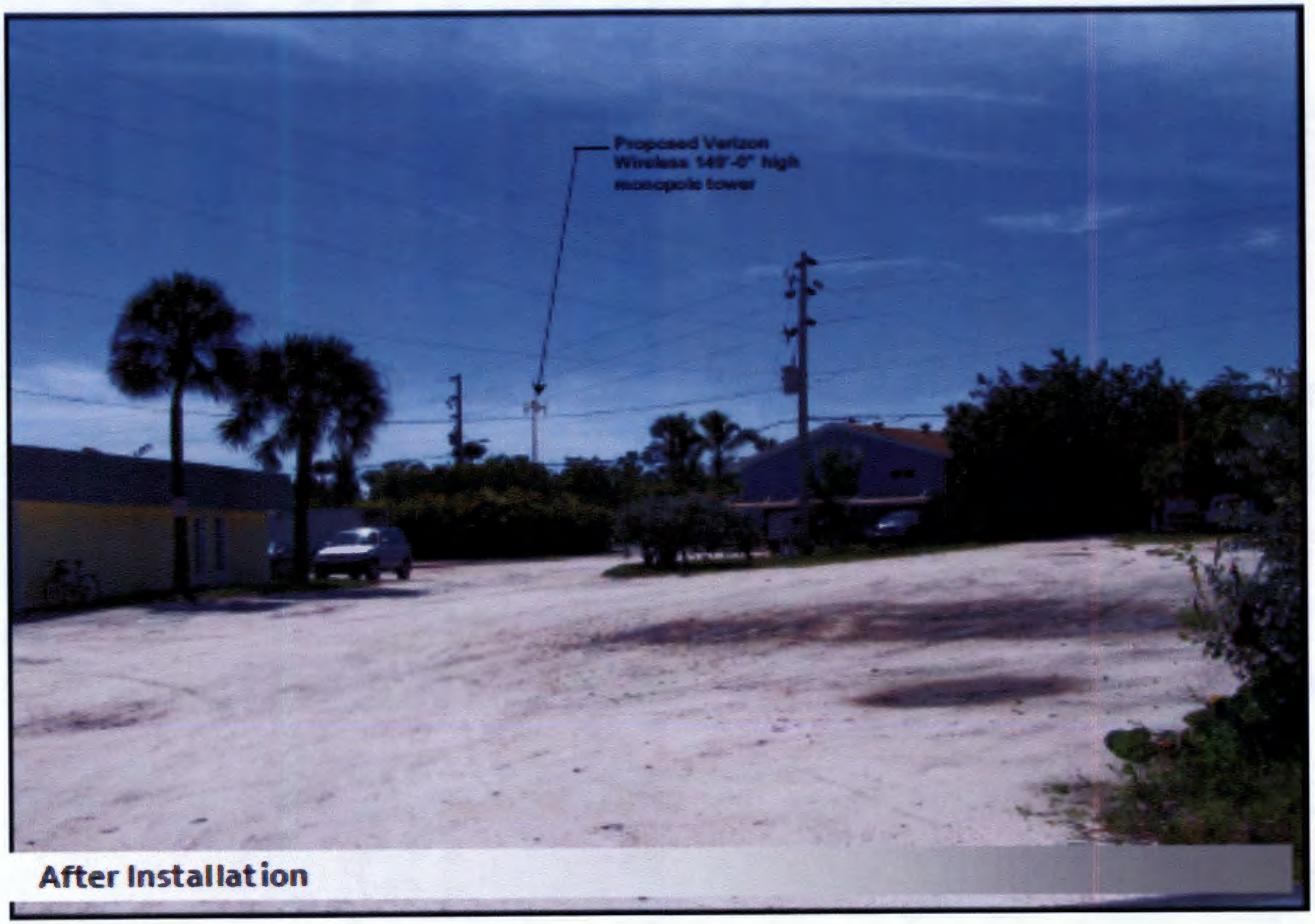

View from North Periwinkle Way #3

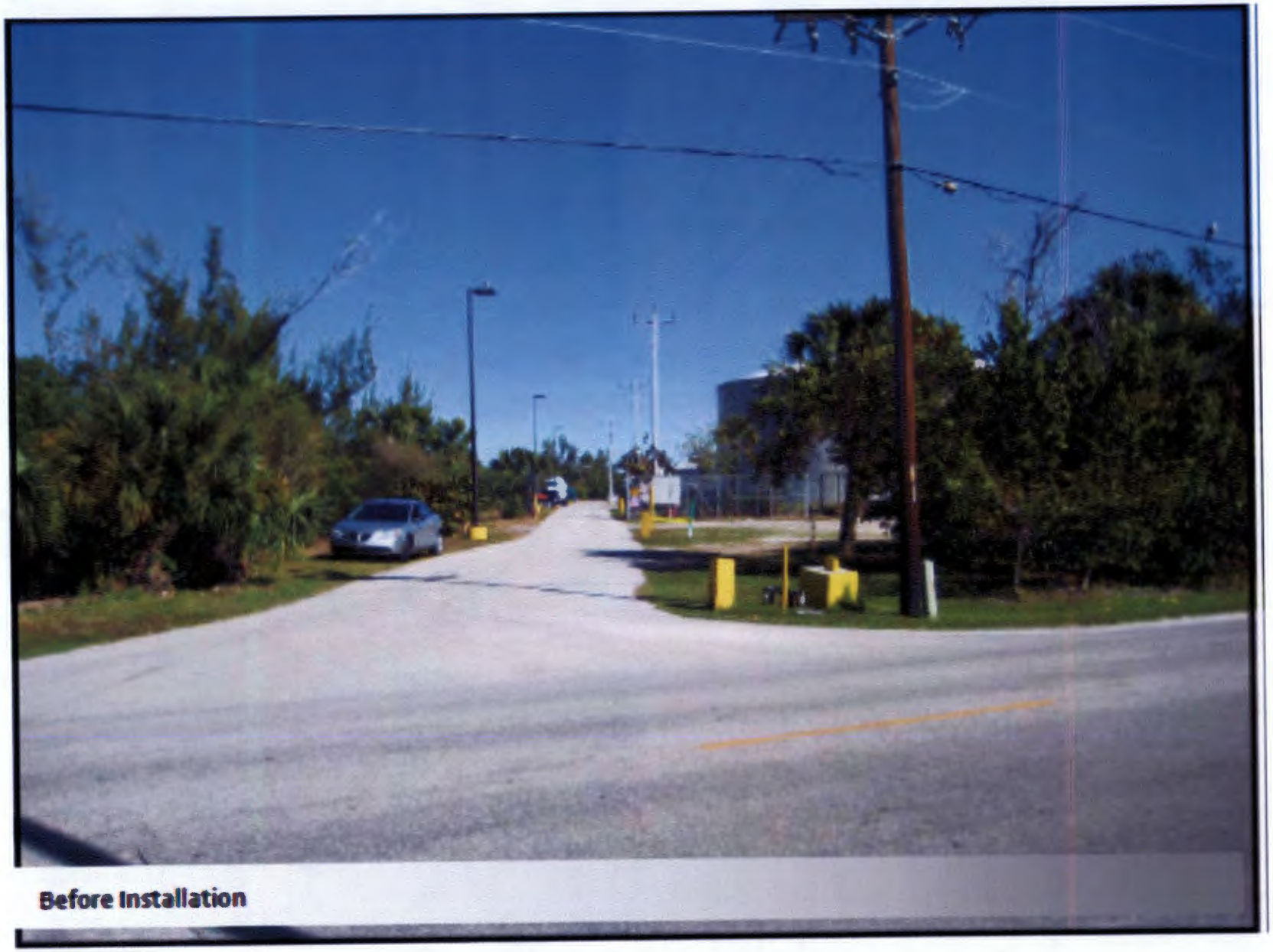

View from Donax Street #4

View from Donax Street #4

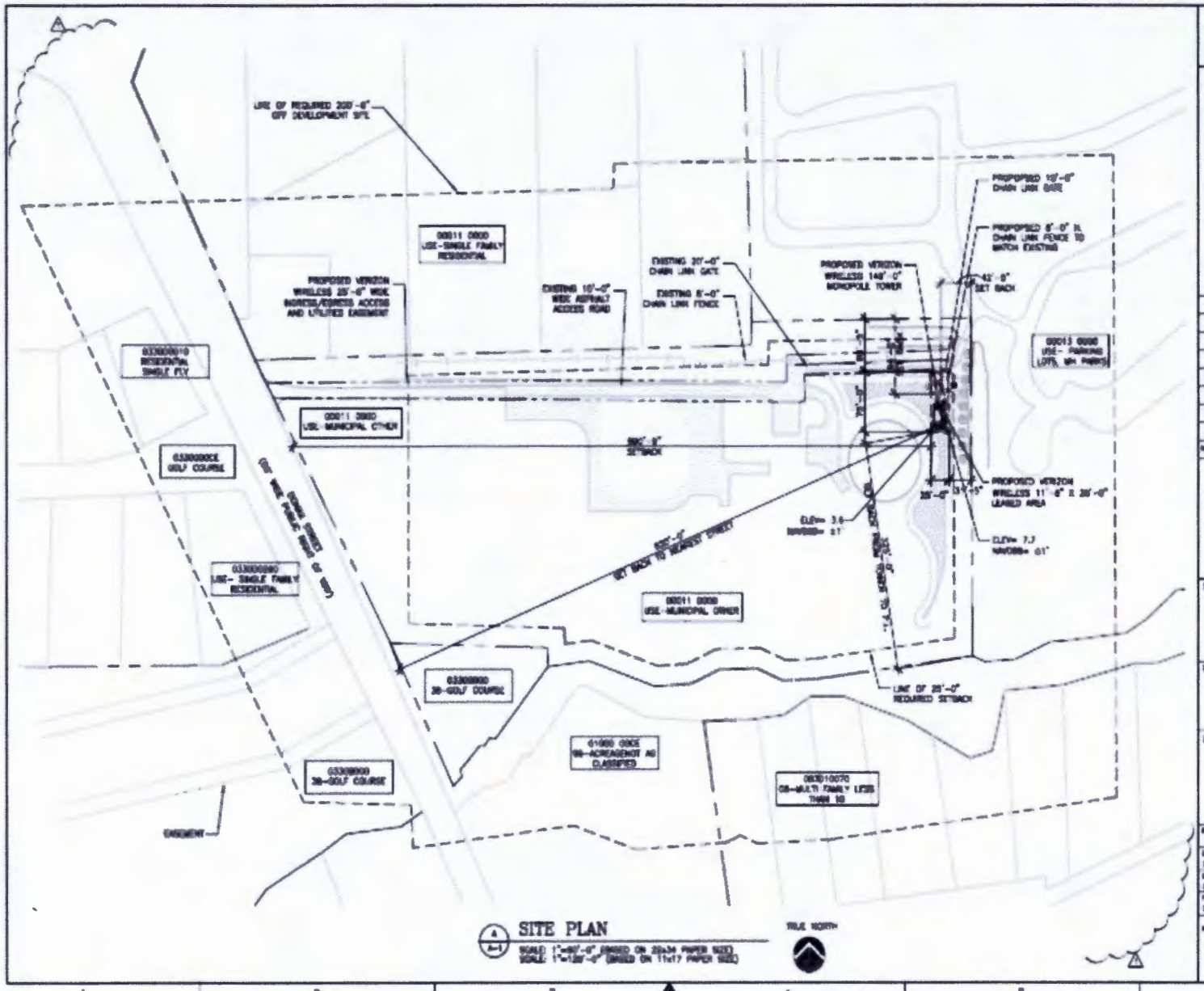

No.	Date	Action
4		
3		
2		
1	05/07/10	ISSUED FOR ZONING
D	05/13/09	ISSUED FOR ZONING
C	01/01/09	ISSUED FOR ZONING
B	05/06/08	ISSUED FOR ZONING
A	05/01/08	ISSUED FOR ZONING

MORRISON HERSHFIELD

Client: verizon wireless
777 YAMATO ROAD, SUITE 600
BOCA RATON, FLORIDA 33431
(561) 995-1000

Project: DONAX WATER RECLAMATION FACILITY

Drawing Title: SITE PLAN

Designed: CC
Drawn By: SD, AM
Checked By: AL, CC
File Number: CF
Client Approval
Sheet No. 1
Drawing No. A-1

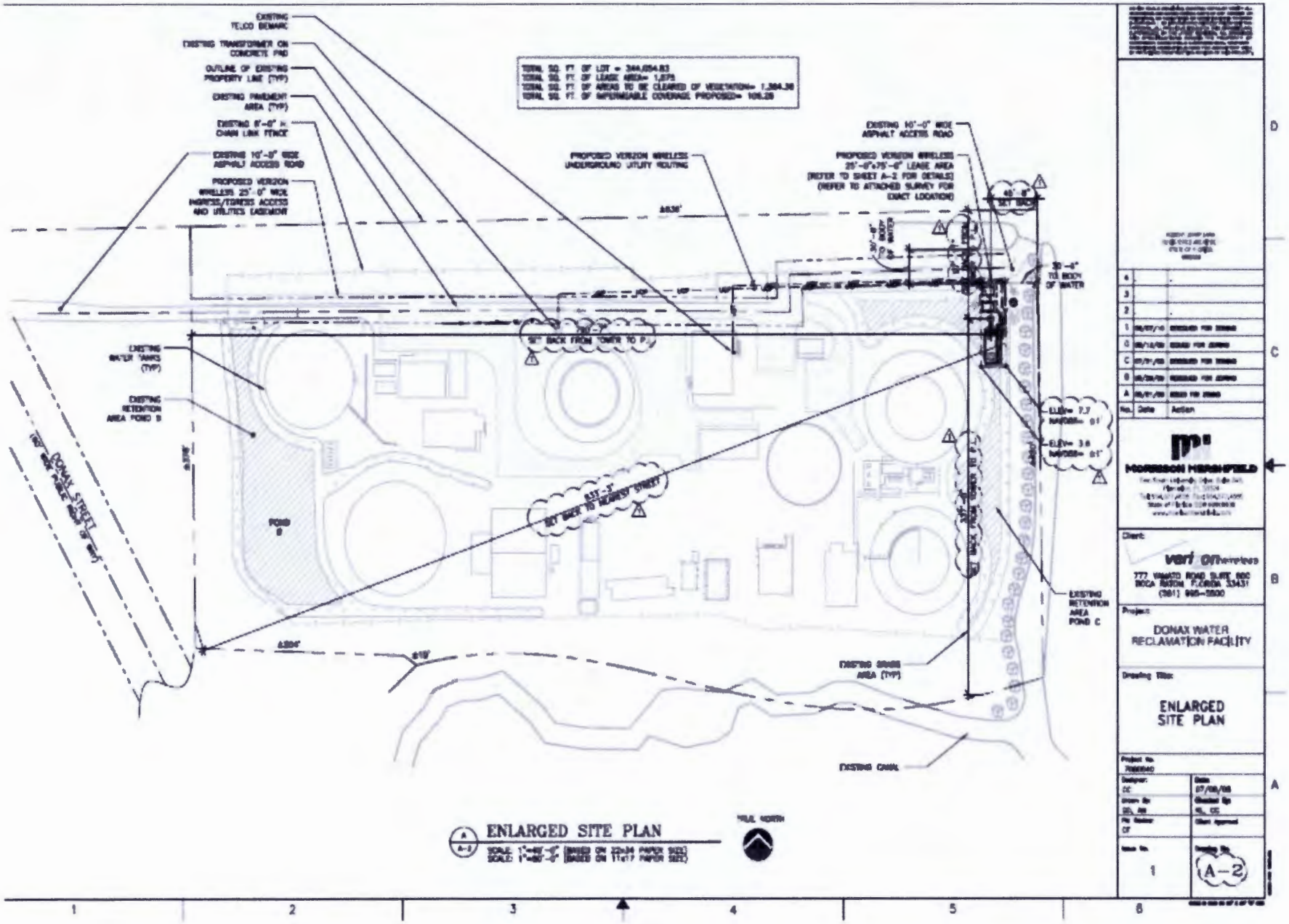
EXISTING TELCO BENCH
EXISTING TRANSFORMER ON CONCRETE PAD
OUTLINE OF EXISTING PROPERTY LINE (TYP)
EXISTING PAVEMENT AREA (TYP)
EXISTING 8'-0" H. CHAIN LINK FENCE
EXISTING 10'-0" WIDE ASPHALT ACCESS ROAD
PROPOSED VERIZON WIRELESS 25'-0" WIDE INGRESS/EGRESS ACCESS AND UTILITIES EASEMENT
PROPOSED VERIZON WIRELESS UNDERGROUND UTILITY ROUTING
PROPOSED VERIZON WIRELESS 25'-0"x75'-0" LEASE AREA (REFER TO SHEET A-2 FOR DETAILS) (REFER TO ATTACHED SURVEY FOR EXACT LOCATION)
EXISTING 10'-0" WIDE ASPHALT ACCESS ROAD
EXISTING WATER TANKS (TYP)
EXISTING RETENTION AREA POND B
POND B
DONAX STREET
EXISTING RETENTION AREA POND C
EXISTING GRADE AREA (TYP)
EXISTING CANAL
ENLARGED SITE PLAN
TRUE NORTH
MORRISON MERSHFIELD
verizon wireless
DONAX WATER RECLAMATION FACILITY
ENLARGED SITE PLAN
A-2

VEGETATION:

ALL EXISTING VEGETATION WITHIN PROPOSED LEASE AREA TO BE RELOCATED

NOTE:

CONTRACTOR SHALL LOCATE ALL UNDERGROUND UTILITY LINES PRIOR TO CONSTRUCTION WITHIN PROPOSED VERIZON WIRELESS LEASE AREA AND EASEMENTS.

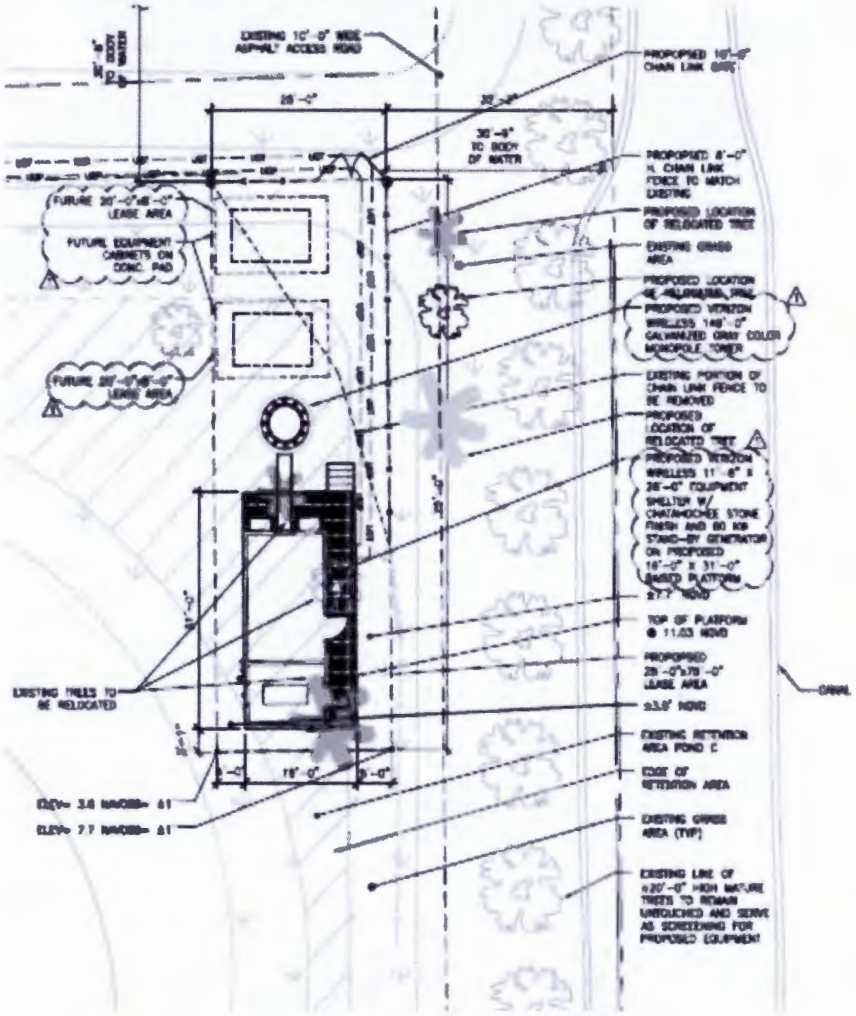

COMPOUND PLAN

SCALE: 1/8"=1'-0" (BASED ON 22x34 PAPER SIZE)
SCALE: 1/16"=1'-0" (BASED ON 11x17 PAPER SIZE)

No.	Date	Action
4		
3		
2		
1	[illegible]	REVISED FOR ZONING
C	[illegible]	REVISED FOR ZONING
C	[illegible]	REVISED FOR ZONING
B	[illegible]	REVISED FOR ZONING
A	[illegible]	ISSUED FOR ZONING

MORRISON HERSHFIELD

Client: verizon wireless
777 YAMATO ROAD, SUITE 600
BOCA RATON, FLORIDA 33431
(561) 995-5800

Project: DONAX WATER RECLAMATION FACILITY

Drawing Title: COMPOUND PLAN

Project No.: [illegible]
Designer: CC
Date: 07/08/08
Drawn By: SD, AM
Checked By: RL, CC
File Name: CF
Client Approval:
Issue No.: 1
Drawing No.: A-3

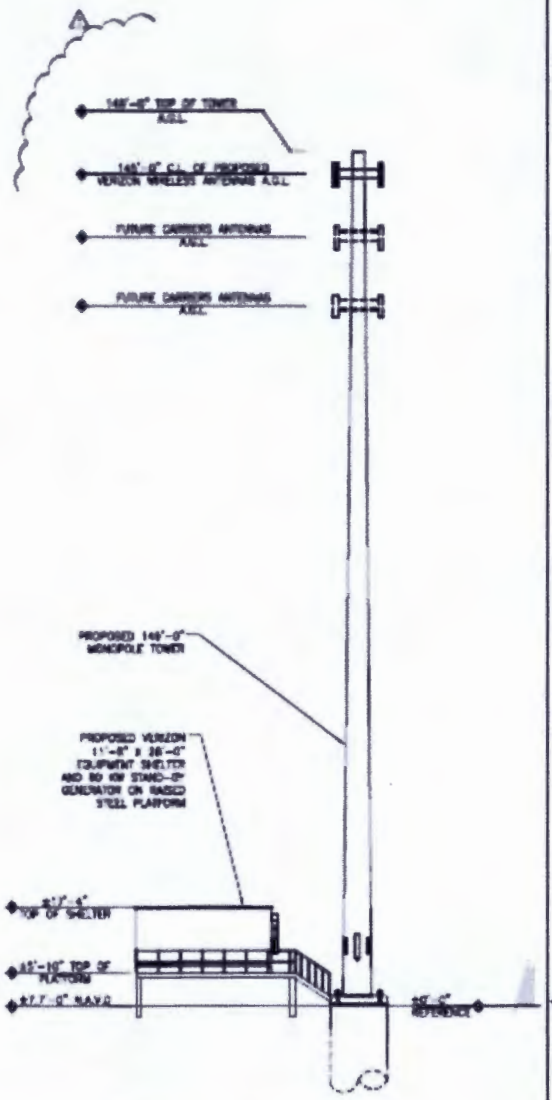

EAST
TOWER ELEVATION
A
SCALE 1/32"=1'-0" (BASED ON 22x34 PAPER SIZE)
SCALE 1/32"=1'-0" (BASED ON 11x17 PAPER SIZE)

NORTH
TOWER ELEVATION
B
SCALE 1/32"=1'-0" (BASED ON 22x34 PAPER SIZE)
SCALE 1/32"=1'-0" (BASED ON 11x17 PAPER SIZE)

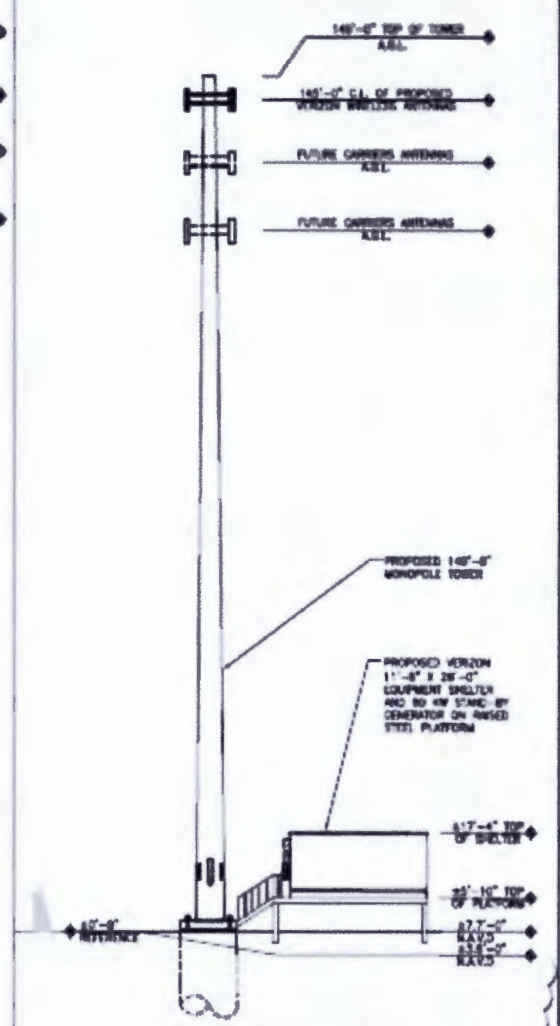

WEST
TOWER ELEVATION
C
SCALE 1/32"=1'-0" (BASED ON 22x34 PAPER SIZE)
SCALE 1/32"=1'-0" (BASED ON 11x17 PAPER SIZE)

No.	Date	Action
4		
3		
2		
1	08/07/08	REISSUED FOR ZONING
0	08/13/08	ISSUED FOR ZONING
C	07/31/08	REISSUED FOR ZONING
B	06/26/08	REISSUED FOR ZONING
A	06/07/08	ISSUED FOR ZONING

MORRISON HERSHFIELD

Client:
verizon wireless
777 YAMATO ROAD, SUITE 600
BOCA RATON, FLORIDA 33431
(561) 995-1500

Project:
DONAX WATER RECLAMATION FACILITY

Drawing Title:
TOWER ELEVATIONS

Project No.: 7000000
Designer: CC
Date: 07/08/08
Drawn By: SD, AA
Checked By: KL, CC
File Name: CF
Client Approval

Issue No.: 1
Drawing No.: A-4

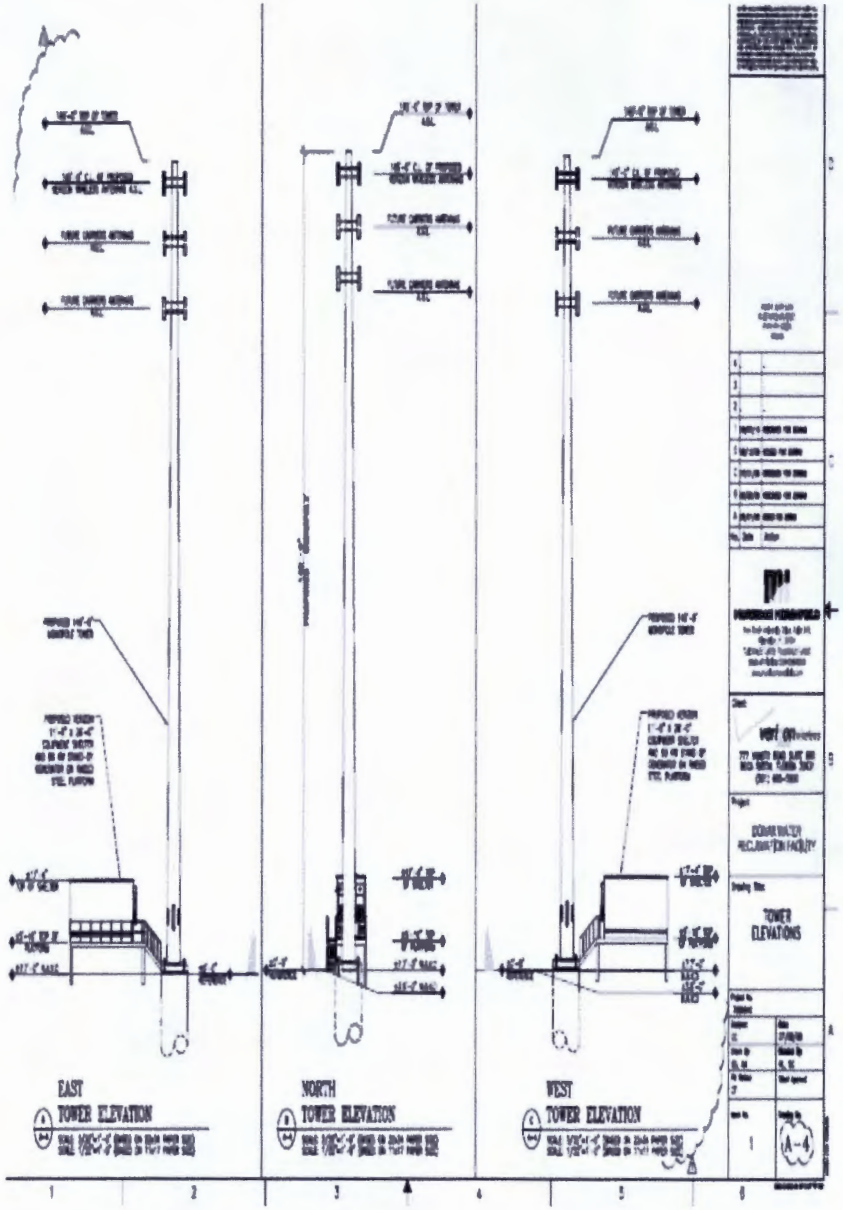

Close-Mounted Antenna vs T-Arm Antenna

Public Comment
None

The motion carried.

Consideration, by City Council, of a development permit application submitted for the construction of a new 149 feet, above ground level, monopole design telecommunication tower with attached antenna arrays and providing a collocation sharing capacity for 2 additional telecommunications service providers. The proposed telecommunication support structure includes an equipment shelter to house a Base Transceiver Station (BTS), connected via cables to the antenna arrays, an emergency power generator and a 25' X 75' fenced-in area to contain the tower and ancillary equipment installed on City-owned land located at the Donax Street Wastewater Reclamation Facility, at 930 Donax Street, a telecommunications tolerant site. This request is to be processed under the provisions of Land Development Code Sections 126-1561 Application Requirements and 78-7, City Exempt standard. The subject application is filed by Laura B. Belflower Attorney, on behalf of Verizon Wireless Personal Communications LP, d/b/a Verizon Wireless
Staff Report – Verizon Wireless Personal Communications
RESOLUTION 11-007 APPROVING THE CONSTRUCTION OF A 149 FOOT MONOPOLE ABOVE GROUND LEVEL (AGL) TELECOMMUNICATIONS TOWER, TO ATTACH ANTENNAS TO THE MONOPOLE, CONSTRUCT EQUIPMENT SHELTER TO HOUSE THE BASE TRANSCEIVER STATION (BTS), VIA CABLES TO CONNECT THE BTS TO THE ANTENNA AND TO FENCE IN AN AREA 25' X 75' TO CONTAIN THE EQUIPMENT ON CITY-OWNED LAND AT THE DONAX STREET WASTEWATER RECLAMATION FACILITY, AT 630 DONAX STREET IN THE CITY OF SANIBEL; THE REQUEST IS BEING PROCESSED UNDER THE PROVISION OF LAND DEVELOPMENT CODE SECTION 78-7, CITY EXEMPTED; THE APPLICATION IS NUMBERED 10-5524 AND FILED ON BEHALF OF VERIZON WIRELESS PERSONAL COMMUNICATIONS LP, d/b/a VERIZON WIRELESS; AND PROVIDING AN EFFECTIVE DATE
Ms. Zimomra read the title of Resolution 11-007.

Mr. Cuyler explained the following:

- Conduct a continued quas-judicial hearing
- Swearing of witnesses
- Ex-parte disclosure
- Decade ago adopted a telecommunications ordinance
- Inclusive was City-owned preferred properties listed by name
- Donax Plant site the eastern most site
- Verizon applied under ordinance
- Question for Council was whether Verizon had submitted an application in accordance with the ordinance

Ex-Parte Disclosure

Mayor Ruane	2 meetings with residents regarding location and proposed site
Councilman Harrity	Read emails
Councilman Jennings	Conversation with residents and read emails
Councilman Pappas	Cell phone message from Tom Krekel and gentleman shook hands this morning and received emails

The City Clerk asked all people in the audience planning to give testimony to be sworn in as follows:

John Morse
Tom Krekel
Dr. Mike Darishing
Dr. Will Salt
Jim Greenwood
Gayle Greenwood
Larkin Hammond
Dr. Lindell Kingsauer
Richard Travis

Roy Gibson, Acting Planning Director spoke to the following:

- Planning Department staff report of February 04, 2011 supplement
- Verizon Wireless submitted additional information
    - 149 foot tower with capacity of 2 additional carriers
    - 38 recommended conditions remain the same
    - Additional information submitted – includes a request to lease a 25 foot by 75 foot are to construct a telecommunications tower
    - Enclosed lease area by fence
    - Construct 149 foot tower with two co-locators
- Alternate on-site location identified by staff
    - Front yard of the Donax Plant site – existing retention area
    - Places tower within 150 feet from center line of Donax Road
    - Inside a retention pond
    - Does not impact any known existing improvement, except the retention area may need to be raised or expanded to retain the same amount of stormwater
    - Verizon accepted alternate location
    - If approved Verizon submit engineering plans
    - Come back to Council with revised site plan
    - Applicant considered changes to height of tower and in lieu of the 149 feet could agree to 130 feet
    - 130 feet reduces the opportunity for other co-location
    - Staff supports the height at 149 feet to accommodate the most co-location opportunities
    - Directed to review alternative design
    - Tower resembling a flagpole, antenna concealed within structure or a Pine tree and antenna concealed within the braches
    - Verizon agreed to the flush mounted antennas same approved at the Wulfert treatment plant site
    - Approximate distance between two sites was 752 feet west of first site
    - Meet applicable FCC exposure risks
    - FAA regulations exempt
    - Tower designed to meet wind load requirements
    - Monopole designed for a 40 foot radius design (vertically not horizontally)
    - All 38 conditions be included with approval

Ms. Bellflower spoke to the following:

- Verizon agreed to flush mount antenna brackets
- Meets all City applicable requirements
- Agreed to move to the western location
- Engineer not completed
- Ability to bring western site engineering to Council
- 130 feet needed – flush mount and flag pole would need two heights
- Co-location would need 149 feet
- New FAA certification
- Letter regarding FAAA compliance submitted
- Tree tower uses t-arm within branches
- Flag pole with or without a flag
- Most that chose a flagpole tower do not fly a flag
- Issues with flying flag, lighting from base, but due to ordinance lighting must be at the top
- No pole designers have done antennas inside the flagpole
- Flagpole design 4 feet wide at the top
- Internal antennas may create a difficulty with design
- Can make either flagpole or tree design work
- Request for approval

Discussion ensued regarding choosing design if there would be a cost to City; Ms. Belflower stated it would be designed with requirements, and Verizon not responsible for raising and lowering the flag.

Public Comment
Dr. Mike Darishing spoke in favor of the cell tower alternate site. He further spoke to radio wave from the cell tower and may or may not be an issue. He further spoke to a Swedish article that notes personality changes and brain tumor within the cell tower area. He advised that if a brain tumor were to develop the City would be libel.

Dr. Will Salt agreed with the previous speaker.

John Morse spoke to supporting the alternative site and suggested amending language of Resolution 11-007. He further spoke to the flagpole and flag and only needing one employee to put up and take down. He stated that residents would like to have the flag raised and lowered daily.

Jim Greenwood spoke in favor of the alternative site. He further spoke to Craneville, Oregon having a flagpole tower. He recommended a smaller flag and offering a contract to raise and lower the flagpole daily.

Gayle Greenwood spoke in favor of the alternative site. She further spoke to speaking with numerous entities and approved of the

Tom Krekel spoke in favor of the alternative site and flagpole design with flag flying during the day.

Larkin Hamrnond spoke in favor of the alternative site and flagpole design with flag.

Dr. Lindell Kingsauer spoke to the affect on the bird population. He further spoke to a tower built with birds in mind.

Richard Travis spoke in favor of the alternative location, but recommended in the retention pond area north of Periwinkle Way.

Dr. Mike Darishing spoke to the fact there were changes in songbird population.

Discussion ensued regarding a potential alternative site if engineering could not make the alternative site work, Mr. Cuyler stated that Ms. Belflower stated same that if engineering could not be worked out Verizon would come back to Council, Mayor Ruane abstained at the last vote, Mr. Cuyler stated that the legislature passed a law that unless there was a financial conflict as described in the statute a vote was required, he further stated exception of being incapable of being fair he would give leeway reference voting, but required by law to vote, closed mount if only tower, if flagpole used up lighting needed and size of flag, flag rope hits the pole in the wind creating noise, Mr. Cuyler noted that at some point give Ms. Belflower the opportunity to make any comments, ordinance in place and allow cell towers, if tower designed as a flagpole should be a working flagpole, guide wires more problem with bird kills, tower would not have guide wires, first duty to law, Verizon met requirements, community spoken to have the alternate site and appearance that residents want, why regular tower design dismissed, must decide if a flag would be flown, what size flag, smaller flag appropriate, may be better off removing flag at night, need more information of interior/exterior flag raising, and would like the interior flag pole raising equipment.

Ms. Belflower responded as follows:

- May be possible that the tower photo was less or greater in width than towers were now, but at least two feet wide
- Condition removed for tower to be painted white rather than grey
- Condition removed if flag pole design accepted due to the antenna flush mount would not work
- Option to include lights and could decide later

Discussion ensued regarding preference of flying a flag at tower location all the time would reduce staff time, would like to see design with interior pulley system if technology was available, if possible, 149 feet of flag pole ropes would make a noise during the wind,

Provided technology available to have interior mount and pulley system, for alternative site

Mayor Ruane moved, seconded by Councilman Jennings, to approve the revised site, a flagpole tower design with ability to fly a flag, interior design factor if technology allows, flag flying resolved by staff and adopt Resolution 11-007 as amended with the aforementioned, entering into a lease agreement with Verizon when Verizon comes back to City Council for said lease. In the event the revised site cannot be engineered, the applicant must obtain Council approval for another location at the Donax site.

Ms. Belflower stated looking at the photo simulation the close mounts would be 2 feet off pole.

Public Comment
Gayle Greenwood spoke to flagpole design on Highway 75 in a retention site.

The motion carried.

Council recessed at 11:34 a.m.

Council reconvened at 11:42 a.m.

The City microphone was not turned on the microphone after the break.

CONSENT AGENDA

Councilman Jennings requested that item (f) be pulled.

f. **RESOLUTION 11-012 APPROVING BUDGET AMENDMENT/TRANSFER NO. 2011-010 AND PROVIDING AN EFFECTIVE DATE** (to transfer $200,000 from the Transportation Fund to the Transportation Capital Project Fund for additional construction costs

CITY OF SANIBEL

RESOLUTION 11-007

A RESOLUTION APPROVING THE CONSTRUCTION OF A 149 FOOT MONOPOLE ABOVE GROUND LEVEL (AGL) TELECOMMUNICATIONS TOWER, OF A FLAGPOLE-TYPE DESIGN, TO ATTACH INTERNAL ANTENNAS INSIDE THE MONOPOLE, CONSTRUCT EQUIPMENT SHELTERS TO HOUSE THE BASE TRANSCEIVER STATION (BTS), VIA CABLES TO CONNECT THE BTS TO THE ANTENNA AND TO FENCE IN AN AREA 25' X 75' TO CONTAIN THE EQUIPMENT ON CITY-OWNED LAND AT THE DONAX STREET WASTEWATER RECLAMATION FACILITY, AT 930 DONAX STREET IN THE CITY OF SANIBEL; THE REQUEST IS BEING PROCESSED UNDER THE PROVISION OF LAND DEVELOPMENT CODE SECTION 78-7, CITY EXEMPTED; THE APPLICATION IS NUMBERED 10-5524 AND FILED ON BEHALF OF VERIZON WIRELESS PERSONAL COMMUNICATIONS LP, d/b/a VERIZON WIRELESS; AND PROVIDING AN EFFECTIVE DATE.

WHEREAS, Application 10-5524 was filed by Laura B. Belflower, Attorney, on behalf of Verizon Wireless Personal Communications LP, d/b/a Verizon Wireless for construction of a 149 foot monopole and associated equipment on City-owned land at 930 Donax Street; and

WHEREAS, the City Council held public hearings on December 7, 2010 and February 1, 2011 to consider such Application; and

WHEREAS, all public hearings were appropriately and legally noticed and at all such public hearings the City Council took and considered such sworn testimony, evidence and/or arguments presented by or on behalf of the Applicant, and all interested parties appearing at and participating in such public hearings;

NOW, THEREFORE, BE IT RESOLVED by the City Council of the City of Sanibel, Florida, that:

SECTION I. FINDINGS.

The City Council hereby finds as follows:

(a) The Application was filed and processed in accordance with applicable City ordinances, rules and regulations, including Article XVII Telecommunications Devices, and Section 78-7, City exempted, of the Sanibel Code of Ordinances.

(b) All persons wishing to provide sworn testimony, evidence and/or arguments with respect to the Application were provided an opportunity to do so during the public hearing process.

(c) Based upon the sworn testimony and evidence presented to the City Council and set forth in the record, the City Council finds that the Application meets all required criteria in the Sanibel Code of Ordinances relating to the location and development of the telecommunication facility applied for in the Application, and meets all other requirements and criteria of the City necessary for approval of the Application. The City Council further finds that there was competent substantial evidence provided at the hearing to support the approval of the Application and telecommunication tower construction as described in this Resolution and in accordance with the conditions of this Resolution.

SECTION 2. APPROVAL OF APPLICATION.

The Application filed by Laura B. Bellflower Attorney, on behalf of Verizon Wireless Personal Communications LP, d/b/a Verizon Wireless, is hereby approved with all conditions set forth in the Planning Staff Report presented at the December 7, 2010 Council meeting, as amended by City Council actions at the Council meeting of February 1, 2011 (such conditions are attached hereto and incorporated herein as Attachment "A" to this Resolution). The approval is further conditioned as follows:

1. The location of the telecommunications tower and ancillary equipment shall be near the west boundary of the Donax Street Wastewater Reclamation Facility site, 930 Donax Street, within a 75' x 25' area generally depicted on Attachment "B", attached hereto and incorporated herein. In the event that

Verizon Wireless advises the City Council, in writing, that the tower, base transceiver station and ancillary equipment cannot be placed in such general location, this approval shall be subject to full rehearing and reconsideration of City Council and separate approval shall be required from City Council as to any new location on the Donax site.

2. The telecommunications tower shall, as agreed by Verizon Wireless, be constructed in a "stealth design" as a flagpole with all antennae arrays placed within the tower structure. Such design shall allow for collocation within the tower structure of antennae for two additional telecommunications providers.

3. The City Council (or its designee) shall consider and shall be the sole authority to decide whether and/or when to display the American Flag on the telecommunications tower. Prior to, or at the time of, the real property lease to be considered by City Council for the telecommunications tower site, the City shall advise Verizon Wireless (through its application representative) of whether the tower is to be constructed with the flag pulley system on the inside or outside of the tower structure, and whether "downward" lighting is to be affixed to the top of the tower to light a flag.

SECTION 3. Effective date.

This resolution shall take effect immediately upon adoption.

DULY PASSED AND ENACTED by the Council of the City of Sanibel, Florida, this 1st day of February, 2011.

AUTHENTICATION:

Kevin Ruane, Mayor

Pamela Smith, City Clerk

APPROVED AS TO FORM: Kenneth B. Cuyler 2/22/11
Kenneth B. Cuyler, City Attorney Date

Vote of Council Members:

Ruane	yea
Denham	excused
Harrity	yea
Jennings	yea
Pappas	yea

Date Filed with City Clerk: February 1, 2011

Attached Conditions for Development Permit No. 10-5524 Approving the Installation of a 149' AGL Telecommunications Tower and Ancillary Equipment at 630 Donax Street

Applicant:	Verizon Wireless
Property Owner:	City of Sanibel
Date:	February 22, 2011
Subject:	**Development Permit Conditions for City Council Resolution 11-07**

The following conditions have been extracted from the Planning Department Staff report for the December 7, 2010 City Council meeting regarding Development Permit 10-5524 submitted on behalf of Verizon Wireless Personal Communications LP, d/b/a Verizon Wireless to construct a 149 feet above ground level telecommunications support tower located on the Donax Street Wastewater Reclamation Facility, at 630 Donax Street, a telecommunications tolerant site.

Staff recommends that the following conditions, which in part have been taken from the standards and requirements of Land Development Code Article XVII. Telecommunications Devices, be attached to the approval of the draft Resolution that has been prepared for the subject development permit.

1. The tower and all attachments thereto shall be painted either a light grey or white to help, to the extent possible, minimize the visual obtrusiveness of the support structure and its attachments.

2. With the exception of dark sky compliant down lighting, associated with displaying the American Flag, the "stealth design" flag pole telecommunications tower shall not be illuminated nor have any lights attached to it unless otherwise required by the FAA. In the event that certain lights are required, by either the FCC or FAA, to be placed on the tower, such required lights shall be deemed permitted under those circumstances. Verizon Wireless shall provide the City, in writing, with all supporting documentation as evidence of supporting any required lighting.

3. All electrical equipment and equipment cabinets shall be elevated to or above the FIRM base flood elevation of AE, Elevation 11 feet, NAVD.

4. In accordance with the preapproval review comments received from the City's Building Official, Harold Law, compliance with the submittal of the following items of information is required:

a. wind loads shall use exposure C in calculations;
b. Flood zones shall be shown and addressed;
c. All elevations shall be in NAVD only; and
d. All plans shall be signed by Florida Engineer and completed structurally for permitting.

5. A vegetation buffer of sufficient depth and density shall be installed and maintain, in compliance with the visual compatibility standards of Land Development Code Section 126-1598, around the perimeter of the fenced-in land lease area.

6. In accordance with **Land Development Code Section 126-1589,**

   a. **Artificial lighting** shall be limited to:
   Security lighting for any equipment, buildings, shelters or other on-the-ground ancillary equipment and structures, shall be compliant with the outdoor lighting standards of this land development code. Such lighting shall be manually operated and used only during night maintenance checks or in emergencies.

   b. **Signage**

      i. No signage shall be allowed on any telecommunications facility except as required for public safety purposes, or by the FCC or FAA.

      ii. No telecommunications device shall have advertising on it or contain any sign or insignia for the purpose of advertising.

      iii. The display of required Federal Communications Commission tower registration information is permitted, using the smallest sign face which meets FCC requirements.

   c. **Secure design and safety**

      i. All parts of telecommunications facilities shall maintain clearances from any electricity lines and equipment as required by the National Electrical Safety Code (NESC).

      ii. Telecommunications equipment shelters shall be of vandal-resistant design or shall be provided with a suitable security barrier.

      iii. A controlled access enclosure is required around the base of the mount and equipment shelters of all telecommunications devices as principal uses.

iv. Access to the telecommunications device as a principal use and ground equipment shall be only through a lockable entrance.

7. All sound-emitting devices shall comply with the requirements set forth in Land Development Code Section 30-61 et seq., pertaining to noise and Division 16 Emergency Electric Power Generator.

8. The "stealth design" telecommunications tower, including surmounting appurtenances, shall not exceed a height of 149 feet, AGL. Furthermore, the attached antenna arrays shall be concealed inside of the "stealth design" flagpole.

9. Foundations for ground-mounted, structure-mounted and utility-pole-mounted telecommunications devices shall not disturb, break or penetrate the aquiclude or clay layer at the bottom of the freshwater lens, permit saltwater intrusion or otherwise endanger the integrity of the freshwater lens. If it is necessary to drive pilings below the level of the aquiclude, such penetration shall be sealed according to the best technology available to avoid saltwater intrusion.

10. All telecommunications devices shall be subject to periodic reinspections.

11. All telecommunications devices shall meet all manufacturers' specifications. Any mount or accessory equipment shall be of noncombustible and corrosive-resistant material. Miscellaneous hardware, such as brackets, turnbuckles, clips and similar equipment subject to rust or corrosion shall be protected with a zinc coating either by galvanizing or sheradizing process after forming, or by use of stainless steel fittings, or by equivalent protective processes. These finishes are selected to guard against corrosion and to protect the elements against electrolytic action due to the use of adjoining dissimilar metals.

12. All telecommunications devices shall be maintained in good condition and in accordance with all the standards of this section. No additions, changes or modifications shall be made to a device unless the addition, change or modification is in conformity with all applicable standards of the land development code. All required permits must also be obtained for additions, changes or modifications.

13. Mounts shall be the narrowest feasible at the horizontal measurement to provide the required stability and loading specifications for the telecommunications support tower and required attachments thereto.

14. Permanent platforms, exclusive of antennas, that serve to increase the visibility of the telecommunications device from off-site are not permitted.

15. All mounts, antennas and surmounting appurtenances, including attachments thereto, shall be of a type, design, color and texture which are the least visually obtrusive structures possible, while accomplishing their intended purpose.

16. At all times each facility shall be insured for liability in an amount of not less than $5,000,000.00. For each facility, the applicant or owner shall provide to the city a bond or other security in an amount sufficient to ensure that the facility is returned to its natural state upon abandonment.

17. All telecommunications devices, including support structures, mounts and surmounting appurtenances shall be designed and constructed to meet the following codes and standards:

    (a) The Sanibel Building Code, which includes a 120-mph wind load, as defined by the American Society of Civil Engineers, Publication No. 7 of 1993 (ASCE 7-93), and the 1997 Standard Building Code, or its then current replacement.

    (b) FAA Advisory Circular # AC70.7460-1H.
    (c) Electronics Industries Association (EIA) Standards, the then-current revision of EIA/TIA 222.

    (d) Wind load analysis and basic wind speed shall comply with the most current EIA standards and local building codes. Where standards differ, the more stringent code shall be used. In no case will the basic wind speed be less than 120 miles per hour.

18. Ground-mounted telecommunications facilities shall be accessible by service vehicles.

19. All new ground-mounted facilities shall be designed and constructed to accommodate shared use when technically feasible and practical. The owner of the telecommunications mount shall, as an ongoing condition of the required development permit, respond to requests for other service providers, in a timely manner, as to the availability of space on the telecommunications mount.

20. The design and construction of telecommunications support structures for collocation shall assume that each additional service provider will have loading requirements comparable to the original proponent. The owner of the device must provide reasonable leasing opportunities to other service providers to use the device.
21. A reasonable pro rata charge may be made for shared use, or rental rates consistent with prevailing market conditions may be charged, consistent with an appropriate sharing of construction, financing and maintenance costs. Fees may also be charged for any structural or radio

frequency changes necessitated by such shared use. Such sharing shall be a condition of approval, if approval is granted.

22. For the land lease consideration, the applicant shall describe what range of charges is reasonably expected to be assessed against shared users. In addition, the applicant shall base charges on generally accepted accounting principles and shall explain the elements included in the charge.

23. The applicant shall quantify the additional mount capacity proposed, including the number and types of antenna. The applicant shall also describe any limitations on the ability of the mount to accommodate other users, such as radio frequency interference, mast height, frequency or other characteristics. Verizon's or the tower manufacture's engineer shall certify the number of additional mounts that the "stealth design" tower can carry.

24. All support structures and attachments thereto shall present the slimmest profile possible, as seen from public views, by utilizing facilities/devices and construction materials and techniques with the smallest feasible diameter, diagonal or horizontal measurement.

25. To the greatest feasible extent, equipment shelters associated with ground-mounted or utility-pole-mounted telecommunications facilities shall be concealed from public view or shall be buffered to be compatible with surrounding land uses.

26. The telecommunications device, supporting structures and accessory equipment:

    (a) Shall not be made of materials which are bright, shiny, garish or highly reflective of light; and

    (b) Shall be screened by the use of landscaping or architectural features which harmonize with the elements and characteristics of the parcel on which it is located and adjacent properties.

27. Mounts, antennas, towers, equipment shelters, support structures, storage facilities, operations buildings and auxiliary structures shall be screened from public view to the greatest extent feasible.

28. A vegetation buffer shall be installed or augmented to comply with this subsection as determined by the City Manager.
29. Prior to receiving a completion certificate, the applicant shall certify in writing that the telecommunications device complies with all current Federal Communications Commission regulations for nonionizing electromagnetic radiation and radio frequency emission levels.

30. No telecommunications device shall transmit signal strengths in excess of those allowed under the current federal regulations.

31. The applicant shall certify in writing that the device complies with all current Federal Aviation Administration regulations and with Southwest Florida International Airport Authority requirements.

32. Documentation must be submitted that the applicant possesses all required licenses required by federal, state, or local agencies to operate, own, or install such a device.

33. Prior to the issuance of the completion certificate required by section 82-362, or a certificate of occupancy, the applicant for a telecommunications device, as a principal use, shall furnish the city with the following certifications:

(a) **Radio frequency (RF) emissions**. Each applicant shall certify that it is in compliance with the Federal Communications Commission's RF emissions rules as they relate to human exposure. Such certificate shall be furnished with respect to both new devices and each proposed addition to a radio site. The certification shall be furnished by an individual with demonstrated competence in the field of RF emissions.

(b) **Environmental rules**. Each applicant shall certify that it is in compliance with the FCC's environmental rules, as well as the Florida Department of Environmental Protection Agency requirements. The certification shall be furnished by an individual with demonstrated competence in the field of FCC's environmental rules.

(c) **FCC/FAA marking and lighting requirements**. Each applicant shall certify that the construction and operation of its proposed device is, and will remain, in compliance with part 17 of the FCC's rules and satisfies the FAA's rules and regulations. The certification shall be furnished by an individual with demonstrated competence in the field of FCC/FAA marking and lighting requirements.

(d) **Certification of compliance with all applicable standards and codes**. The applicant shall certify that the proposed use, engineering design, manufacture, construction and safety are in accordance with the latest revision of industry codes, design guides, and applicable standards in effect at the time of issuance of the permit. In addition, the applicant shall certify that all applicable federal, state, and local codes and standards have been observed, and that the devices have been installed in accordance with the approved plans.

34. With regards to the approval of the land lease the following requirements shall apply to this application:

(a) Telecommunications devices, sites or permits may not be sold, transferred or assigned until the assignee obtains approval from the city, except in conjunction with the sale or transfer of the underlying FCC license, provided written notice is given to the city within 30 days of consummating such transaction. When prior city approval is required, such city approval shall be granted upon determination by the assignee that it has the capability of complying with the ongoing obligations of this land development code.

(b) Sublease of a telecommunications device shall not be entered into by any provider until the sublessee has obtained a development permit from the city for the telecommunications device, or the sublease is conditioned on sublessees' receipt of a development permit, prior to commencing any construction.

(c) Potential providers may not claim that a permit should be issued by the city for an assigned or subleased telecommunications device on the basis of any expense incurred in relation to the device.

35. The city may inspect any telecommunications device that is a principal use to ensure that the mount and its antennas and equipment shelters are being maintained in compliance with the standards of this section. Upon a determination that a telecommunication device does not comply with the standards of this section, or constitutes a danger to persons or property, the owner of the device shall have 30 days to bring the device into compliance.

36. If the use of any telecommunication device, or any portion of a telecommunication device, has been discontinued for a period of 180 consecutive days, the telecommunication device shall be deemed to be abandoned.

    Upon a determination of abandonment, the owner or operator of the telecommunications device shall have 90 days within which to:

    (a) Reactivate the use of the telecommunications device;

    (b) After submitting an application to the city to do so, transfer the telecommunications device to another owner or operator who makes actual use of the device within 45 days following the completion of the transfer; or

    (c) Dismantle and remove the telecommunication device, or any unused portion thereof. All costs associated with dismantling and removal of the device shall be borne by the owner or operator of the telecommunications device.

The owner of the abandoned telecommunications device and the owner of the property where the device is located shall be under the duty to remove the device and restore the property to its preexisting condition. If it is not removed within 60 days after notice from the city requiring removal, the City may remove it and restore the property to its preexisting condition. The cost of removal and site restoration shall constitute a lien upon the property.

Any delay by the city in taking action shall not in any way waive the city's right to take action.

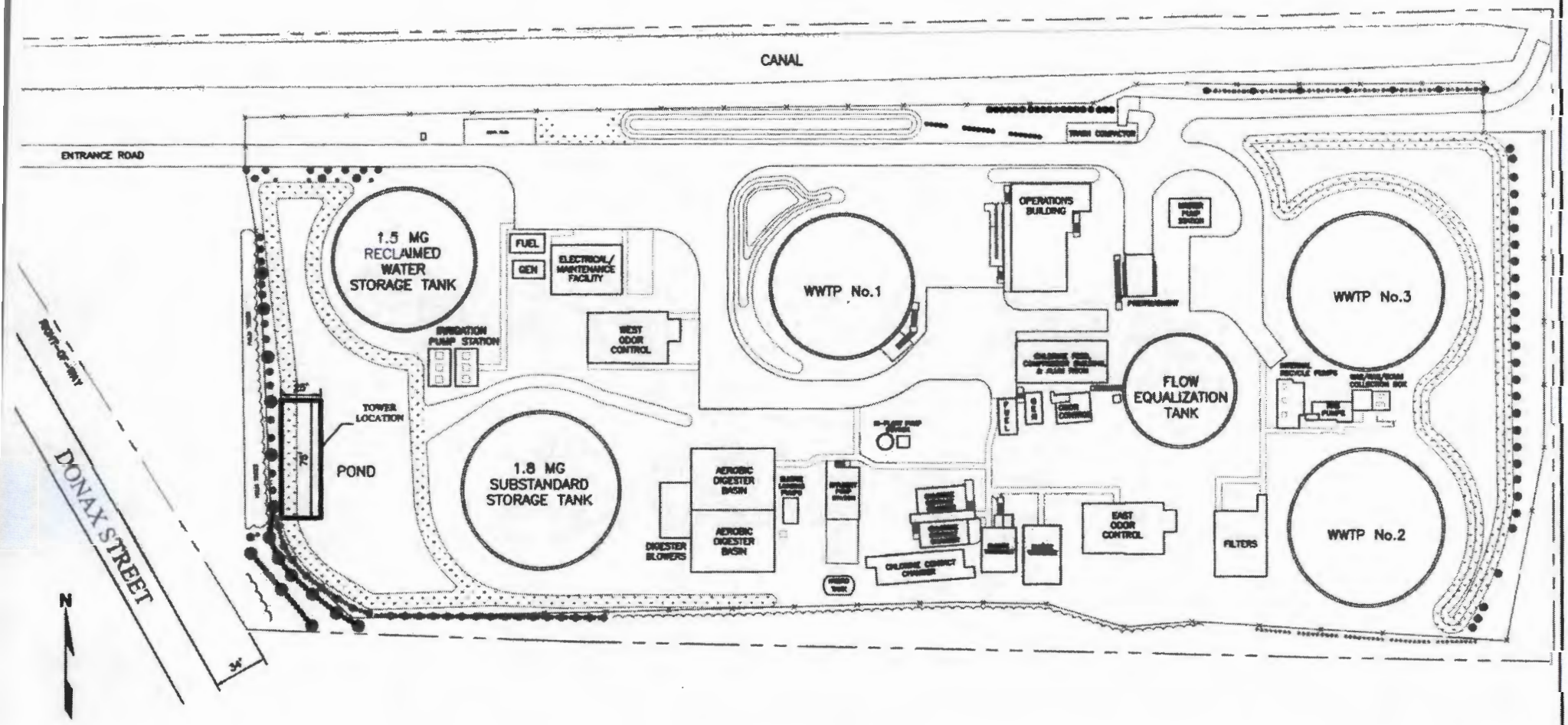

ATTACHMENT "B"

REVISION No.	REVISION	DATE	BY	CHK	APPD

City of Sanibel
800 Dunlop Road
Sanibel, FL 33957

DONAX WASTEWATER RECLAMATION FACILITY

DRAWN BY: JMH	APPROVED BY: GATES D. CASTLE, P.E.	CHECKED BY:
DATE: 2/07/2011	SCALE: 1"=60' PROJECT NO. Donax Phone Tower Location	SHEET NO. 1

Councilman Congress moved, seconded by Councilman Harrity, to accept Option 3.
Public Comment
None

The motion carried.

Matters relating to the Communication Tower approved in Resolution 11-007 to be constructed by Verizon Wireless at the Donax Waste Water Reclamation Facility property
RESOLUTION 12-015 APPROVING A LEASE AGREEMENT BETWEEN THE CITY OF SANIBEL AND VERIZON WIRELESS PERSONAL COMMUNICATIONS, LP, d/b/a VERIZON WIRELESS FOR APPROXIMATELY 1,875 SQUARE FEET OF LAND AT THE DONAX WATER RECLAMATION FACILITY (930 DONAX STREET, SANIBEL) FOR CONSTRUCTION OF A PREVIOUSLY APPROVED COMMUNICATION TOWER; AND PROVIDING AN EFFECTIVE DATE (930 Donax Road)
Direction to Verizon Wireless on two issues pursuant to the requirement of Resolution 11-007 (which approved the communication tower at the Donax site):
Whether the flag pulley system is to be constructed on the inside or the outside of the communication tower (Note: The communication tower is to be constructed with a "stealth design" as a flag pole with antennae on the inside of the pole)
Whether down lighting will be required as part of construction in the event the flying of a flag is authorized at a later date
Ms. Zimomra read the title of Resolution 12-015.

Mr. Cuyler spoke to the following:

- Prior approval of location last year at the Donax plant
- Must enter into a lease of 18,075 square feet of land
- Lease similar to Wulfert Plant
- $25,000 annual payment by Verizon
- 3% escalator
- City also entitled to 50% of sub-leasee lease (other communication companies leasing space)
- 2 items of a planning nature need addressed
- Did not determined whether a flag would be flown or not
- Antenna inside flag pole design
- 1) Would the flag pulley system be constructed on the inside or outside of the flag pole design
- 2) Whether down lighting would be required as part of the construction
- Should be answered by the next City Council meeting

Discussion ensued regarding telecommunication tower close to a neighborhood, pulley system clanging in wind, should insist flag pulley system be inside to minimize noise, needs to have downward lighting if flag was flown at Verizon's expense, Verizon in the audience, Mr. Cuyler noted that because the antenna was inside Verizon had not found a vendor.

Mark Basa, Verizon representative spoke to the outstanding items; 1) pulley system; and 2) down lighting; two design challenges and a pulley system inside with one line outside, spoke to vendor that construct the flag pole design, investigated a pulley system that would be internal and found there would need to have a continuous loop with one line on the outside, then look at an internal mechanism that was a chain driven design that would raise and lower the flag, the design challenge was one hitting the concealment canister each completely removable for each antenna and segments divided into 5 with 5 antennas, but there would be continuous motion once concealment canisters removed there would be no way to attach the chain driven system and would allow a continuous motion for 50 feet, which made this undesirable, the look at a fixed position type flag not removable,

which also had 2 issues; 1) extreme maintenance due to the need of a crane to remove the flag costing about $15,000 to change the flag, as well as a maintenance issue each time the flag needed to be taken down/changed; and 2) 50 feet of segment with no anchors where shrouds would be placed for each antenna, in addition reviewing lighting requirements through the Veterans Affairs Office, down lighting could be engineered, but meeting the requirements for flag lighting as up lighting and no guarantee that light would not spill over to ground operations or impact the neighborhood, tower could be wired in case of a lighting need, noise concern, recommendation not to fly a flag and place a pulley system inside the pole, but would need to be physically strapped, reviewed other markets with a shorter pole and had no restrictions, not saying it could not be done, but would take more investigation on the part of Verizon and the City, since primary function was telecommunication it may not meet the overall goal as discussed previously, flag no flag, how to maintain and if chose not to light there was still the problem of lowering and raising the flag, City could solicit no lighting from Veterans Affairs, decode light or not; time constraints within the lease and need decision within the next 60 days, not nearly as transparent to residents in the beginning, sold residents one thing, but now being told something else, Verizon needs to work harder and exhaust all remedies, tube inside to keep rope, the higher the pole the more diffused the lighting becomes, research was there to show Council the parameters, and Mr. Basa noted that this may not be able to be engineered.

Mr. Cuyler spoke to the following:

- Lease begins a time period
- Could approve lease

Vice Mayor Denham moved, seconded by Mayor Ruane, to adopt Resolution 12-015 and approve the lease.

Public Comment
None.

The motion carried.

COMMITTEES, BOARDS, COMMISSION

City Council Liaison to Planning Commission

February 14, 2012	**Vice Mayor Denham**	**Report 02/0712 CC Meeting**
February 28, 2012	Councilman Harrity	
March 13, 2012	**Councilman Jennings**	**Report 03/06/12 CC Meeting**
March 27, 2012	Councilman Congress	
April 10, 2012	**Mayor Ruane**	**Report 04/03/12 CC Meeting**
April 24, 2012	Vice Mayor Denham	
May 08, 2012	**Councilman Harrity**	**Report 05/01/12 CC Meeting**
May 22, 2010	Councilman Jennings	
June 12, 2012	**Councilman Congress**	**Report 06/05/12 CC Meeting**
June 26, 2012	Mayor Ruane	
July 10, 2012	Vice Mayor Denham	
July 24, 2012	**Councilman Harrity**	**Report July 17, 2012 CC Meeting**

Evaluation Appraisal Report (EAR)
Presentation of Economic Indicators

Ms. Zimomra spoke to the following:

- Provide a number pieces of information
- Changes in state law occurred over the last 2 years and the impact
- Staff recommendation outlined

RESOLUTION NO. 12-015

A RESOLUTION APPROVING A LEASE AGREEMENT BETWEEN THE CITY OF SANIBEL AND VERIZON WIRELESS PERSONAL COMMUNICATIONS, LP, d/b/a VERIZON WIRELESS FOR APPROXIMATELY 1,875 SQUARE FEET OF LAND AT THE DONAX WATER RECLAMATION FACILITY (930 DONAX STREET, SANIBEL) FOR CONSTRUCTION OF A PREVIOUSLY APPROVED COMMUNICATION TOWER; AND PROVIDING AN EFFECTIVE DATE.

WHEREAS, the City owns real property located at 930 Donax Street, Sanibel, upon which is located, in part, the Donax Water Reclamation Facility (the "Donax Site"); and

WHEREAS, pursuant to Section 126-1536 of the Sanibel Land Development Code entitled "Telecommunications Tolerant Areas", the Donax Site has been designated as a Telecommunications Tolerant Area; and

WHEREAS, Verizon Wireless Personal Communications, LP, d/b/a Verizon Wireless ("Verizon") applied for and was granted approval in February 2011 by the Sanibel City Council to construct a telecommunication tower to be placed at the Donax Site; and

WHEREAS, the City Council wishes to provide for the terms and conditions of the lease of City property located at 930 Donax Street to Verizon in the form of the Lease Agreement, attached hereto and incorporated herein;

NOW, THEREFORE, BE IT RESOLVED by City Council of the City of Sanibel, Florida, that:

SECTION 1. The Lease Agreement between the City of Sanibel and Verizon Wireless Personal Communications, LP, d/b/a Verizon Wireless, a copy of which is attached hereto as Exhibit "A" and incorporated herein, is hereby approved and the Mayor is hereby authorized to execute such Lease Agreement on behalf of the City of Sanibel.

SECTION 2. Effective date.

This resolution shall take effect immediately upon adoption.

DULY PASSED AND ENACTED by the Council of the City of Sanibel, Florida this 7th day of February, 2012.

AUTHENTICATION:

Kevin Ruane, Mayor

Pamela Smith, City Clerk

APPROVED AS TO FORM: Kenneth B. Cuyler, City Attorney

Date 1/31/12

Vote of Council Members:

Ruane	yea
Denham	yea
Congress	yea
Harrity	yea
Jennings	yea

Date filed with City Clerk: February 7, 2012

LEASE AGREEMENT
SITE: 68996 – Sanibel Donax WWTP

THIS LEASE AGREEMENT ("Lease"), is made as of this ___ day of _____, 2012, by and between CITY OF SANIBEL, ("Owner"), and VERIZON WIRELESS PERSONAL COMMUNICATIONS LP dba VERIZON WIRELESS, a Delaware limited partnership ("Lessee").

In consideration of the premises and of the mutual obligations and agreements in this Lease, the parties agree as follows:

1. **OWNER'S PROPERTY.** Owner represents and warrants that Owner is the title holder of that certain real property and the improvements thereon commonly known as 930 Donax Street, City of Sanibel, County of Lee, State of Florida ("Owner's Property"), described on the attached Exhibit "A".

2. **LEASE OF PORTION OF OWNER'S PROPERTY; EASEMENTS ACROSS OWNER'S PROPERTY.**

A. Owner hereby leases and demises to Lessee a portion of Owner's Property comprised of approximately 1,875 (25' x 75') square feet of land in the location shown and described on Exhibit "B" ("Leased Property"). Owner also grants and conveys to Lessee nonexclusive easements across the Owner's Property connecting the Leased Property with the nearest public right-of-way and public utility easement (as applicable), for (i) unrestricted vehicular and pedestrian access to the Leased Property and parking on Owner's Property, as needed to install, operate and maintain Lessee's communications facilities, seven (7) days a week, twenty-four (24) hours a day and (ii) installation, location, operation and maintenance of cable runs and utilities including, without limitation, telephone and electric utilities, all as shown and described on Exhibit "B". In the event any public utility is unable to use the aforementioned easement, Owner hereby agrees to grant an additional easement either to Lessee or to the public utility at no cost to Lessee. The Leased Property including, without limitation, the access, cable run and utility easements, may be surveyed by a licensed surveyor, at Lessee's expense. Such survey and/or construction drawings, which shall not vary in any material respect from the easements and Leased Property shown in Exhibit "B", shall then replace Exhibit "B" and become a part hereof.

B. The City of Sanibel is leasing the Leased Property in its proprietary capacity, however, nothing in this Lease shall be construed to prohibit or in any way restrict the City of Sanibel, in its capacity as a local government, from enforcing any and all applicable laws within the City of Sanibel relating to the maintenance, construction and use of Lessee's communications tower. Further, Lessee's compliance with all City of Sanibel conditions of approval set forth in the development permit for Lessee's communication tower (hereinafter referred to as the "Approval Conditions") shall be considered conditions and covenants by Lessee of this Lease, incorporated herein by reference and enforceable under the terms of this Lease, as well. If after issuance of the development permit, Lessee is not satisfied (in Lessee's sole discretion) with the Approval Conditions, then Lessee may elect to terminate this Lease at any time prior to beginning physical construction of the Tower. Once Lessee has begun physical

construction of the Tower, the foregoing right of termination shall be deemed waived.

3. **USE OF THE LEASED PROPERTY.** Lessee and its sublessees and/or licensees may use the Leased Property for the installation, removal, securing, repair, replacement, maintenance and operation of a monopole communications tower (the "Tower") not to exceed One Hundred Forty-Nine (149') feet in height, as measured from the top of the Tower structure and not appurtenances thereon, and associated communications facilities which may include personal communications service, cellular, paging, radio, cable, and other communications facilities comprised of, without limitation, antenna arrays, dishes, cables, wires, equipment shelters, buildings, electronics equipment, generators, fuel tank(s), fencing, utility transformers and lines, cable runs, grounding systems, accessories, all as may be modified, added to or substituted from time to time, to the extent permitted in the applicable City of Sanibel ordinances. The Tower shall be designed and constructed in accordance with the applicable provisions of City of Sanibel Ordinance No. 99-07, codified in the Sanibel Land Development Code as Article XVII, Divisions 1 – 4, Sections 126-1511 through 126-1599, and the Approval Conditions. The final design of the Tower shall be subject to Owner's review and approval (which approval shall not be unreasonably withheld, delayed or conditioned). Further, during the Feasibility Period, as hereinafter defined, and throughout the Lease term, as may be extended, Lessee and its sublessees and/or licensees shall have the right to conduct Feasibility Tests on the Leased Property and Owner's Property, at Lessee's (or sublessee's or licensee's) sole expense.

4. **Intentionally deleted.**

5. **FEASIBILITY PERIOD.** The period of time commencing on the date that this Lease has been executed by both Owner and Lessee ("Execution Date") until the earlier of (i) the date that Lessee commences installation of Lessee's communications facilities on the Leased Property or (ii) sixty (60) days from the Execution Date, shall be referred to herein as the "Feasibility Period". Upon two (2) business days notice to Owner, delivered in accordance with Paragraph 22 of this Lease, Lessee, its agents and contractors shall have the right to enter upon the Owner's Property between 8:00 A.M. and 5:00 P.M. during the Feasibility Period to conduct tests and studies (collectively, "Feasibility Tests"), at Lessee's expense, to determine the suitability of the Leased Property for Lessee's communications facilities and intended use. The Feasibility Tests may include, without limitation, surveys, soils tests, environmental assessments and radio wave propagation measurements. Lessee shall restore the Owner's Property to its original condition, reasonable wear and tear excepted, and at its sole expense upon completion of such Feasibility Tests. In consideration of Owner granting Lessee the right to conduct Feasibility Tests during the Feasibility Period, Lessee agrees to pay Owner the sum of One Hundred Dollars ($100.00) within thirty (30) days of the Execution Date. If Lessee determines in Lessee's sole and absolute discretion, that the Leased Property is not suitable

for Lessee's communications facilities or intended use after conducting any of such Feasibility Tests, Lessee shall have the right to terminate this Lease in accordance with the Provisions of Paragraph 9, prior to the end of the Feasibility Period. From and after the Execution Date, the provisions of this Lease shall be in effect except that the Lease term and obligation to pay rent shall not commence until the Commencement Date. Except as otherwise provided herein, the "Commencement Date" shall be defined as the date that is (i) the first day of the month after the date on which Lessee is granted a building permit by the governmental agency charged with issuing such permits, or (ii) the first day of the month after the date which is 18 months after the Execution Date of this Lease, whichever occurs first. No construction or installation shall occur (other than Feasibility Tests) prior to the date Lessee is granted a development permit and building permit by the City of Sanibel. To the extent that any suit, appeal or other proceeding instituted by third parties against Owner and/or Lessee delays the construction of the Tower or Lessee's ability to operate its equipment from the Tower once constructed, notwithstanding the obtaining of a building permit by Lessee, the Commencement Date shall not occur until the resolution of any such suit, appeal or proceeding, with finality, such date as shall be agreed upon by the parties for purposes of certainty.

6. **TERM; AND EXTENSIONS.**

A. Initial Term. This Lease shall be for an initial term of five (5) years and zero (0) months beginning on the Commencement Date.

B. Extensions. This Lease shall automatically be extended on the same terms and conditions (other than the annual rent which shall escalate in accordance with the provisions of Paragraph 7) for four (4) additional, successive five (5) year extension periods unless Lessee gives Owner written notice of Lessee's intention not to extend this Lease at least one hundred eighty (180) days prior to the end of the then-current term.

C. Requirement for Permit within 12 Months. Notwithstanding any other provision of this Lease, Lessee shall be required to file a completed Building Permit application with the City of Sanibel within 12 months of the Execution Date of this Lease. Failure of Lessee to comply with this provision shall render this Lease null and void and shall require renegotiation and a new review and approval by Lessee and the Sanibel City Council.

7. **RENT.**

A. Initial Rent. Annual rent shall be paid in equal monthly installments in advance beginning on the Commencement Date and on the first (1st) day of each month thereafter to Owner at the address set forth for notices in Paragraph 22 or to such other address as Owner may advise Lessee, in writing, pursuant to the notice provisions of Paragraph 22. The annual rent shall be Twenty-Five Thousand and 00/100 Dollars ($ 25,000.00). The initial monthly rent payment shall be paid within thirty (30) days of the Commencement Date (by way of illustration, if the Commencement Date

is January 1, Lessee shall send to Owner the rent payments for January 1 and February 1 by February 1). Upon agreement of the parties, Lessee may pay rent by electronic funds transfer and in such event, Owner agrees to provide to Lessee bank routing information for such purpose upon request of Lessee.

B. Escalations. Beginning on the first anniversary of the Commencement Date, and annually on each anniversary of the Commencement Date thereafter, the annual rent shall be an amount equal to the annual rent in effect for the immediately preceding one (1) year period, increased by three percent (3%).

C. Rental Documentation. Owner hereby agrees to provide to Lessee certain documentation (the "Rental Documentation") evidencing Owner's interest in, and right to receive payments under, this Lease, including, without limitation, a complete and fully executed Internal Revenue Service Form W-9, or equivalent, in a form acceptable to Lessee, for any party to whom rental payments are to be made pursuant to this Lease. From time to time during the term of this Lease and within thirty (30) days of a written request from Lessee, Owner agrees to provide updated Rental Documentation in a form reasonably acceptable to Lessee. The Rental Documentation shall be provided to Lessee in accordance with the provisions of and at the address given in Paragraph 22. The parties agree and acknowledge that Lessee shall be responsible for the monthly rental payments due under this Lease commencing on the Commencement Date and for each month thereafter throughout the term of this Lease, but that Lessee will be unable to process any rental payments until the Rental Documentation has been supplied to Lessee as provided herein.

Within Thirty (30) days of obtaining an interest in Owner's Property or this Lease, any assignee(s), transferee(s) or other successor(s) in interest of Owner shall provide to Lessee Rental Documentation in the manner set forth in the preceding paragraph.

D. Additional Rent.

(i) In the event Lessee subleases any portion of the Leased Property, any rental paid by any sublessee(s) shall be divided between Owner and Lessee in the following manner: 50% to Owner and 50% to Lessee. Lessee agrees that any such sublessee(s) shall be instructed to pay the foregoing percentage amounts directly to Owner and Lessee. Lessee shall not be responsible to Owner for the collection or payment of rents by the sublessee(s) to Owner, and Lessee shall have no liability to Owner in the event sublessee(s) fail to make such payment(s). Lessee will provide Owner with a tri-party agreement to be executed by Lessee, sublessee(s) and Owner to confirm the direct payment obligation from the sublessee(s) to Owner, to set forth Owner's remedies in the event of non-payment or late payment by sub-lessee and to indicate Owner has been notified of the sublease.

(ii) It is understood and agreed by the parties hereto that the

foregoing rental percentage amounts shall only apply if Lessee is able to accommodate all of the ground space needs of such sublessee(s) facilities within the Leased Property. If Lessee is unable to accommodate all of the ground space needs of any such sublessee(s) within the Leased Property, then such sublessee(s) will be required to obtain the necessary ground space from Owner and will have to enter into a separate agreement with Owner for the necessary ground space within Owner's Property that sublessee(s) requires to locate its facilities. In this event, Lessee shall receive 100% of the rental or fees paid by such sublessee(s) to Lessee for the tower space being leased or licensed from Lessee, and Owner shall receive 100% of the rental or fees paid by such sublessee(s) to Owner for the ground space being leased or licensed from Owner.

8. **APPROVALS; UTILITIES.** Lessee, at Lessee's expense, shall be responsible for (i) obtaining all licenses, certificates, permits and other approvals required by any federal, state or local governmental or quasi-governmental authority for Lessee and its sublessees and/or licensees' use of the Leased Property and/or operation of their respective communications facilities thereon (collectively, "Approvals") and (ii) installing new utilities or upgrading existing utilities on the Leased Property and across the Owner's Property necessary for the operation of its communications facilities and paying for all utilities consumed by Lessee and its sublessees and/or licensees at the Leased Property. Lessee and its sublessees and/or licensees shall either separately meter or sub-meter all utilities consumed by Lessee and its sublessees and/or licensees. Owner agrees to cooperate with Lessee and its sublessees and/or licensees in obtaining and/or maintaining, at no expense to Owner, such Approvals, utility services and easements reasonably required for Lessee's and its sublessees' and/or licensees' use of the Leased Property and/or operation of their respective communications facilities thereon, including, without limitation, the execution of all documents reasonably required for such Approvals, utility services and easements, provided such documents are not inconsistent with the terms of this Lease.

9. **TERMINATION.** Lessee shall have the right to terminate this Lease at any time without further liability hereunder if Lessee determines that any one (1) or more of the following events is occurring or has occurred:

A. Approvals and/or Easement Not Obtainable. All Approvals and/or easements for Lessee's intended use of, or operation or construction of its communications facilities on, the Leased Property cannot be obtained by the Commencement Date; or

B. Approvals and/or Easements Cancelled. Any Approval and/or easement for Lessee's intended use of, or operation or construction of its communications facilities on, the Leased Property is canceled, withdrawn, terminated or denied or expires or lapses; or

C. Ownership; Authority. Owner does not have legal or sufficient

ownership of the Leased Property or the authority to enter into this Lease; or

D. Hazardous Material. Within thirty (30) days of learning that the Owner's Property contains a Hazardous Material, as defined in Paragraph 14, not introduced to the Property by Lessee or one of its sublessees or licensees and not discovered or discoverable during the performance of a Phase I environmental study of the Property during the Feasibility Period; or

E. Title. The status of the title to the Leased Property is unacceptable, in Lessee's sole discretion, prior to the Commencement Date; or

F. Feasibility. Based on the results of any Feasibility Tests conducted during the Feasibility Period, the Leased Property is not suitable for Lessee's intended use or the operation or construction of its communications facilities, in Lessee's sole and absolute discretion.

G. Technical Compatibility. Lessee determines that the Leased Property is no longer technically compatible for its intended use.

H. Annual Termination. Upon each annual anniversary of the Commencement Date, provided Lessee has notified Owner in writing pursuant to Section 22 of this Lease of Lessee's intent to terminate at least 120 days prior to such termination.

I. Loss of Approvals. In the event any Approval necessary for Lessee's continued operations at the Leased Property is canceled through no fault of Lessee.

J. Other. In the event construction of the Tower or Lessee's ability to operate its equipment from the Tower once constructed is delayed due to any suit, appeal or other proceeding instituted by third parties against Owner and/or Lessee, and Lessee determines that resolution of any such suit, appeal or proceeding, with finality, will not occur in a timely manner.

Under any of the above circumstances, Lessee may terminate this Lease by giving Owner written notice thereof delivered in accordance with the provisions of Paragraph 22. If Lessee elects to terminate this Lease pursuant to this Paragraph 9, this Lease shall terminate as of the date set forth in the notice of termination sent by Lessee to Owner, which date shall not be more than one hundred twenty (120) days from the date of such notice. Within thirty (30) days after such termination, Owner shall pay to Lessee any prepaid annual rent that has not accrued as of the date of such termination. Owner's obligation to pay the foregoing rental amount shall survive termination of this Lease.

10. **ASSIGNMENT; SUBLEASE; LICENSE.**

A. This Lease may be sold, assigned or transferred by Lessee without any approval or consent of Owner to Lessee's principal(s), affiliates, or any subsidiary of Lessee, its principal(s) or affiliates; to any entity which acquires all or substantially all of Lessee's assets in the market defined by the Federal Communications

Commission in which the Owner's Property is located by reason of a merger, acquisition or other business reorganization; or to any entity which acquires or receives an interest in the majority of communication towers of Lessee in the market defined by the Federal Communications Commission in which the Owner's Property is located. As to other parties, this Lease may not be sold, assigned or transferred without the written consent of Owner, which such consent will not be unreasonably withheld, delayed or conditioned. No such assignment to third parties shall relieve Lessee of its obligations hereunder for the remaining portion of the then-current lease term. Further, any such sale, assignment or transfer, even made with the written consent of Owner, shall be made specifically subject to all applicable City of Sanibel Ordinances, Resolutions and the Approval Conditions. Notwithstanding anything herein to the contrary, no change of stock ownership, partnership interest or control of Lessee or transfer upon partnership or corporate dissolution of Lessee shall constitute an assignment hereunder.

B. Notwithstanding the foregoing, Lessee may sublease any portion of the Leased Property at its sole discretion, upon notice to Owner, provided that such sublease complies with all applicable requirements of City of Sanibel Ordinance 99-07, codified in the Sanibel Land Development Code as Article XVII, Divisions 1 – 4, Sections 126-1511 through 126-1599, and the Approval Conditions. Any sublease that is entered into by Lessee shall be subject to the provisions of this Lease and shall be binding upon the successors, assigns, heirs and legal representatives of the respective parties hereto. To the extent that any renewal periods under this Lease are included in the term of any such sublease, the sublease shall be conditioned on the extension of this Lease, and shall automatically terminate upon the non-renewal, expiration or early termination of this Lease. The term "sublease", "sublet", "sublessee" and any other similar term shall apply to any situation by which Lessee allows a third party use of the Leased Property for co-location, whether it be by formal sublease, license or other agreement. All rights and responsibilities of Lessee set forth in this Lease shall be enjoyed by and binding on any sublessee. Such sublease shall not act to relieve Lessee of its obligations hereunder.

C. Material to Owner's decision to enter into this Lease is Lessee's representation and warranty that it will comply with all applicable provisions of City Ordinance 99-07, and the Approval Conditions including, but not limited to, the obligation to allow for co-location on the Tower constructed on the Leased Property at reasonable rates and subject to the terms hereof. Provided that Lessee is not in violation of these or any other requirements of the Ordinance, Lessee shall have the sole right to determine whether it will allow any specific sublessee, other than Owner, to co-locate on the Tower.

11. **INDEMNIFICATION AND INSURANCE.**

A. Indemnification by Lessee. Lessee hereby agrees to indemnify and hold Owner and Owner's officials, partners, affiliates, agents and employees harmless from and against

any and all liabilities, claims, demands, action, losses, damages, orders, penalties, costs and/or expenses including, without limitation, reasonable attorneys fees and costs resulting from: (i) personal injury or property damage arising out of the acts or omissions of Lessee, its agents and/or employees in any way relating to the Leased Property; (ii) Lessee's breach of any covenants or provisions of this Lease to be observed or performed by Lessee and failure to cure such breach after the expiration of all applicable cure periods; (iii) any damages or causes of action arising out of or relating to Lessee's, or any of its sublessees' or licensees' use of the Leased Property or Owner's Property under this Lease; and/or (iv) personal injury or property damage arising out of a failure or collapse, for any reason, of the Tower or attached facilities (except any of Owner's equipment) to be constructed on the Leased Property. Notwithstanding any of the foregoing, Lessee shall have no obligation to indemnify and hold Owner and Owner's officials, partners, affiliates, agents and employees harmless from and against any liabilities, claims, demands, actions, losses, damages, orders, penalties, costs and/or expenses to the extent resulting from the negligence or willful misconduct of Owner, its officials, partners, affiliates, agents or employees. The obligations of Lessee under this Paragraph 11.A shall survive termination or expiration of this Lease.

B. Lessee's Insurance. Lessee shall carry comprehensive general liability insurance with limits of liability thereunder of not less than $2.5 million combined single limit for bodily injury and/or property damage, including coverage for contractual liability (subject to standard policy exclusions). Such insurance shall name Owner, as an additional insured with respect to the Leased Property and related easements, shall be issued by an insurance company authorized to do business in the state in which the Leased Property is located and shall provide thirty (30) days prior written notice to Owner of any cancellation of such policy. On or before the Commencement Date, Lessee shall deliver to Owner a certificate evidencing that such insurance is in effect, and, thereafter, within ten (10) business days of Owner's request for any such certificate. Any insurance required to be provided by Lessee under this Paragraph 11.B. may be provided by a blanket insurance policy covering the Leased Property and easements and other properties of Lessee, provided such blanket insurance policy complies with all of the other requirements of this Lease with respect to the type and amount of insurance required.

C. Owner's Insurance. To the extent permitted by law, Owner shall carry comprehensive general liability insurance with limits of liability thereunder of not less than $2.5 million combined single limit for bodily injury and/or property damage, including coverage for contractual liability (subject to standard policy exclusions), covering Owner's Property. Such insurance shall be issued by an insurance company authorized to do business in the state in which the Owner's Property is located. On or before the Commencement Date, Owner shall deliver to Lessee a certificate evidencing that such insurance is in effect, and, thereafter, within ten (10) business days of Lessee's request for any such

certificate. Any insurance required to be provided by Owner under this Paragraph 11.C. may be provided by a blanket insurance policy covering the Owner's Property and other properties of Owner, provided such blanket insurance policy complies with all of the other requirements of this Lease with respect to the type and amount of insurance required.

12. **EVENT OF DEFAULT.**

A. Event of Default by Lessee. The occurrence of any one (1) or more of the following events shall constitute an "Event of Default" hereunder by Lessee:

(i) The failure by Lessee to make any payment of rent or any other payment required to be made by Lessee hereunder, as and when due, where such failure continues for a period of fifteen (15) days after Lessee's receipt of written notice thereof from Owner.

(ii) The failure by Lessee to observe or perform any of the covenants or provisions of this Lease to be observed or performed by Lessee, other than as specified in Paragraph 12.A.(i), where such failure continues for a period of thirty (30) days after Lessee's receipt of written notice thereof from Owner; provided, however, that it shall not be an Event of Default by Lessee if Lessee commences to cure such failure within such thirty (30) day period and thereafter diligently and expeditiously prosecutes such cure to completion.

B. Event of Default by Owner. The occurrence of any one (1) or more of the following events shall constitute an Event of Default hereunder by Owner:

(i) The failure by Owner to observe or perform any of the covenants or provisions of this Lease to be observed or performed by Owner, where such failure continues for a period of thirty (30) days after written notice thereof is given to Owner, provided, however, that it shall not be an Event of Default by Owner if Owner commences to cure such failure within such thirty (30) day period and thereafter diligently and expeditiously prosecutes such cure to completion, provided, further, Owner shall not be granted more than thirty (30) days to cure a monetary breach of this Lease.

(ii) If Owner defaults or an event of default occurs under any mortgage, deed of trust, any lease under which Owner holds title to any portion of Owner's Property, or any other similar encumbrance and such default or event of default adversely affects Lessee's and/or its sublessees' and/or licensees' use of the Lease Property or the operation of Lessee's and/or its sublessees' and/or licensees' communications facilities on the Leased Property.

(iii) A voluntary or involuntary petition in bankruptcy is filed by or against Owner, or Owner becomes insolvent (meaning, unable to pay his, her or its debts as they become due), or Owner makes a transfer or conveyance in constructive or actual fraud of creditors or makes a general arrangement or general assignment for the benefit of creditors.

C. Remedies Upon Default. If an Event of Default occurs by Lessee or Owner, the non-defaulting party shall have all remedies available to it in law or equity, including without limitation the right to terminate this Lease. In the event Lessee terminates this Lease due to an Event of Default by Owner, then within thirty (30) days after such termination, Owner shall pay to Lessee any prepaid annual rent that has not accrued as of the date of such termination. Owner's obligation to pay the foregoing rental amount shall survive termination of this Lease.

13. **SALE OR TRANSFER BY OWNER.** Should Owner, at any time during the term of this Lease, as may be extended, sell, lease, transfer or otherwise convey all or any portion of Owner's Property to any transferee other than Lessee, such sale, lease, transfer or other conveyance shall be subject to this Lease and all of Lessee's rights hereunder.

Should Owner at any time during the term of this Lease decide to grant to a third party by easement or other legal instrument an interest in and to the Leased Property for the purpose of operating and maintaining communications facilities or the management thereof, such sale or grant of an easement or interest therein shall be under and subject to this Lease and any such purchaser or transferee shall recognize Lessee's rights hereunder. To the extent that Owner grants to a third party by easement or other legal instrument an interest in and to the Leased Property for the purpose of operating and maintaining communications facilities or the management thereof and in conjunction therewith, assigns this Lease to said third party, if the third party agrees in such legal instrument to undertake all of Owner's obligations under this Lease, Owner shall be released from its obligations to Lessee under this Lease and Lessee shall have the right to look to the third party for the full performance of this Lease. Only in the event that such legal transfer document does not require said third party to undertake all of Owner's obligations under this Lease, shall Owner remain liable under this Lease.

14. **HAZARDOUS SUBSTANCES.**

A. Lessee shall undertake an environmental study, at Lessee's sole expense, during the Feasibility Period, to the extent necessary to satisfy itself with respect to the presence of any Hazardous Substances on or near the Leased Property. Lessee hereby agrees that it will not use, store or dispose of any Hazardous Substances at or near the Leased Property in violation of any applicable federal, state or local laws or regulations. For purpose of this provision, "Hazardous Substances" include any substance identified as hazardous, toxic, or dangerous in any applicable federal, state, or local law or regulation, including petroleum products. Lessee agrees to indemnify and hold Owner harmless from any cost, liability or expense (including without limitation, cost of cleanup or fines, reasonable attorney fees, and court or administrative proceedings) incurred on account of contamination of the Owner's Property or Leased Property by any Hazardous Substance used, stored or disposed of by Lessee. Lessee's

obligations under this Paragraph 14 shall survive the termination, for any reason, or expiration of this Lease.

B. Owner represents and warrants that it has no knowledge of any Hazardous Substances on the Owner's Property, except those substances and materials which are used, regularly or intermittently, as part of Owner's municipal sewage treatment plant operation located on Owner's Property, which is acknowledged by Lessee to be the primary and ongoing use for Owner's_Property. Owner shall be responsible for all obligations of compliance with any and all environmental and industrial hygiene laws, including any regulations, guidelines, standards, or policies of any governmental authorities regulating or imposing standards of liability or standards of conduct with regard to any environmental or industrial hygiene conditions or concerns as may now or at any time hereafter be in effect, that are or were in any way related to activity now conducted in, on, or in any way related to the Owner's Property, unless such conditions or concerns are caused by the activities of Lessee. To the extent permitted by law, Owner shall hold Lessee harmless and indemnify Lessee from and assume all duties, responsibility and liability at Owner's sole cost and expense, for all duties, responsibilities, and liability (for payment of penalties, sanctions, forfeitures, losses, costs, or damages) and for responding to any action, notice, claim, order, summons, citation, directive, litigation, investigation or proceeding which is in any way related to: (i) Owner's failure to comply with any environmental or industrial hygiene law, including without limitation any regulations, guidelines, standards, or policies of any governmental authorities regulating or imposing standards of liability or standards of conduct with regard to any environmental or industrial hygiene concerns or conditions as may now or at any time hereafter be in effect, unless such compliance results from conditions caused by Lessee; and (ii) any environmental or industrial hygiene conditions arising out of or in any way related to the condition of the Owner's Property or activities conducted thereon, unless such environmental conditions are caused by Lessee. Owner's obligations under this Paragraph 14 shall survive the termination, for any reason, or expiration of this Lease.

15. **CONDEMNATION.**

A. Entire Condemnation. In the event the whole of Owner's Property, including, without limitation, the Leased Property, shall be permanently taken or condemned for public purposes, or sold to a condemning authority under threat of condemnation to prevent taking, this Lease shall automatically terminate as of the day of the taking, condemnation or sale.

B. Partial Condemnation. In the event any portion of the Leased Property shall be permanently taken or condemned for public purposes, or sold to a condemning authority under threat of condemnation to prevent taking, and as a result of such taking, condemnation or sale, Lessee determines, in its sole discretion, that it can not continue operation of its communications facilities, then Owner agrees that Lessee may use and/or construct upon an alternate portion of Owner's Property

which is equally suitable for Lessee's purposes, provided such alternate portion is available and will not interfere with Owner's other use of Owner's Property at that time. The location of the alternate portion of Owner's Property to which Lessee may relocate shall be mutually determined by Owner and Lessee. If an alternate portion of Owner's Property is available and acceptable to both Owner and Lessee, then Owner and Lessee shall enter into an amendment to this Lease designating such alternate portion of Owner's Property as the Leased Property. In the event no alternate portion of the Owner's Property is agreeable to both Lessee and Owner, this Lease shall automatically terminate as of the day of the taking, condemnation or sale.

C. Notwithstanding anything contained in Paragraphs 15.A. or 15.B. to the contrary, in the event of any taking, condemnation or sale in lieu of a taking of the Owner's Property, Lessee may terminate this Lease upon fifteen (15) days written notice to Owner if such condemnation may reasonably be expected to disrupt Lessee's operations at the Leased Property for more than forty-five (45) days.

D. Condemnation Award. Owner shall receive the entire condemnation award for the land and such other improvements as are owned by Owner, and Lessee hereby expressly assigns to Owner any and all right, title and interest of Lessee now or hereafter arising in and to any such award. Notwithstanding the foregoing, Lessee shall have the right to recover from such authority, but not from Owner, any compensation as may be awarded to Lessee on account of Lessee's leasehold interest, moving and relocation expenses, interruption of business and depreciation to and removal of the personal property and fixtures of Lessee.

D. Rebate of Rent. If this Lease is terminated pursuant to the provisions of Paragraphs 15.A., 15.B., or 15.C., Owner shall, within thirty (30) days after the termination date, reimburse to Lessee any prepaid rent that has not accrued as of the termination date, and all rights and obligations of Owner and Lessee arising after the date of termination shall terminate, except as specifically set forth in this Lease. The Owner's obligation under this subparagraph shall survive termination or expiration of this Lease.

16. **LIENS.**

A. Mechanics' Liens. Lessee shall keep the Leased Property free from any liens arising out of any work performed, materials furnished, or obligations incurred by or for Lessee, its sublessees or licensees. Lessee shall, within twenty (20) days of Lessee's receipt of written notice from Owner of the imposition of such lien, (i) cause the same to be released of record by payment or (ii) deliver to Owner a bond in the amount of one hundred ten percent (110%) of the amount of the lien. Upon delivery of the bond to Owner, Lessee may contest the validity of the lien. Once the lien is released of record, any bond provided by Lessee to Owner shall be released and returned to Lessee. No work which Owner permits Lessee to perform on the Lease Property shall be deemed to be for the

use of benefit of Owner so that no mechanics or other lien shall be allowed against the estate of Owner by reason of its consent to such work. Owner shall have the right to post notices that it is not responsible for payment for any such work.

17. **TAXES; MAINTENANCE.**

A. Taxes. Lessee shall be responsible for paying all personal property taxes assessed directly upon Lessee's communications facilities, and requiring that its sublessees and licensee's pay all personal property taxes assessed directly upon its sublessee's or licensee's communications facilities, located on the Leased Property. Lessee also shall be responsible for paying to Owner, as additional rent, all applicable real estate taxes assessed directly upon the Leased Property (including any portion of such taxes attributable to Lessee's communications facilities) within thirty (30) days of Lessee's receipt from Owner of a tax bill evidencing such taxes, and Owner shall pay such taxes to the appropriate governmental authorities upon receipt of such funds from Lessee. Lessee shall pay to Owner, all applicable sales taxes levied against the annual rent paid by Lessee to Owner, and Owner shall pay such sales taxes to, and file all required forms with, the appropriate governmental authorities upon receipt of such sales taxes levied against Owner's income derived from the Leased Property. Lessee shall have the right, at its sole option and at its sole cost and expense, to appeal, challenge or seek modification of any real estate tax assessment or billing for which Lessee is wholly or partly responsible for payment under this Lease. Owner shall reasonably cooperate with Lessee in filing, prosecuting and perfecting any appeal or challenge to real estate taxes as set forth in the preceding sentence, including but not limited to, executing any consent to appeal or other similar document.

B. Maintenance. Lessee, at Lessee's expense, shall be responsible for maintaining, repairing and replacing Lessee's communications facilities located on the Leased Property and shall cause its sublessees and/or licensees to maintain, repair and replace their respective communications facilities located on the Leased Property. All maintenance, repairs, and replacement required pursuant to this paragraph 17.B. shall be performed in good and workmanlike manner and shall be in compliance with all Governmental Laws, as defined in Paragraph 23.C. Owner will maintain the Owner's Property, excluding the Leased Property, in good condition, reasonable wear and tear excepted.

18. **QUIET ENJOYMENT AND NON-INTERFERENCE.**

A. Quiet Enjoyment. Owner represents, warrants and agrees that Lessee, upon paying the rent and performing the covenants and provisions in this Lease to be observed or performed by Lessee shall peaceably and quietly have and enjoy the Leased Property.

B. Interference. Lessee will examine the Property during the Feasibility Period to ensure that no existing use of the Property will interfere with Lessee's authorized use under this

Lease. Owner shall not cause, permit or allow any other use of, or condition on, Owner's Property, not existing as of the Execution Date, which causes measurable interference with or impairs (i) the communications facilities of, including the signal strengths of antennas operated by Lessee or its sublessees and/or licensees from the Leased Property or (ii) the use of the Leased Property by Lessee and/or its sublessees and/or licensees. If any such interference occurs, Owner agrees to eliminate or cause the elimination of such interference with Lessee's or its sublessees' and/or licensees' operations of their respective communications facilities, including the signal strength of their antennas and/or use of the Leased Property within ten (10) days after Owner's receipt of Lessee's written notice of such interference and, if necessary, to cause the interfering party to cease operating the facilities causing the interference. Nothing herein shall be read to require Owner to have any duty with respect to Lessee, any sublessee or licensee for any interference caused thereto from any use by Owner that predates the deployment of the specific equipment and/or frequencies that are causing or being caused measurable interference.

19. **RIGHTS TO EQUIPMENT; CONDITION ON SURRENDER.**

A. Personal Property. The communications facilities, equipment, improvements (including without limitation the Tower), fixtures and other property of Lessee and its sublessees and/or licensees on the Leased Property shall be and remain the personal property of Lessee and/or its sublessees and/or licensees, even though some of it may be permanently affixed to the land, and Lessee and its sublessees and/or licensees shall be entitled to take or remove all or any portion of their respective communications facilities, equipment, improvements, fixtures and other property from the Leased Property without any hindrance by, through, or under Owner or the holder of any mortgage, deed of trust, ground lease or other encumbrance. Owner expressly waives all rights of levy, distraint or execution with respect to Lessee's and its sublessees' and/or licensees' property, including without limitation any statutory or common law security interest or landlord's lien for rent. Within ninety (90) days after the termination or expiration of this Lease, Lessee and its sublessees and/or licensees shall have the obligation to remove all or any part of their respective communications facilities, equipment, improvements, fixtures and other property from the Leased Property, except Lessee shall have no obligation to remove the Tower footings. Lessee or its sublessees and/or licensees shall repair or cause to be repaired any damage caused by such removal, and shall otherwise surrender the Leased Property in good condition, ordinary wear and tear, reimbursed damage by fire and other casualty excepted. Any of Lessee's or its sublessees' and/or licensees' communications facilities, equipment, improvements, fixtures and other property that has not been removed from the Property within said ninety (90) day period shall be deemed abandoned by Lessee or its sublessees and/or licensees. At such time, Owner may elect to either retain such property as its own (in which case Lessee shall execute all documentation reasonably requested by owner to formally transfer title of such property to Owner), or have

such property removed and the Leased Property and easement areas restored to the condition required above at Lessee's sole expense. Notwithstanding any other provision of this Lease, Owner may require, upon written notice to Lessee, that the Tower and Owner's emergency broadcasting equipment remain on the Lease Property, and Lessee shall execute all documentation reasonably requested by owner to formally transfer title of such property to Owner. To the extent any such transfer of the Tower were to occur on or before Fifteen (15) years after the Commencement Date, Owner shall pay to Lessee the fair market value of any assets transferred to Owner.

20. **BROKERS.** Owner and Lessee each represent and warrant to the other that he, she or it has not negotiated with any broker or agent, real estate or otherwise, in connection with this Lease. Owner and Lessee each agrees that, if any claim is made against the other for a broker's or agent's commission, finder's fee or the like by reason of the acts of the first party, then the first party shall indemnify (with respect to Owner, to the extent permitted by law) and hold the other harmless from and against any and all liabilities, claims, demands, actions, losses, damages, orders, penalties, costs and/or expenses, including, without limitation, reasonable attorneys fees incurred in connection therewith and shall defend such action by legal counsel reasonably acceptable to the other.

21. **ESTOPPEL CERTIFICATES.**

A. Owner. Owner, at the request of Lessee, shall provide Lessee with a certificate stating: (i) whether Owner has any claim against Lessee and if so, stating the nature of such claim; (ii) that Owner recognizes Lessee's ownership of Lessee's communications facilities and other property; (iii) that Lessee has the right to remove Lessee's communications facilities and other property from the Leased Property notwithstanding that such may be considered a fixture under local law except as otherwise provided in Paragraph 19.A.; (iv) whether an Event of Default by Lessee has occurred or would occur with the giving of notice and/or the passage of time; and (v) that Owner has no interest in and disclaims any interest to Lessee's communications facilities and other property, except such interest as may be granted pursuant to Paragraph 19.A, or to the extent of Owner's communication and associated equipment that may be placed on the Tower or on the Leased Property.

B. Lessee. Lessee, at the request of Owner, shall provide Owner with a certificate stating: (i) that this Lease is unmodified and in full force and effect (or, if there has been any modification, that the same is in full force and effect as modified and stating the modification); (ii) whether or not, to Lessee's knowledge, any set-offs, or defenses exist against the enforcement of any of the agreements, terms covenants or conditions hereof to be performed or complied with by Lessee (and if so specifying the same); and (iii) the date through which the rent has been paid.

22. **NOTICES.** Any notice, request or demand required or permitted to be given pursuant to this Lease shall be in writing and shall be deemed sufficiently

given if (i) delivered by messenger at the address of the intended recipient, (ii) sent prepaid by next-work-day Federal Express (or a comparable guaranteed overnight delivery service), or (iii) deposited in the United States first class mail (registered or certified, postage prepaid, with return receipt requested). Any such notice, request, or demand so given shall be deemed given on the day it is delivered by messenger, on the next-work-day after the day of deposit with Federal Express (or a comparable overnight delivery service), or on the day that is two (2) business days after deposit in the United States Mail, as the case may be.

Lessee:

Verizon Wireless Personal Communications LP
dba Verizon Wireless
180 Washington Valley Road
Bedminster, NJ 07921
Attention: Network Real Estate

Owner:

City of Sanibel
c/o City Manager
800 Dunlop Road
Sanibel, Florida 33597
Telephone: (239) 472-3700

Copy to City Attorney:
Kenneth B. Cuyler, Esq.
800 Dunlop Road
Sanibel, Florida 33957
Telephone: (239) 472-4359

Any party may change his, her or its address for notice purposes by giving notice in accordance with this Paragraph 22.

23. **MISCELLANEOUS PROVISIONS.**

A. Title; Undisclosed Liens. Owner represents, warrants and agrees that Owner is seized of good and sufficient title to and interest in the Owner's Property and has full authority to enter into and execute this Lease and no undisclosed liens, judgments or impediments of title exist on Owner's Property that would affect this Lease. Owner further represents, warrants and agrees that there are no covenants, easements, restrictions or agreements binding on Owner or the Owner's Property which prevent the use of the Leased Property by the Lessee and its sublessees and/or licensees, as set forth in this Lease.

B. Entire Lease; Amendments. This Lease, including the exhibits and attachments which are attached hereto and incorporated herein by this reference, incorporates all agreements and understandings between Owner and Lessee. No prior or other verbal agreements or understandings shall be binding upon Owner or Lessee, and any addition, amendment, variation or modification to this Lease shall be ineffective unless made in writing and signed by Owner and Lessee.

C. Compliance with Governmental Laws. Owner represents, warrants and agrees that throughout the term of this Lease, as may be extended, the Owner's Property including, without limitation, the Leased Property and all improvements thereon, other than improvements owned by Lessee or its sublessees and/or licensees, shall be in compliance with all laws, codes, and

regulations of all federal, state and local governmental or quasi-governmental authorities (collectively, "Governmental Laws"). Lessee agrees that any improvements constructed on the Leased Property by Lessee and/or its sublessees and/or licensees and the operation of the communications facilities of Lessee and/or its sublessees and/or licensees on the Leased Property shall be in compliance with all Governmental Laws.

D. Governing Law. This Lease and the performance hereof shall be governed, interpreted, construed and regulated by the laws of the State of Florida.

E. Benefit. This Lease, and each and every covenant and condition herein, is intended to benefit the Leased Property and to run with the Owner's Property and shall extend to and bind the heirs, personal representatives, successors and assigns of the parties hereto.

F. Covenants and Conditions. The parties agree that all of the provisions hereof shall be construed as both covenants and conditions, the same as if the words importing such covenants and conditions has been used in each separate Paragraph.

G. Construction. The parties acknowledge that each has had an opportunity to review and negotiate this Lease and has executed this Lease only after such review and negotiation. The language of this Lease shall be construed simply and according to its fair meaning, and this Lease shall not be construed more strictly in favor or against either party.

H. Nondisturbance Agreement. At Owner's option, this Lease shall be subordinate to any mortgage or deed of trust which from time to time may encumber all or any part of the Owner's Property, provided that every such mortgagee, beneficiary, trustee, or other holder having rights thereunder agrees to recognize (in writing and in a form reasonably acceptable to Lessee's counsel) the validity of this Lease and Lessee's rights under this Lease, including without limitation Lessee's right to remain in occupancy and have access to the Leased Property, as long as Lessee is not then in default of this Lease beyond any applicable notice and cure period, in the event of a foreclosure or the exercise of any other remedies under any such mortgage or deed of trust. Lessee shall execute whatever instruments may reasonably be required to evidence this subordination. If, as of the date of execution of this Lease, any mortgage, deed of trust, ground lease or other similar encumbrance affects Owner's Property, Owner agrees to obtain from the holder of such mortgage, deed of trust, ground lease, or other encumbrance a written agreement that Lessee shall not be disturbed in its possession, use and enjoyment of the Leased Property as long as an Event of Default by Lessee has not occurred hereunder.

I. Severability. If any portion of this Lease is declared by an arbitrator or arbitrators, or any court of competent jurisdiction, to be invalid or unenforceable, such portion shall be deemed modified to the extent necessary in such arbitrator's or arbitrators', or any court of competent

jurisdiction's opinion to render such portion enforceable, and, as so modified, such portion and the balance of this Lease shall continue in full force and effect.

J. Enforcement. If either party institutes any action or proceeding in arbitration to enforce any provision hereof, or any action in any court of competent jurisdiction for damages for any alleged breach of any provisions hereof, the prevailing party in such action or proceeding, in addition to any other award given by the arbitrator(s), or court, shall be entitled to receive from the non-prevailing party such amount as the arbitrator(s), or court, may adjudge to be reasonable attorneys' fees for the services rendered to the prevailing party, together with its other reasonable litigation expenses.

K. Injunctive Relief. In addition to the other remedies provided for in this Lease, any party shall be entitled to immediate restraint by injunction of any violation of any of the covenants, conditions or provisions of this Lease.

L. Headings. The captions of the Paragraphs of this Lease are for convenience of reference only and shall not affect the interpretation of this lease.

M. Lighting of Communications Facilities. Lessee covenants that as of the Execution Date it has made a determination that no laws or regulations of the Federal Aviation Administration (FAA), Federal Communications Commission (FCC) or any other governmental agency or body require or recommend the lighting and/or marking of the Tower, and that no lighting will in fact be placed on the Tower, and that the absence of such lighting is a material condition of this Lease. Notwithstanding the foregoing, in the event there is a change in any laws, rules or regulations promulgated by the FAA, FCC or any other governmental agency or body, such that lighting and/or marking of the Tower is required, then Lessee shall comply with such requirement, and compliance therewith shall not be deemed a breach of this Lease. Any lighting of ground facilities on the Leased Property shall be in accordance with Owner's ordinances, resolutions, rules and regulations and requisite building permits.

N. Memorandum of Lease. Concurrently with the execution of this Lease, Owner shall execute before a notary and deliver to Lessee for recording a "Memorandum of Lease Agreement", also referenced as "Short Form Lease", in the form of the attached Exhibit "C." Such Memorandum shall not disclose any financial terms, unless required to do so by the laws of the jurisdiction in which such Memorandum is recorded.

O. Arbitration. Any controversy or claim arising out of or relating to this Lease, or the breach of this Lease, may be settled by arbitration in accordance with the rules and regulations of the American Arbitration Association and in accordance with the Florida Arbitration Code, and judgment upon the award rendered by the arbitrator(s) may be entered in any court having jurisdiction thereof. The decision of the arbitrator(s) shall be final and non-appealable. The place of arbitration shall be Fort Myers, Florida. Arbitration shall be an option upon mutual

agreement of the parties and shall not be construed as a requirement of this Lease.

P. Waiver. The failure of either party hereto to insist upon strict performance of any of the terms or conditions of this Lease or to exercise any of its rights under this Lease shall not waive such rights and such party shall have the right to enforce such rights at any time and take such action as may be lawful and authorized under this Lease, either in law or in equity.

Q. Casualty. In the event of damage by fire or other casualty to the Leased Property that cannot reasonably be expected to be repaired within forty-five (45) days following same or, if the Owner's Property is damaged by fire or other casualty so that such damage may reasonably be expected to disrupt Lessee's operations at the Leased Property for more than forty-five (45) days, then Lessee may at any time following such fire or other casualty, provided Owner has not completed the restoration required to permit Lessee to resume its operation at the Leased Property, terminate this Lease upon fifteen (15) days written notice to Owner. Any such notice of termination shall cause this Lease to expire with the same force and effect as though the date set forth in such notice were the date originally set as the expiration date of this Lease, and Owner shall, within thirty (30) days after the termination date, reimburse to Lessee any prepaid rent that has not accrued as of the termination date. The Owner's obligation under this subparagraph shall survive termination or expiration of this Lease. Notwithstanding the foregoing, all rental under this Lease shall abate during the period of such fire or other casualty.

R. Emergency removal of collapsed Tower or other facilities. In the event of a natural disaster such as a hurricane, Owner shall make reasonable attempts to notify Lessee in the event that Lessee's Tower has been damaged or has collapsed. However, in the event that such emergency condition exists and Lessee's Tower or other facilities have collapsed onto Owner's sewer treatment facility, public right-of-way or other public facilities which require the immediate removal of such facilities, it is acknowledged by Lessee that Owner shall remove such Tower and facility in the event that Lessee is unable to do so within the emergency time-frame established by Owner. Under such circumstances, Owner shall have no liability for any additional damage or destruction to Lessee's Tower or other facilities.

S. Submission of Lease. The submission of this Lease for examination does not constitute an offer to lease the Leased Property and this Lease becomes effective only upon the full execution of this Lease by Owner and Lessees.

T. Authority to Execute. Each of the parties hereto warrants to the other that the person or persons executing this Lease on behalf of such party has the full right, power and authority to enter into and execute this Lease on such party's behalf and that no consent from any other person or entity is necessary as a condition precedent to the legal effect of this Lease.

IN WITNESS WHEREOF, the parties have executed this Lease.

OWNER: City of Sanibel

By: _____
Kevin Ruane, Mayor
800 Dunlop Road
Sanibel, Florida 33957

ATTEST: _____
Pamela Smith, City Clerk

APPROVED AS TO FORM:

Kenneth B. Cuyler, City Attorney

Date: _____

LESSEE:

Verizon Wireless Personal Communications LP
dba Verizon Wireless

By: _____
Name: Hans F. Leutenegger
Title: Area Vice President Network

Address: One Verizon Way
Mail Stop 4AW100
Basking Ridge, NJ 07920

Date: _____

Witnesses:

By: _____ By: _____
Name: _____ Name: _____

Exhibit "A"
Description of Owner's Property

All of that part of Government Lot 2, Section 30, Township 46 South, Range 23 East, Sanibel Island, Lee County, Florida, lying Northerly of the Sanibel Slough and Easterly of Donax Street, as conveyed to the City of Sanibel, Florida by Deeds recorded in Official Records Book 2239, Page 2451, and in Official Records Book 2786, Page 3861, as corrected by Corrective Deed recorded in Official Records Book 3150, Page 1660, LESS AND EXCEPT therefrom those portions thereof as described in Deeds recorded in Official Records Book 2062, Page 1369, and in Official Records Book 2786, Page 3866, as corrected by Corrective Deed recorded in Official Records Book 3212, Page 805, all of the Public Records of Lee County, Florida.

A portion of the above described property is also described as a portion of Tract "B", BEACHVIEW COUNTRY CLUB ESTATES UNIT NO. 2, according to the Plat thereof, as recorded in Plat Book 54, Page 87, of the Public Records of Lee County, Florida, and located on Sheet 8 of 11 of said Plat.

Exhibit "B"
Description of Leased Property and non-exclusive access/utility easement
Page 1 of 2

Leased Property:

A TRACT OR PARCEL OF LAND LYING IN GOVERNMENT LOT 2, SECTION 30, TOWNSHIP 46 SOUTH, RANGE 23 EAST, CITY OF SANIBEL, LEE COUNTY, FLORIDA WHICH TRACT OR PARCEL IS DESCRIBED AS FOLLOWS:

COMMENCING AT THE INTERSECTION OF THE NORTH LINE OF SAID SECTION 30 AND THE CENTERLINE OF DONAX STREET, THENCE RUN N89°00'30"E ALONG SAID NORTH LINE OF SECTION 30 FOR 34.10 FEET TO THE EASTERLY RIGHT-OF-WAY LINE OF DONAX STREET; THENCE S29°22'12"E ALONG SAID RIGHT-OF-WAY LINE, A DISTANCE OF 205.07 FEET; THENCE N86°32'28"E, A DISTANCE OF 130.84 FEET TO THE POINT OF BEGINNING; THENCE N86°32'28"E, A DISTANCE OF 25.00 FEET; THENCE S03°27'32"E, A DISTANCE OF 75.00 FEET; THENCE S86°32'28"W, A DISTANCE OF 25.00 FEET; THENCE N03°27'32"W, A DISTANCE OF 75.00 FEET TO THE POINT OF BEGINNING.

CONTAINING 1,875 SQUARE FEET OR 0.043 ACRE

DESCRIPTIONS - 20' INGRESS/EGRESS & UTILITY EASEMENT

A TRACT OR PARCEL OF LAND LYING IN GOVERNMENT LOT 2, SECTION 30, TOWNSHIP 46 SOUTH, RANGE 23 EAST, CITY OF SANIBEL, LEE COUNTY, FLORIDA WHICH TRACT OR PARCEL IS DESCRIBED AS FOLLOWS:

COMMENCING AT THE INTERSECTION OF THE NORTH LINE OF SAID SECTION 30 AND THE CENTERLINE OF DONAX STREET, THENCE RUN N89°00'30"E ALONG SAID NORTH LINE OF SECTION 30 FOR 34.10 FEET TO THE EASTERLY RIGHT-OF-WAY LINE OF DONAX STREET; THENCE S29°22'12"E ALONG SAID RIGHT-OF-WAY LINE, A DISTANCE OF 68.89 FEET TO THE POINT OF BEGINNING; THENCE S89°06'28"E, A DISTANCE OF 160.78 FEET; THENCE S03°27'32"E, A DISTANCE OF 110.21 FEET; THENCE N86°32'28"E, A DISTANCE OF 30.00 FEET; THENCE S03°27'32"E, A DISTANCE OF 20.00 FEET; THENCE S86°32'28"W, A DISTANCE OF 50.00 FEET; THENCE N03°27'32"W A DISTANCE OF 111.68 FEET; THENCE N89°06'28"W, A DISTANCE OF 130.57 FEET; THENCE N29°22'12"W, A DISTANCE OF 23.16 FEET TO THE POINT OF BEGINNING.

CONTAINING 5932 SQUARE FEET OR 0.136 ACRE

Exhibit "B"
Description of Leased Property and non-exclusive access/utility easement
Page 2 of 2

Depiction of Leased Property and non-exclusive easement within Owner's Property:

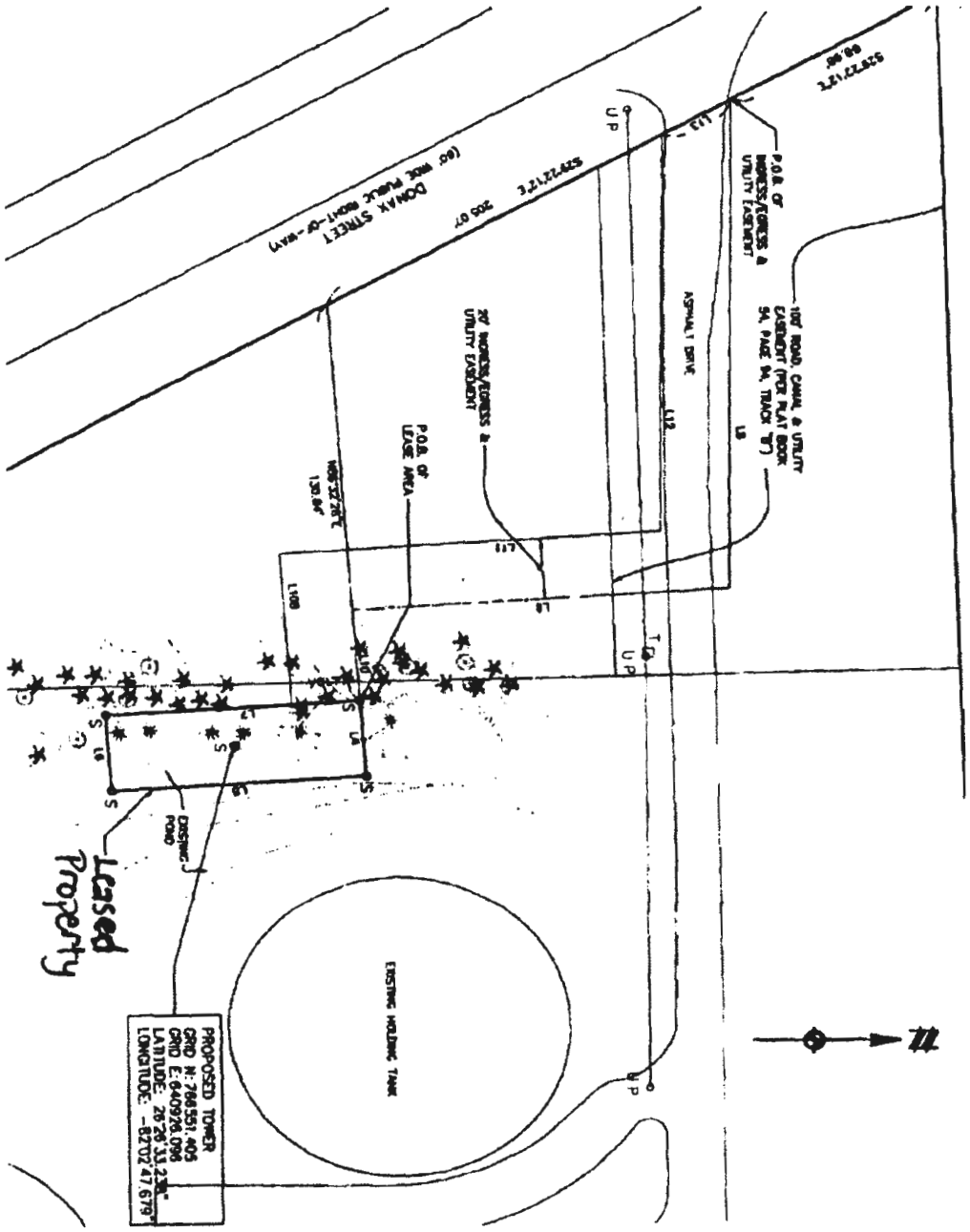

Upon Recording, Return to:

Amy E. Armond, Esq.
c/o Maria Martella, Florida Registered Paralegal
Holland & Knight LLP
515 E. Las Olas Boulevard
Suite 1200
P.O. Box 14070
Fort Lauderdale, Florida 33301

STATE OF FLORIDA)
)
COUNTY OF LEE)

LESSEE's Site I.D.: 68996, Sanibel Donax WWTP

MEMORANDUM OF LEASE AGREEMENT

This Memorandum of Lease Agreement is made this _____ day of _____, 2012, between **CITY OF SANIBEL**, with a mailing address of 800 Dunlop Road, Sanibel, Florida 33597, hereinafter referred to as "LESSOR", and **VERIZON WIRELESS PERSONAL COMMUNICATIONS LP** d/b/a Verizon Wireless, with its principal office located at One Verizon Way, Mail Stop 4AW100, Basking Ridge, New Jersey 07920, hereinafter referred to as "LESSEE". LESSOR and LESSEE are at times collectively referred to hereinafter as the "Parties" or individually as the "Party".

1. LESSOR and LESSEE entered into a Lease Agreement (the "Agreement") on _____, 2012 for an initial term of five (5) years, commencing on the Commencement Date (defined in the Agreement to be the date that is (i) the first day of the month after the date on which LESSEE is granted a building permit by the governmental agency charged with issuing such permits, or (ii) the first day of the month after the date which is 18 months after the Execution Date of the Agreement, whichever occurs first). The Agreement shall automatically be extended for four (4) additional five (5) year terms unless the LESSEE terminates it at the end of the then current five (5) year term by giving the LESSOR written notice of the intent to terminate at least one hundred eighty (180) days prior to the end of the then current five (5) year term.

2. LESSOR owns certain real property and the improvements thereon commonly known as 930 Donax Street, City of Sanibel, County of Lee, State of Florida (the

"Owner's Property") as described on the attached Exhibit "A". LESSOR hereby leases and demises to LESSEE a portion of the Owner's Property comprised of approximately 1,875 (25' x 75') square feet of land in the location shown and described on Exhibit "B" (the "Leased Property"). LESSOR also grants and conveys to LESSEE nonexclusive easements across the Owner's Property connecting the Leased Property with the nearest public right-of-way and public utility easement (as applicable), for (i) unrestricted vehicular and pedestrian access to the Premises and parking on the Property, as needed to install, operate and maintain LESSEE's communications facilities, seven (7) days a week, twenty-four (24) hours a day and (ii) installation, location, operation and maintenance of cable runs and utilities including, without limitation, telephone and electric utilities, all as shown and described on Exhibit "B". In the event any public utility is unable to use the aforementioned easement, LESSOR has agreed to grant an additional easement either to LESSEE or to the public utility at no cost to LESSEE.

3. The terms, covenants and provisions of the Agreement are hereby incorporated by reference into this Memorandum and shall extend to and be binding upon the respective executors, administrators, heirs, successors and assigns of LESSOR and LESSEE.

[Remainder of Page Left Blank, Signature Page to Follow]

IN WITNESS WHEREOF, LESSOR and LESSEE have caused this Memorandum to be duly executed on the date first written hereinabove.

LESSOR:

City of Sanibel

By: _____
Kevin Ruane, Mayor
800 Dunlop Road
Sanibel, Florida 33957

ATTEST: _____
Pamela Smith, City Clerk

APPROVED AS TO FORM:

_____
Kenneth B. Cuyler, City Attorney

Date: _____

LESSEE:

VERIZON WIRELESS PERSONAL COMMUNICATIONS LP
d/b/a VERIZON WIRELESS

BY:_____
Hans F. Leutenegger
Area Vice President Network

Witnesses:

By: _____ By: _____
Name: _____ Name: _____

STATE OF _____)
) **ACKNOWLEDGMENT**
COUNTY OF _____)

I, _____, a Notary Public for said County and State, do hereby certify that Kevin Ruane personally came before me this day and acknowledged that he is the Mayor of the City of Sanibel, and that he, as Mayor, being authorized to do so, executed the foregoing **MEMORANDUM OF LEASE AGREEMENT** on behalf of the City of Sanibel.

WITNESS my hand and official Notarial Seal, this ___ day of _____, 2012.

_____
Notary Public

My Commission Expires:
_____

(Notary Seal)

STATE OF NORTH CAROLINA)
) **ACKNOWLEDGMENT**
COUNTY OF MECKLENBURG)

I, _____, do hereby certify that **Hans F. Leutenegger** personally came before me this day and acknowledged that he is the Area Vice President Network of **VERIZON WIRELESS PERSONAL COMMUNICATIONS LP** d/b/a Verizon Wireless, and that he, as Area Vice President Network, being authorized to do so, executed the foregoing **MEMORANDUM OF LEASE AGREEMENT** on behalf of **VERIZON WIRELESS PERSONAL COMMUNICATIONS LP** d/b/a Verizon Wireless.

WITNESS my hand and official Notarial Seal, this ___ day of _____, 2012.

_____
Notary Public

My Commission Expires:
_____

(Notary Seal)

Exhibit "A"
Description of Owner's Property

All of that part of Government Lot 2, Section 30, Township 46 South, Range 23 East, Sanibel Island, Lee County, Florida, lying Northerly of the Sanibel Slough and Easterly of Donax Street, as conveyed to the City of Sanibel, Florida by Deeds recorded in Official Records Book 2239, Page 2451, and in Official Records Book 2786, Page 3861, as corrected by Corrective Deed recorded in Official Records Book 3150, Page 1660, LESS AND EXCEPT therefrom those portions thereof as described in Deeds recorded in Official Records Book 2062, Page 1369, and in Official Records Book 2786, Page 3866, as corrected by Corrective Deed recorded in Official Records Book 3212, Page 805, all of the Public Records of Lee County, Florida.

A portion of the above described property is also described as a portion of Tract "B", BEACHVIEW COUNTRY CLUB ESTATES UNIT NO. 2, according to the Plat thereof, as recorded in Plat Book 54, Page 87, of the Public Records of Lee County, Florida, and located on Sheet 8 of 11 of said Plat.

Exhibit "B"
Description of Leased Property and non-exclusive access/utility easement

Leased Property:

A TRACT OR PARCEL OF LAND LYING IN GOVERNMENT LOT 2, SECTION 30, TOWNSHIP 46 SOUTH, RANGE 23 EAST, CITY OF SANIBEL, LEE COUNTY, FLORIDA WHICH TRACT OR PARCEL IS DESCRIBED AS FOLLOWS:

COMMENCING AT THE INTERSECTION OF THE NORTH LINE OF SAID SECTION 30 AND THE CENTERLINE OF DONAX STREET, THENCE RUN N89°00'30"E ALONG SAID NORTH LINE OF SECTION 30 FOR 34.10 FEET TO THE EASTERLY RIGHT-OF-WAY LINE OF DONAX STREET; THENCE S29°22'12"E ALONG SAID RIGHT-OF-WAY LINE, A DISTANCE OF 205.07 FEET; THENCE N86°32'28"E, A DISTANCE OF 130.84 FEET TO THE POINT OF BEGINNING; THENCE N86°32'28"E, A DISTANCE OF 25.00 FEET; THENCE S03°27'32"E, A DISTANCE OF 75.00 FEET; THENCE S86°32'28"W, A DISTANCE OF 25.00 FEET; THENCE N03°27'32"W, A DISTANCE OF 75.00 FEET TO THE POINT OF BEGINNING.

CONTAINING 1,875 SQUARE FEET OR 0.043 ACRE

DESCRIPTIONS - 20' INGRESS/EGRESS & UTILITY EASEMENT

A TRACT OR PARCEL OF LAND LYING IN GOVERNMENT LOT 2, SECTION 30, TOWNSHIP 46 SOUTH, RANGE 23 EAST, CITY OF SANIBEL, LEE COUNTY, FLORIDA WHICH TRACT OR PARCEL IS DESCRIBED AS FOLLOWS:

COMMENCING AT THE INTERSECTION OF THE NORTH LINE OF SAID SECTION 30 AND THE CENTERLINE OF DONAX STREET, THENCE RUN N89°00'30"E ALONG SAID NORTH LINE OF SECTION 30 FOR 34.10 FEET TO THE EASTERLY RIGHT-OF-WAY LINE OF DONAX STREET; THENCE S29°22'12"E ALONG SAID RIGHT-OF-WAY LINE, A DISTANCE OF 68.89 FEET TO THE POINT OF BEGINNING; THENCE S89°06'28"E, A DISTANCE OF 160.78 FEET; THENCE S03°27'32"E, A DISTANCE OF 110.21 FEET; THENCE N86°32'28"E, A DISTANCE OF 30.00 FEET; THENCE S03°27'32"E, A DISTANCE OF 20.00 FEET; THENCE S86°32'28"W, A DISTANCE OF 50.00 FEET; THENCE N03°27'32"W A DISTANCE OF 111.68 FEET; THENCE N89°06'28"W, A DISTANCE OF 130.57 FEET; THENCE N29°22'12"W, A DISTANCE OF 23.16 FEET TO THE POINT OF BEGINNING.

CONTAINING 5932 SQUARE FEET OR 0.136 ACRE

Exhibit "B"
Description of Leased Property and non-exclusive access/utility easement
Page 2 of 2

Depiction of Leased Property and non-exclusive easement within Owner's Property:

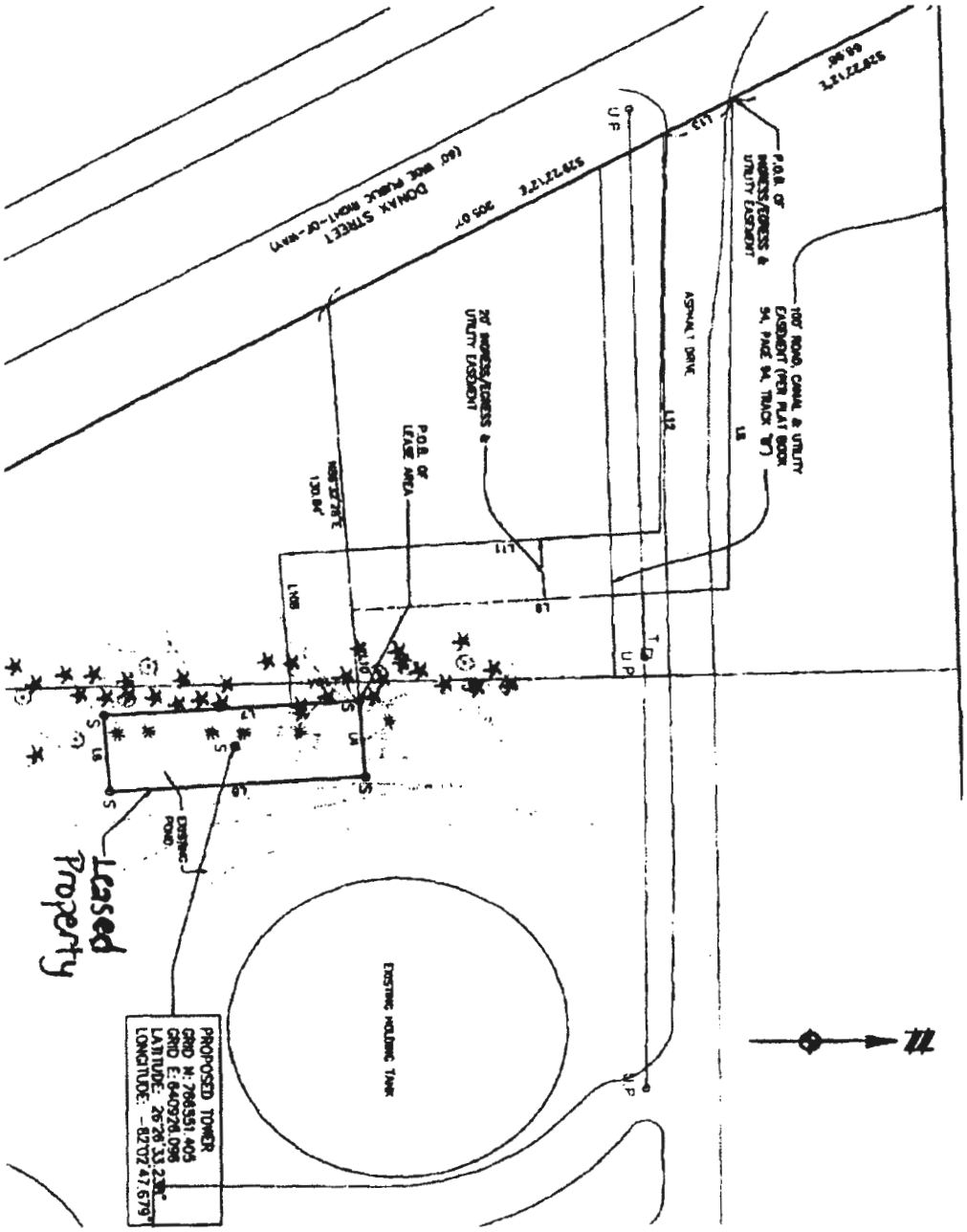

The motion carried.

Status report regarding the Cultural Arts Center

Councilman Harrity reported the following:

- Continuation of dialog
- SCA very cooperative with B.I.G. Arts
- Looking at the recycling area
- Moving slow, but focused
- Ask permission to include the recycle area

Discussion ensued regarding aggressive were the plans for everyone and entities moving fast, but had slowed down because everyone was working together.

Public Comment
Claudia Burns asked if the Town Square/Town Center was the same discussion.

Councilman Harrity explained the possibility of having a town center/town square and was in the Sanibel Plan. He continued to explain that when he discovered SCA had plan, he felt it was an opportunity to work together, thus he began a dialog with shareholders.

Claudia Burns asked if the cultural center was a part or only the center and was the report only cultural arts.

Councilman Harrity answered that he was trying to keep Council and residents appraised of his activities.

Staff recommendation regarding island charity car washes

Mayor Ruane noted staff's recommendation.

Ms. Zimomra noted this was a policy and needed a motion.

Vice Mayor Denham moved, seconded by Councilman Congress to accept the recommendations.

The motion carried.

Matters relating to the Communication Tower approved in Resolution 11-007 to be constructed by Verizon Wireless at the Donax Waste Water Reclamation Facility property

Direction to Verizon Wireless on two issues pursuant to the requirement of Resolution 11-007 (which approved the communication tower at the Donax site):
Whether the flag pulley system is to be constructed on the inside or the outside of the communication tower (Note: The communication tower is to be constructed with a "stealth design" as a flag pole with antennae on the inside of the pole)
Whether down lighting will be required as part of construction in the event the flying of a flag is authorized at a later date

Ms. Zimomra noted this would be on the May City Council agenda.

Newly Proposed Trail Extensions
Proposed path south of Community Park
Proposed path from Pond Apple Park to Bailey Homestead

Ms. Zimomra spoke to Councilmembers walking trails with staff. She noted that since Community Park was developed staff had looked for a connectivity trail through SCCF land. She further explained it would not be a

Staff update regarding an offer to sell to the City property located on the west side of Tarpon Bay Road between Sanibel Captiva Road and the vacant former restaurant building

Ms. Zimomra noted the following:

- Council directed the City Attorney to obtain realtor appraisals he also spoke to Lee County Property Appraiser
- Owner did not have an appraisal
- Staff memorandum

Mr. Cuyler thanked to two realtors for their appraisals.

Discussion ensued regarding vacant land having less value, readied homes more desirable, best use consideration, and read Dr. Loflin' s assessment, took 20 years to purchase all the Sanibel Bayous land back and Council vetted all information

Council advised Mr. McDonald that they would not be going forward with a land purchase.

VERIZON HAS REQUESTED THAT THIS ITEM BE PULLED UNTIL THE JUNE 05, 2012 CITY COUNCIL MEETING (PLEASE SEE ATTACHMENT)

Matters relating to the Communication Tower approved in Resolution 11-007 to be constructed by Verizon Wireless at the Donax Waste Water Reclamation Facility property

Direction to Verizon Wireless on two issues pursuant to the requirement of Resolution 11-007 (which approved the communication tower at the Donax site):

Whether the flag pulley system is to be constructed on the inside or the outside of the communication tower (Note: The communication tower is to be constructed with a "stealth design" as a flag pole with antennae on the inside of the pole)

Whether down lighting will be required as part of construction in the event the flying of a flag is authorized at a later date

As noted by Mayor Ruane under Council Comments.

CITY MANAGER

Informational Items

Blind Pass Update

Ms. Zimomra noted that Lee County Board of Commissioners looking at the contractor proceeding with Blind Pass that worked in Ft. Myers Beach and would be funded through TDC.

Building Department Monthly Revenue Report, March, 2012

Building Department Monthly Permit and Inspections, March, 2012

Planning Department Permit Activity Report, March, 2011

Planning Department Code Enforcement Activity Report, March, 2012

Grease Trap Report, April, 2012

Sanibel Museum & Village, Inc., 2nd Quarter Financial Report

Ms. Zimomra noted that the reports were in the agenda packet. She further advised that the Sanibel Historical Museum and Village contract would be discussed at the June Council meeting.

Begin forwarded message:

From: Jimmy Jordan <Jimmy.Jordan@mysanibel.com>
Date: April 24, 2012 4:17:05 PM EDT
To: "Judie A. Zimomra" <Judie.Zimomra@mysanibel.com>, Ken Cuyler <Ken.Cuyler@mysanibel.com>, Pamela Smith <pbs@mysanibel.com>, Scott Krawczuk <scott.krawczuk@mysanibel.com>, Gates Castle <gates.castle@mysanibel.com>
Subject: FW: 68996 Verizon Wireless - Sanibel Island - Flag Pole Halyard System

FYI
From: Baesch, Mark D [mailto:Mark.Baesch@VerizonWireless.com]
Sent: Tuesday, April 24, 2012 4:02 PM
To: Jimmy Jordan
Cc: Conde, Josephine
Subject: 68996 Verizon Wireless - Sanibel Island - Flag Pole Halyard System

Good afternoon Jimmy,

VZW has contacted several companies that design and sell internal halyard systems on conventional flag poles and have potentially located one that believes they can modify their conventional design to apply it to the communications tower on the Donax property. Currently Flag Desk Inc is working with the Stealth Towers to complete a design that will allow the internal system to function properly without being pinched or bound by the internal antenna coax cables and also not interfere with the radio frequency emissions of the antennas. That said VZW is not ready to present a complete presentation of their findings to the City Commission at the May 1st meeting. They have instructed that the engineers should complete their preliminary design and testing by mid May and will have it available for the June meeting. Please relay this information to the appropriate personal and I will keep you posted on their progress. Thank you.

Mark D. Baesch
SBA Network Services, Inc.

SBA

Consultant to Verizon Wireless
5900 Broken Sound Pkwy NW, Boca Raton, FL 33431
Mobile: 954 557 5815
Email: mbaesch@sbasite.com
www.sbasite.com

Council recessed at 10:25 a.m.

Council convened at 10:42 a.m.

Status report regarding the playground equipment installation at The Sanibel School, 3840 Sanibel Captiva Road

Mayor Ruane gave a brief synopsis of the project.

Discussion ensued regarding total cost, Ms. Zimomra noted playground equipment came in modules, she also spoke to School district appropriation was $60,000, establish a budget and fit in equipment, surprised that property values were decreased by 3%, anticipated the decreases, would not raise taxes and find ways to create revenues, asking for consideration and asking staff for a total cost of the playground equipment, school needs a commitment of support, project may be different if Council did not support, need to go through process for funding, would like to see what the school had planned, school board committed playground could be added on to with additional pieces, would need funding for fencing and cameras, Mayor Ruane to speak with Lee County Board of Commissioners regarding a commitment, need to find out why business were not improving since legislation was adopted, not other municipality more prudent that Sanibel and total cost may be approximately $80,000 for playground.

Mayor Ruane moved, seconded by Councilman Harrity, to direct staff to bring back the total cost for additional playground equipment, as well as all security amenities, including cameras and fencing to secure public safety at the Sanibel School playground at the July 17, 2012 meeting.

Public Comment
None

The motion carried.

Direction to Verizon Wireless on two issues pursuant to the requirement of Resolution 11-007 (which approved the communication tower at the Donax site):

Whether the flag pulley system is to be constructed on the inside or the outside of the communication tower (Note: The communication tower is to be constructed with a "stealth design" as a flag pole with antennae on the inside of the pole)

Whether down lighting will be required as part of construction in the event the flying of a flag is authorized at a later date

Mayor Ruane provided a brief history.

Mark Bash, Verizon spoke regarding vendor for a pulley system for the Donax telecommunications tower as follows:

- Two vendors confirmed the design was possible; 1) Flag Desk, Inc.; 2) Stealth Technology
- Provide required lighting for flying flag in conformance with Sanibel's lighting ordinance
- Design tower with internal antennae
- Internal wince system with access door at the base
- Single line to a lanyard at top of pole
- Portion of pulley system exposed 20 to 25 feet, length of flag
- Recommended flag dimension of 20x30
- Top system would be a ball barring chain system everything internal except when lowering the flag
- Lighting
    - Place light system and flag retaining system to allow flag to move 360 degree around pole plus lightning protection
    - If Council decides to go with a flag final fabrication and tower design would go out
    - Internal system for flag pole feasible with wind requirements
    - Standard flag arrangement
    - Nylon beaded retainer ring – stainless steel for longevity
    - Standard flag arrangement 20x30

- 20x30 portion of pulley system exposed to maintain flag
- Wince system 2x3 foot opening allowing to install the manual crank system at bottom of pole
- Line in individual casings allowing each to operate individually

Discussion ensued regarding preference of an interior mechanism, Verizon provided information from Flag Desk, Inc., which acknowledged they could provide an internal system that would meet the wind-load requirements and provide replacements parts should they be needed, Council asked if an internal system had been built before, Mr. Bash answered no, but common in standard flag poles, internal components the same, but engineered for the tower's specific purpose, would design prevent additional antennas, Mr. Bash answered no, several flag pole telecommunications in Lee County, but none with an internal mechanism, each antennas elevation other Lee County telecommunications tower had same, and timeline of completion was scheduled for early 2013.

Councilman Congress moved, seconded by Vice Mayor Denham, to have an internal system and downed lighting.

Public Comment
None

The motion carried

Status report regarding Community Housing Resources, Inc. (CHR)
CHR Timeline
CHR Contract Matrix - Updated
CHR Contract (existing)
EAR Schedule and Timeline
Councilman Congress spoke to the following:

- Eliminated any items that Council and CHR agreed to on May 01, 2012
- City proposed 3% escalator
- City currently providing administrative expense in the amount of $4,500 annually
- CHR would like to have $4,500 incorporate in quarterly receipts
- Ms. Zimomra explained that CHR would like one sum of $4,500 keeping unspent amount
- Payments made quarterly; currently $268,000 new $275,000 including 3% escalator and $4,500 administrative expense
- 180 days notice to move
- Redefined Sunshine – better transparency by creating a website to post agendas

Discussion ensued regarding disagree off-island units, CHR to have the opportunity for off-island housing, Richard Johnson noted that by contract CHR would want to have the opportunity and the contract would not allow, measurement of progress and Council concern, but could explore and need to see consistent improvement, prefer not to see off-island housing in contract, could always come back to re-work the contract, Richard Johnson noted that there had been very strong Council participation, come back to Council with opportunities, CHR representatives agree to remove section 15, CHR maintains own board, how had transparency improved, Richard Johnson noted the working relationship with liaison was primary connection to City Council, Council liaison very involved, severed former webmaster relationship, welcome public to meetings, serious problems should be brought before City Council, be treated as a partner and bring proposed agreement back to City Council at the July 17, 2012 Council meeting.

Status report regarding the General Employees' Pension Board meeting of Wednesday, May 09, 2012
Investment Reports Quarter Ending – March 31, 2012 Burgess Chambers & Associates, Inc.
Fixed Income Analysis May, 2012 – Burgess Chambers & Associates, Inc.
May 04, 2012 information from Doug Lozen, Foster and Foster actuarial
Reducing the assumption rate
Councilman Congress noted the following:

STEALTH Concealment response letter pertaining to the application and fabrication of an internal halyard system.

Baesch, Mark D

From: Bradley Balkham [BradleyBalkham@stealthsite.com]
Sent: Wednesday, May 23, 2012 12:21 PM
To: Baesch, Mark D
Cc: Ken Wedholm; Bruce Joyner
Subject: RE: Sanibel Island - Internal Halyard Application for Wireless Communications Tower Application

Mark,

We should be able to utilize an internal halyard system although these are typically not used in the wireless industry due to conflict of the halyard with the coax that shares the internal space. In addition, the pole is not hollow for the entire length and instead the top section (referring the concealed portion of the pole) has flange plates, an internal spine, equipment and coax all of which have to be protected from the halyard.

Some design challenges with this concept are the hood or cap that will house the lighting to prevent light pollution, depicted below. This will require modification of the internal truck that houses the pulley and the bearing structure on that truck housing will likely need to be modified to support the additional weight / loading of the hood / lights. The wiring for the lighting presents another challenge as the rotating halyard will obviously twist the wiring if it is not stationary, however, the lighting cannot be held stationary without preventing the flag from rotating.

I do not recommend a stationary flag as it will only wrap itself around the pole. As you can see, either one of these features alone is not a problem however both of them will require some additional thought and likely will result in custom fabrication of the system.

Once you have this ironed out exactly what is required we will provide a quote for design/engineering.

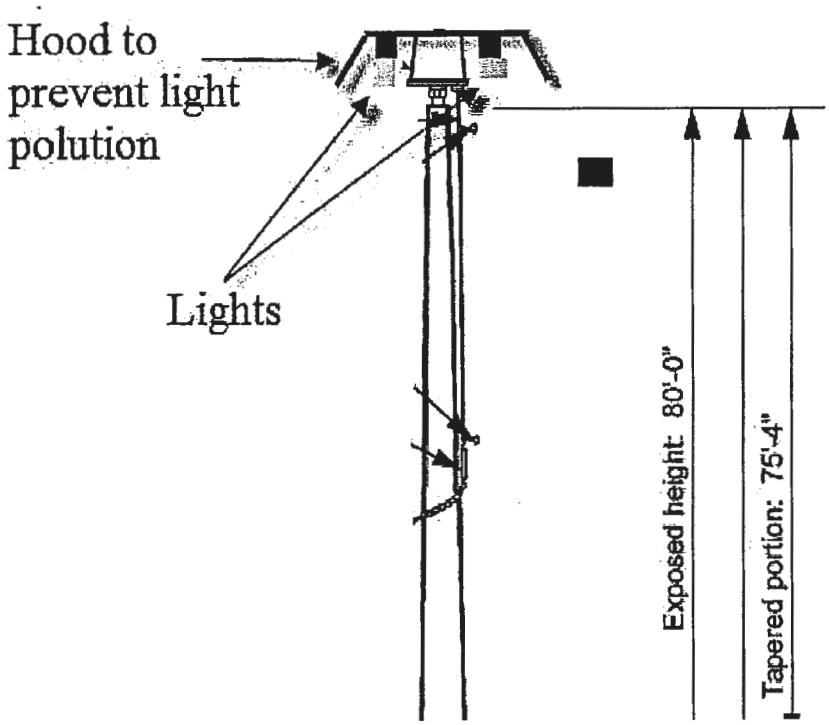

Thanks,

Brad Balkham
Senior Project Manager
STEALTH® Concealment

Sample Internal Halyard System (Provided By Flag Desk Inc.)

The Flag Desk internal system will be modified for use within the Communication Tower.

Model EC80 IH

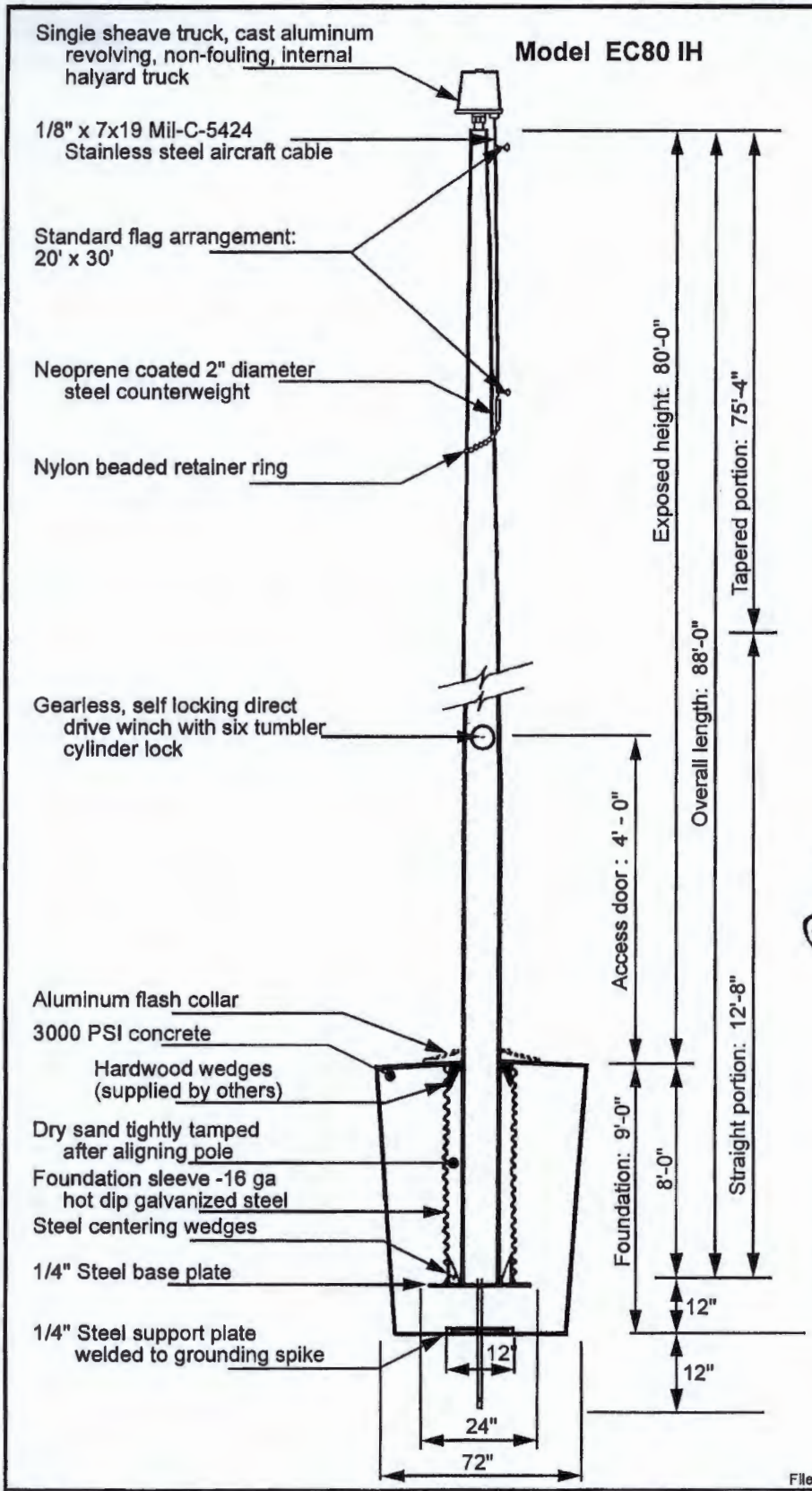

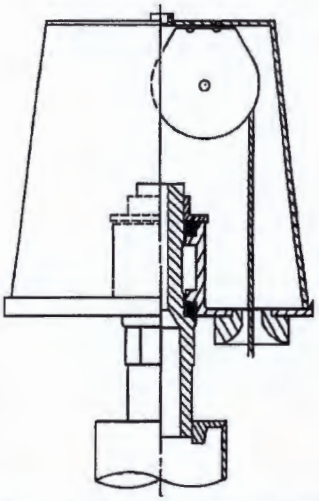

Revolving non-fouling internal halyard truck, cast aluminum body, 26 stainless steel ball bearings, and 2-1/2" diameter plated steel sheave.

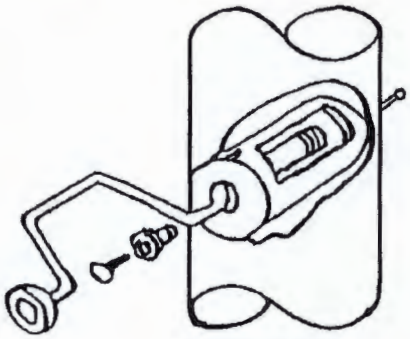

Winch Detail

All shafts with overall length of more than 38'-6" are shipped in two sections.

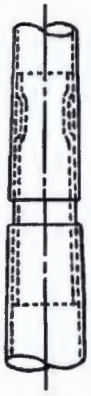

Each section matched marked for field assembly. Exposed portion of jam sleeve must be **well lubricated** prior to assembly.

1-1/2" maximum shop gap allowed for field fitting (ram for tight joint)

Filename: EC80 IH single sheave_revolving truck.pdf

Project:	Ground set tapered aluminum flagpole: ALLOY: 6063T6			Date:
Location:	Exposed height: 80'-0"	Overall height: 88'-0"		Revision:
Architect:	Ship in 3 section	Butt diameter: 12"		
Contractor	Top diameter: 4"	Wall thickness: .375"		
Customer:	Finish: 100 grit polish			Job:

Baesch, Mark D

From: Brent Alexander [brent@flagdesk.com]
Sent: Friday, May 18, 2012 5:03 PM
To: Baesch, Mark D
Subject: Re: FW: Internal Halyard Application for Wireless Communications Tower Application
Attachments: EC80IH.pdf

Mark,

Attached is a shop drawing of one our larger 80' internal halyard aluminum flagpoles. Detailed specifications and included accessories can be found on our website at the link below. Each included accessory is individually viewable so you can see those dimensions/specifications as well. Normally we use our Stainless Steel Winch and Winch Handle when helping others to convert their existing poles into internal halyard flagpoles. The 80' flagpole below, however, uses an M-Winch which has the same overall design but doesn't require a separate access door at the base of the pole. I hope this helps. Let me know if there's anything else we can provide.

EC80IH Deluxe Internal Halyard 80' Satin Aluminum Flagpole
http://www.flagdesk.com/ec80ih-deluxe-internal-halyard-80-satin-aluminum-commercial-flagpole/pole-item/1320497

Specifications for EC80IH
Overall Height - 88'
Exposed Height - 80'
Butt Diameter - 12"
Top Diameter - 4"
Wall Thickness - 0.375"
Number of Sections - 3
Finish - Satin
Material - Aluminum
Maximum Wind Rating Unflagged - 140 mph
Maximum Wind Rating Flagged - 105 mph
Suggested Flag Size - 20 x 30 ft.
Weight - 1020 lbs.

Brent

Brent Alexander
Flag Desk, Inc.
512 Central Ave
Wilmette, IL 60091

Phone 1.847.256.2404 / 1.800.526.8183
Fax 1.847.251.5009 / 1.800.409.0492
www.flagdesk.com

On 5/18/2012 1:51 PM, Baesch, Mark D wrote:
Hi Brent,

Typical Antenna Concealment Design for 5 Carrier – 149' Concealment Communications Tower

50' x 38" Diameter – Five (5) Individual 10' Antenna Sections

STEALTH®
FIRST IN CONCEALMENT

SAFETY.
INTEGRITY.
TRUST.
EXPERIENCE.

6549 FAIN BLVD. N. CHARLESTON, SC 29406
PHONE: (800) 755-0689 / FAX: (843) 207-0207
WWW.STEALTHSITE.COM

VECTOR ENGINEERS
3138 S. State St., Suite 101 (801) 990-1776
Sandy, UT 84070 (801) 990-1778 FAX
Roger T. Alworth, P.E.
Florida License: 57664
Florida Certificate of Authorization: 28828
www.vectorinc.com

DATE: 2/28/2012	DESIGNED: TPH	DRAFTER: BAD

REVISIONS

DATE	DESCRIPTION
2/28/12	REVISED FOR FALL ZONE

VIERA COMPANY

50'-0" TALL X 38" OD TOP SECTION

STEALTH® CONCEALMENT SOLUTIONS
Job:
VZ12-00086W-05R1

LOCATION:
BREVARD COUNTY, FL

DRAWING INDEX

T1 TITLE SHEET
S1 ELEVATION VIEW & NOTES
S2 DETAILS
S3 DETAILS
S4 DETAILS

ROGER T. ALWORTH
LICENSE
No 57664
STATE OF FLORIDA
PROFESSIONAL ENGINEER
FEB 28 2012

STEALTH®
FIRST IN CONCEALMENT

6549 FAIN BLVD
N. CHARLESTON, SC 29406
PHONE: (800) 755-0689
FAX: (843) 207-0207
WWW.STEALTHSITE.COM

PROPRIETARY INFORMATION
THE INFORMATION CONTAINED WITHIN THIS DRAWING SET IS PROPRIETARY AND CONFIDENTIAL BY NATURE. ANY USE OR DISCLOSURE OTHER THAN THAT WHICH RELATES TO STEALTH® CONCEALMENT SOLUTIONS, INC. IS STRICTLY PROHIBITED.

JOB #: VZ12-00086W-05R1

TITLE SHEET
VIERA COMPANY
50'-0" TALL X 38" OD TOP SECTION
BREVARD COUNTY, FL

U0142-529-121

T1 REV. A

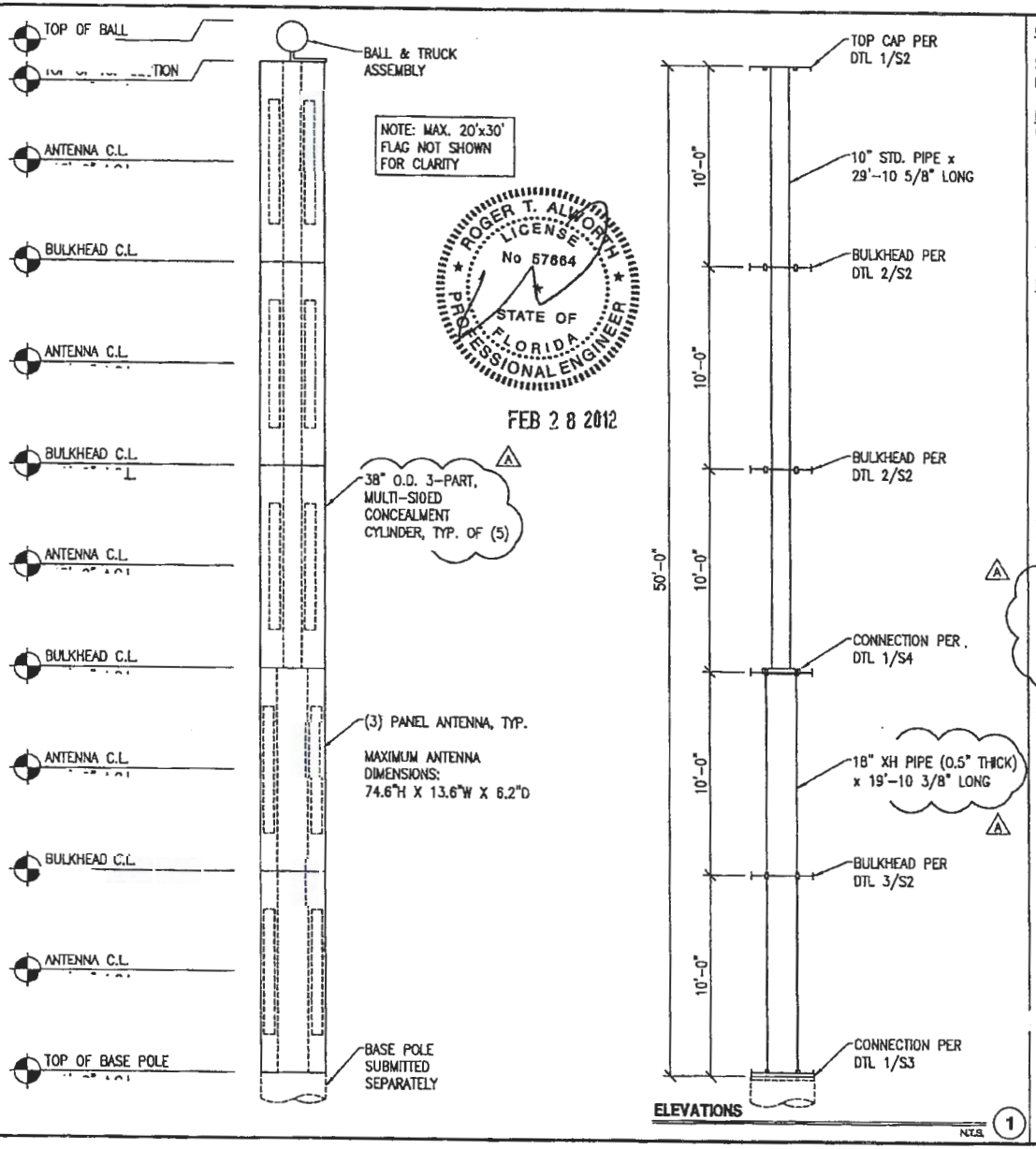

ROGER T. ALWORTH LICENSE No 57664 STATE OF FLORIDA PROFESSIONAL ENGINEER

FEB 28 2012

GENERAL DESIGN NOTES:

STRUCTURAL DESIGN IS BASED ON THE FLORIDA BUILDING CODE, 2010 EDITION (2009 IBC) AND THE TIA-222-G STANDARD

DESIGN LOADS:

WIND: BASIC WIND SPEED: 115 MPH (3-SEC GUST)
EXPOSURE: C
IMPORTANCE: 1.00
STRUCTURE CLASS: II
TOPOGRAPHIC CATEGORY: 1
CREST HEIGHT: 0 FT

ICE: NONE

MATERIAL NOTES:

1. THE MAST PIPE SHALL HAVE A MINIMUM YIELD STRENGTH OF 42 KSI AND CONFORM W/ AISC AND ASTM TESTING STANDARDS.
2. ALL OTHER STEEL SHAPES & PLATES SHALL CONFORM W/ ASTM A36, U.N.O.
3. ALL WELDING SHALL BE PERFORMED BY CERTIFIED WELDERS IN ACCORDANCE w/ THE LATEST VERSION OF THE AMERICAN WELDING SOCIETY AWS D1.1.
4. ALL STEEL SURFACES TO BE THOROUGHLY COATED WITH A RUST INHIBITIVE RED OXIDE PRIMER.

TOP SECTION BASE REACTIONS:

THE SHEAR AND MOMENT REACTIONS LISTED BELOW ARE CONSIDERED TO ACT IN ANY HORIZONTAL DIRECTION.

AXIAL = 7.5 K (1.2 DEAD)
SHEAR = 9.4 K (1.6 WIND)
MOMENT = 261 K-FT (1.6 WIND)

APPROXIMATE WEIGHT OF TOP SECTION (INCLUDING ANTENNA AND COAX) = 6.5 K

COAX NOTE:

ROUTING THE LARGE QUANTITY OF COAX CABLES THROUGH THE CONCEALMENT BULKHEADS IS POSSIBLE (WHEN LAID OUT ON PAPER), BUT WILL BE VERY DIFFICULT IN REAL WORLD FIELD CONDITIONS. WHILE THE CABLES MAY PHYSICALLY FIT THROUGH THE BASE FLANGE ON TOP OF THE MONOPOLE AND THE SUBSEQUENT STEEL BULKHEADS ABOVE, ROUTING THEM PAST THE ANTENNAS IS UNPREDICTABLE, DEPENDING ON THE ANTENNA MOUNTING HARDWARE EMPLOYED, COAX CONNECTOR TYPE(S) USED, COAX ROUTING, AND RELATIVE AZIMUTH DIRECTIONS OF THE ANTENNAS IN THE POLE. STEALTH® CAN NOT GUARANTEE THAT ALL THE COAX CAN BE ROUTED WITHOUT INTERFERENCE TO SOME OR ALL ANTENNAS. IT IS HIGHLY RECOMMENDED THAT THE INSTALLER MOCK UP THE COAX RUNS WITHIN THE CONCEALMENT AND DEVELOP A COAX ROUTING PLAN PRIOR TO INSTALLATION.

VECTOR ENGINEERS
9128 S. Ridge St., Suite 101 (801) 990-0776
Sandy, UT 84070 (801) 990-0779 FAX
Roger T. Alworth, P.E.
Florida License: 57664
Florida Certificate of Authorization: 26828
www.vectorengineers.com

DATE: 2/28/2012	DESIGNED: TPH	DRAFTER: BAD

REVISIONS

DATE	DESCRIPTION
2/24/12	REVISED FOR FALL ZONE

STEALTH®
FIRST IN CONCEALMENT

6549 FAIN BLVD
N. CHARLESTON, SC 29406
PHONE: (803) 723-0689
FAX: (843) 207-0907
WWW.STEALTHSITE.COM

PROPRIETARY INFORMATION
THE INFORMATION CONTAINED WITHIN THIS DRAWING SET IS PROPRIETARY AND CONFIDENTIAL BY NATURE. ANY USE OR DISCLOSURE OTHER THAN THAT WHICH RELATES TO STEALTH® CONCEALMENT SOLUTIONS, INC. IS STRICTLY PROHIBITED.

JOB #: VZ12-00086W-05R1

ELEVATION VIEW & NOTES

VIERA COMPANY
50'-0" TALL X 38" OD TOP SECTION
BREVARD COUNTY, FL

U0142-529-121

S1 REV A

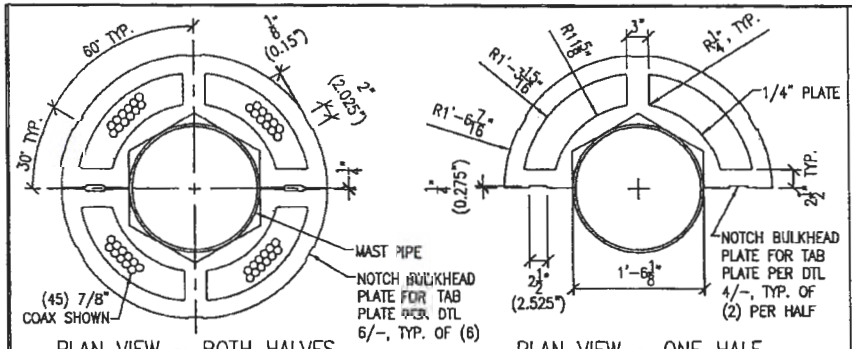

BULKHEAD @ 150'-0" A.G.L.

N.T.S. (3)

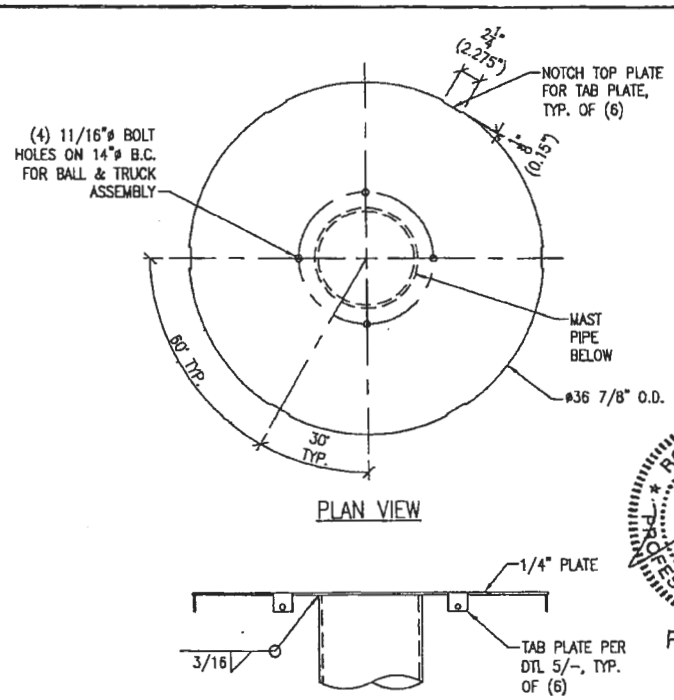

TOP CAP

N.T.S. (1)

ROGER T. ALWORTH LICENSE No 57664 STATE OF FLORIDA PROFESSIONAL ENGINEER

FEB 28 2012

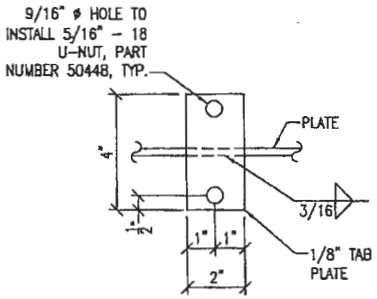

N.T.S. (6)

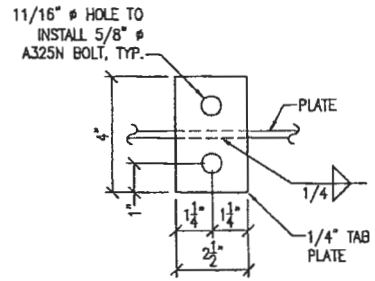

N.T.S. (4)

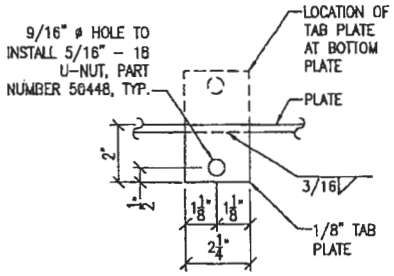

N.T.S. (5)

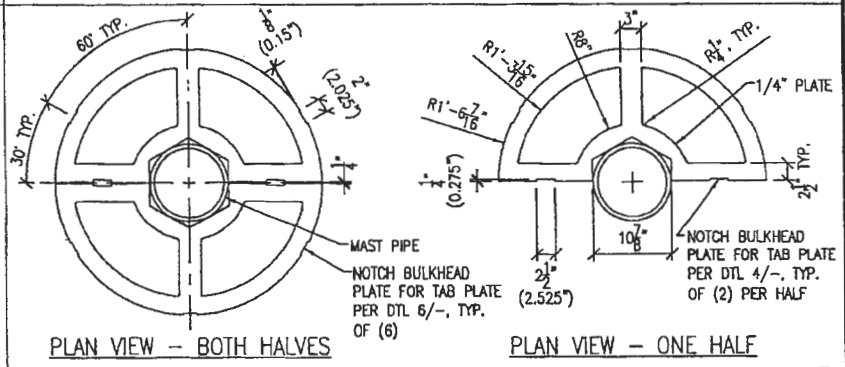

(2)

VECTOR ENGINEERS
9138 S. State St., Suite 101
Sandy, UT 84070
(801) 990-0775
Roger T. Alworth, P.E.
Florida License: 57664
Florida Certificate of Authorization: 26878
www.vectorengineers.com

DATE: 2/28/2012 DESIGNED: TPH DRAFTER: BAD

REVISIONS

DATE	DESCRIPTION
2/28/12	REVISED FOR FALL ZONE

STEALTH®
FIRST IN CONCEALMENT

4349 FAIN BLVD
N. CHARLESTON, SC 29405
PHONE: (800) 755-0569
FAX: (843) 207-0207
WWW.STEALTHSTIL.COM

PROPRIETARY INFORMATION
THE INFORMATION CONTAINED WITHIN THIS DRAWING SET IS PROPRIETARY AND CONFIDENTIAL BY NATURE. ANY USE OR DISCLOSURE OTHER THAN THAT WHICH RELATES TO STEALTH® CONCEALMENT SOLUTIONS, INC. IS STRICTLY PROHIBITED.

JOB #: VZ12-00086W-05R1

DETAILS

VIERA COMPANY

50'-0" TALL X 38" OD TOP SECTION

BREVARD COUNTY, FL

U0142-529-121

S2

REV A

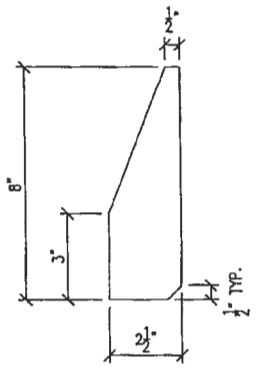

SECTION B–B

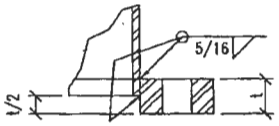

SECTION A–A

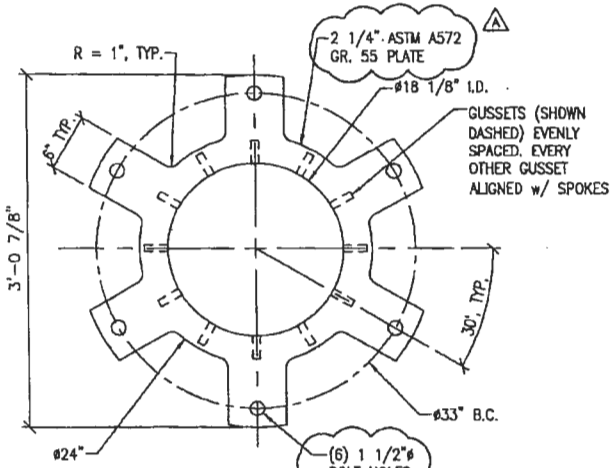

PLATE A

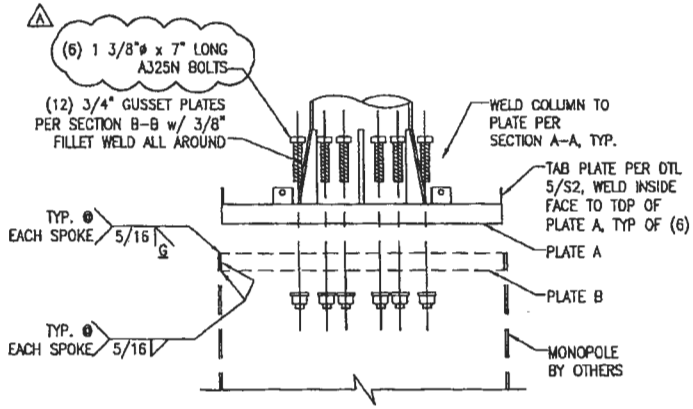

EXPLODED ELEVATION VIEW

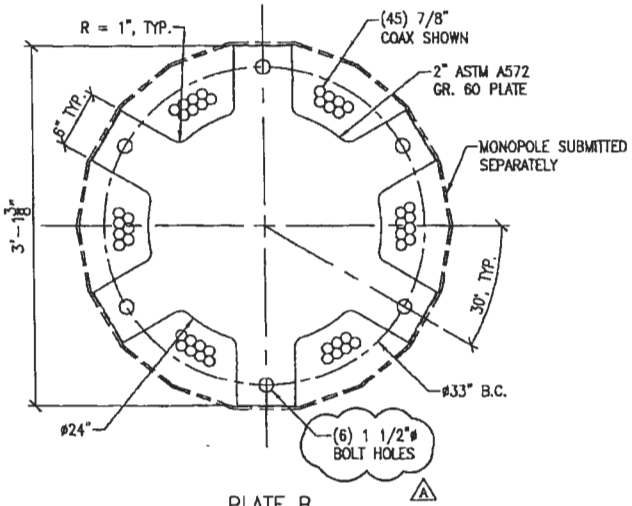

PLATE B

ROGER T. ALWORTH
LICENSE No 57684
STATE OF FLORIDA
PROFESSIONAL ENGINEER

FEB 28 2012

NTS.

1

VECTOR Engineering
9135 N. State St., Suite 101
Sandy, UT 84070
(801) 990-1776
(801) 990-1778 FAX
Roger T. Alworth, P.E.
Florida License: 57684
Florida Certificate of Authorization: 28439
www.vectorengineering.com

DATE: 2/28/2012	DESIGNED: TPH	DRAFTER: BAD

REVISIONS

DATE	DESCRIPTION
2/28/12	REVISED FOR FALL ZONE

STEALTH®
FIRST IN CONCEALMENT
6549 FAIN BLVD
N. CHARLESTON, SC 29406
PHONE: (803) 755-0669
FAX: (847) 207-0187
WWW.STEALTHSITE.COM

PROPRIETARY INFORMATION
THE INFORMATION CONTAINED WITHIN THIS DRAWING SET IS PROPRIETARY AND CONFIDENTIAL BY NATURE. ANY USE OR DISCLOSURE OTHER THAN THAT WHICH RELATES TO STEALTH® CONCEALMENT SOLUTIONS, INC. IS STRICTLY PROHIBITED.

JOB #: VZ12-00086W-05R1

DETAILS

VIERA COMPANY
50'-1" TALL X 38" OD TOP SECTION
BREVARD COUNTY, FL

U0142-529-121

S3

REV A

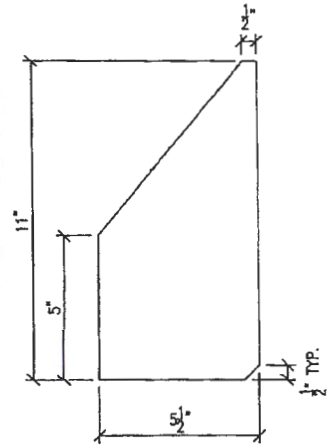

SECTION B–B

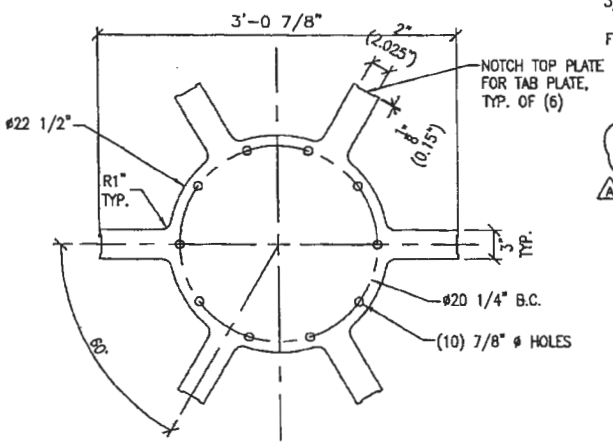

PLATE B

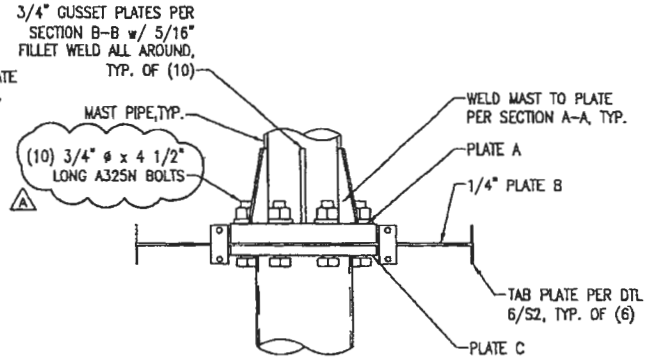

ELEVATION VIEW

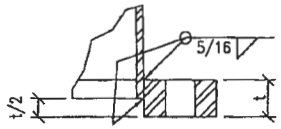

SECTION A–A

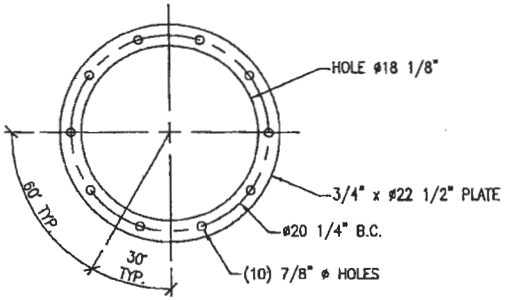

PLATE C

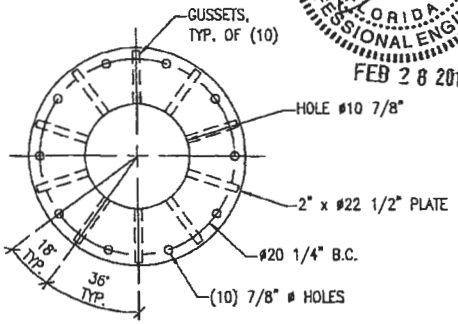

PLATE A

N.T.S.

1

ROGER T. ALWORTH
LICENSE
No 57664
STATE OF FLORIDA
PROFESSIONAL ENGINEER
FEB 28 2012

VECTOR engineers
9135 S. State St., Suite 101 (801) 990-1776
Sandy, UT 84070 (801) 990-1778 FAX
Roger T. Alworth, P.E.
Florida License: 57664
Florida Certificate of Authorization: 28625
www.vectorengineers.com

DATE: 2/23/2012	DESIGNED: TPH	DRAFTER: BAD

REVISIONS

DATE	DESCRIPTION
3/28/12	REVISED FOR FALL ZONE

STEALTH®
FIRST IN CONCEALMENT
6549 FAIN BLVD
N. CHARLESTON, SC 29406
PHONE: (803) 753-0699
FAX: (843) 207-0207
WWW.STEALTHSITE.COM

PROPRIETARY INFORMATION
THE INFORMATION CONTAINED WITHIN THIS DRAWING SET IS PROPRIETARY AND CONFIDENTIAL BY NATURE. ANY USE OR DISCLOSURE OTHER THAN THAT WHICH RELATES TO STEALTH® CONCEALMENT SOLUTIONS, INC. IS STRICTLY PROHIBITED.

JOB #: VZ12-00086W-05R1

DETAILS

VIERA COMPANY
50'-0" TALL X 38" OD TOP SECTION
BREVARD COUNTY, FL

U0142-529-121

S4

REV A

Sample Tower Design Drawings – 149' Concealment Communications Tower

valmont

STRUCTURES

VALMONT MICROFLECT
3575 25TH ST. SE – P.O. BOX 12985
SALEM, OR 97302-1190
PHONE: 1-800-547-2151
ENGINEER: David Casey (x6618)
Reviewed by:

COMMUNICATION POLE DESIGN CALCULATIONS

EXPIRES ON

JUL 2 2 2009

FEB 2 8 2011

VERIZON WIRELESS
VALMONT ORDER #: 12694-09
SITE NAME: REYES TREE FARM / 68716
POLE HEIGHT: 99 / 149 w/CONCEALMENT

valmont

STRUCTURES

7/22/09

ENGINEERING DATA

for

VERIZON WIRELESS
REYES TREE FARM / 68716
VALMONT ORDER 12694-09

1) STRUCTURE DESIGN CONFORMS TO EIA/TIA-222-G INCLUDING:
   130.0 MPH WIND (3 SECOND GUST, 50 YR. RETURN PERIOD) NO ICE
   NO RADIAL ICE CONSIDERED IN THE DESIGN
   NO RADIAL ICE CONSIDERED IN THE DESIGN
   EXPOSURE CATEGORY C
   STRUCTURE CLASSIFICATION III
   TOPOGRAPHIC CATEGORY 1
   60 MPH BASIC WIND SPEED WITH NO ICE FOR TWIST AND SWAY
   SPECTRAL RESPONSE ACCELERATION AT SHORT PERIODS AND 1 SEC.: Ss = 0.09 & S1 = 0.03
2) FEEDLINES ARE ASSUMED TO BE PLACED INTERIOR TO THE POLE.
3) ALL MICROWAVE ASSUMED TO BE 6 GHz UNLESS OTHERWISE NOTED.
4) LOADING AS FOLLOWS:
   99' POLE
   1 - 50' X 30" Concealment @ 99.0'

STRUCTURE ANCHORAGE INFORMATION

POLE HEIGHT(FT):	99	NUMBER OF A.B.'s:	8
BOLT CIRCLE(IN):	50.59	DIA. OF A.B.'s(IN):	2.25
BASE VERTICAL(K):	23.63	LENGTH OF A.B.'s(IN):	84.00
BASE SHEAR(K):	25.50	PROJECTION LENGTH(IN):	11.75
BASE MOMENT(FT-K):	1952	TEMPLATE OD(IN):	54.09

valmont

STRUCTURES

BY_____ DATE _____
CHKD. BY _____ DATE _____

SHEET NO. _____

7/22/09

ENGINEERING DATA

for

VERIZON WIRELESS
REYES TREE FARM / 68716
VALMONT ORDER 12694-09

EIA/TIA-222-G

BASIC WIND:	130.0 MPH	DESIGN ICE THICKNESS:	
WIND & ICE:	NOT REQUIRED	EXPOSURE CATEGORY:	C
TWIST & SWAY:	60.0 MPH	STRUCTURE CLASS.:	III
S_S:	0.09	TOPOGRAPHIC CATEGORY:	1
S_1:	0.03		

QTY	DESCRIPTION	HEIGHT	DATA W.O. ICE EPA	DATA W.O. ICE WT	DATA W/ ICE EPA	DATA W/ ICE WT
1	50' X 30" Concealment	@ 99.0 '	75.00	6470	75.00	6470

BY VALMONT INDUSTRIES FOR: VERIZON WIRELESS 99' POLE, SITE: REYES TREE FARM / 68716

DATE 07/22/09
Fuse 1.7.0.334

*** SUMMARY ***

Design Code: TIA-222-G

DESIGN SUMMARY

Height Above Base Plate (ft)	99.00	Ground Line Diameter (in)	43.420	Pole Shaft Weight (lbs)	11147
		Top Diameter (in)	29.998		
		Pole Taper (in/ft)	0.1400	Shape:	18 Sides

Connections Between Sections /First/

Height Above Ground (ft)	53.50
Type	Slip Joint
Overlap Length (in)	69

Section Characteristics

	/First/	/Second/
Base Diameter (in)	43.420	37.173
Top Diameter (in)	35.930	29.998
Thickness (in)	0.31250	0.21875
Length (ft)	53.500	51.250
Weight (lbs)	7107	4040

ANALYSIS SUMMARY

	Pt. of Fixity	Governing Level Sec.1	Governing Level Sec.2	Pole Top
Governing Load Case	WIND	WIND	WIND	WIND
Height (ft)	0.00	0.00	53.50	99.00
Resultant Moment (in-kips)	23420	23420	9680	2658
Shear Force (lbs)	25545	25545	16889	8853
Axial Force (lbs)	21832	21832	11771	7098
Effective Yield Strength (ksi)	65.00	65.00	62.10	65.00
Combined Interaction Value	0.89	0.89	0.78	0.31
Total Deflection (in)	0.00	0.00	15.37	50.37

Note: Diameters are outside, measured across the flats
Forces and moments are reported in the local element coordinate system

BY VALMONT INDUSTRIES FOR: VERIZON WIRELESS 99' POLE, SITE: REYES TREE FARM / 68716

DATE 07/22/09
Fuse 1.7.0.334

*** POLE SHAFT POINT OF FIXITY REACTIONS ***

Loading Case Identifier	Moments About X-Axis (in-kips)	Moments About Y-Axis (in-kips)	Moments Resultant (X & Y) (in-kips)	Moments Torsional (in-kips)	Vertical Force (lbs)	Shear In X-Direction (lbs)	Shear In Y-Direction (lbs)	Shear Resultant (X & Y) (lbs)	Notes
WIND	17941	-15054	23420	0	21881	16393	19537	25503	
T&S	1852	-1554	2417	0	17625	1701	2027	2646	

Note: Positive vertical force is downward.
Reactions are considered in the global coordinate system.

BY VALMONT INDUSTRIES FOR: VERIZON WIRELESS 99' POLE, SITE: REYES TREE FARM / 68716

DATE 07/22/09
Fuse 1.7.0.334

*** INPUT LOADS ***

Design Code TIA-222-G
Loading Case WIND

Basic Wind Velocity is 130.00 mph Ice Thickness 0.00
Wind Orientation is 50.0 Degrees Clockwise From -X- Axis
Structure Weight Overload Factor is 1.200
Exposure C, Gust Factor 1.10
Structure Category 3, Topographic Category 1, Crest Height 0.00 ft
Orientations are Measured Clockwise From -X- Axis
Positive -Y- Axis is 90 Degrees Clockwise From -X- Axis
Foundataion Rotation of 0.00 Degrees
Elevation of structure base above surrounding terrain = 1.00 ft

Orientation of System

```
          +******* +X-Axis
        * *        (Transverse)
       *  *
      *   *
(Longitudinal) *    * (Vertical)
    +Y-Axis  *      * +Z-Axis
```

Load Point Number	Mounting Height (ft)	Load Height (ft)	Load Eccentricity (ft)	Orientation in XY Plane (Degrees)	Force-X (lbs)	Force-Y (lbs)	Force-Z (lbs)	EPA (ft^2)
1	99.00	124.00	0.00	50.00	5319	6339	7764	75.00

BY VALMONT INDUSTRIES FOR: VERIZON WIRELESS 99' POLE, SITE: REYES TREE FARM / 68716

DATE 07/22/09
Fuse 1.7.0.334

*** INPUT LOADS ***

Design Code TIA-222-G
Loading Case T&S

Basic Wind Velocity is 60.00 mph Ice Thickness 0.00
Wind Orientation is 50.0 Degrees Clockwise From -X- Axis
Structure Weight Overload Factor is 1.000
Exposure C, Gust Factor 1.10
Structure Category 3, Topographic Category 1, Crest Height 0.00 ft
Orientations are Measured Clockwise From -X- Axis
Positive -Y- Axis is 90 Degrees Clockwise From -X- Axis
Foundataion Rotation of 0.00 Degrees
Elevation of structure base above surrounding terrain = 1.00 ft

Orientation of System

```
          +******** +X-Axis
        * *        (Transverse)
       *  *
      *   *
(Longitudinal) *    * (Vertical)
     +Y-Axis  *     * +Z-Axis
```

Load Point Number	Mounting Height (ft)	Load Height (ft)	Load Eccentricity (ft)	Orientation in XY Plane (Degrees)	Force-X (lbs)	Force-Y (lbs)	Force-Z (lbs)	EPA (ft^2)
1	99.00	124.00	0.00	50.00	551	657	6470	75.00

BY VALMONT INDUSTRIES FOR: VERIZON WIRELESS 99' POLE, SITE: REYES TREE FARM / 68716

DATE 07/22/09
Fuse 1.7.0.334

*** Properties ***

Connection Locations	Distance From Base (ft)	Diameter Across Flats (in)	Wall Thickness (in)	D/t Across Flats	w/t Across Flats	Moments of Inertia (in^4)	Area (in^2)
Top of Sect 2	99.00	29.998	0.2188	137.13	22.42	2316	20.68
	94.00	30.698	0.2188	140.33	22.98	2483	21.16
	89.00	31.398	0.2188	143.53	23.55	2658	21.65
	84.00	32.098	0.2188	146.73	24.11	2841	22.13
	79.00	32.798	0.2188	149.93	24.67	3032	22.62
	74.00	33.498	0.2188	153.13	25.24	3232	23.11
	69.00	34.198	0.2188	156.33	25.80	3440	23.59
	64.00	34.898	0.2188	159.53	26.37	3657	24.08
	59.00	35.598	0.2188	162.73	26.93	3883	24.56
	54.00	36.298	0.2188	165.93	27.49	4118	25.05
	53.50	36.368	0.2188	166.25	27.55	4142	25.10
Top of Sect 1	53.50	35.930	0.3125	114.98	18.51	5660	35.33
	49.00	36.560	0.3125	116.99	18.87	5966	35.95
Base of Sect 2	47.75	36.735	0.3125	117.55	18.96	6053	36.13
	44.00	37.260	0.3125	119.23	19.26	6318	36.65
	39.00	37.960	0.3125	121.47	19.66	6684	37.34
	34.00	38.660	0.3125	123.71	20.05	7064	38.03
	29.00	39.360	0.3125	125.95	20.45	7458	38.73
	24.00	40.060	0.3125	128.19	20.84	7866	39.42
	19.00	40.760	0.3125	130.43	21.24	8289	40.12
	14.00	41.460	0.3125	132.67	21.63	8727	40.81
	9.00	42.160	0.3125	134.91	22.03	9180	41.51
	4.00	42.860	0.3125	137.15	22.42	9648	42.20
Pt of Fixity	0.00	43.420	0.3125	138.94	22.74	10034	42.76

BY VALMONT INDUSTRIES FOR: VERIZON WIRELESS 99' POLE, SITE: REYES TREE FARM / 68716

DATE 07/22/09
Fuse 1.7.0.334

Forces and Moments for Pole in the Local Element Coordinate System

Loading Case WIND

Dist. From Base (ft)	Mx (in-kips)	My (in-kips)	Resultant Mx & My (in-kips)	Torsion (in-kips)	Shear X-Dir. (lbs)	Shear Y-Dir. (lbs)	Resultant Shear (lbs)	Axial (lbs)
99.00	2037	-1709	2658	0	5690	6782	8853	7098
94.00	2464	-2067	3216	0	6246	7443	9717	7550
89.00	2931	-2459	3826	0	6806	8111	10588	8018
84.00	3438	-2885	4488	0	7370	8783	11465	8501
79.00	3986	-3345	5204	0	7937	9458	12347	9000
74.00	4575	-3839	5972	0	8506	10136	13232	9517
69.00	5205	-4367	6794	0	9075	10816	14119	10050
64.00	5875	-4930	7669	0	9645	11495	15005	10601
59.00	6586	-5526	8597	0	10214	12172	15890	11170
54.00	7338	-6157	9579	0	10796	12866	16795	11720
53.50	7415	-6222	9680	0	10856	12937	16889	11771
53.50	7415	-6222	9680	0	10842	12921	16867	11802
49.00	8131	-6823	10614	0	11383	13566	17709	12958
47.75	8336	-6995	10882	0	11522	13731	17925	13306
44.00	8966	-7523	11704	0	11939	14229	18575	13926
39.00	9841	-8257	12846	0	12495	14891	19439	14758
34.00	10755	-9025	14040	0	13041	15541	20288	15610
29.00	11708	-9824	15284	0	13575	16177	21118	16483
24.00	12699	-10656	16578	0	14093	16795	21925	17377
19.00	13727	-11518	17919	0	14592	17390	22701	18290
14.00	14789	-12409	19306	0	15066	17954	23438	19224
9.00	15885	-13329	20736	0	15526	18503	24154	20177
4.00	17014	-14276	22210	0	15994	19061	24883	21138
0.00	17941	-15054	23420	0	16420	19569	25545	21832

BY VALMONT INDUSTRIES FOR: VERIZON WIRELESS 99' POLE, SITE: REYES TREE FARM / 68716

DATE 07/22/09
Fuse 1.7.0.334

Deflections and Stresses for Pole

Loading Case WIND

*** Deflections and Stresses ***

Distance From Base (ft)	Defl. X-Dir (in)	Defl. Y-Dir (in)	Defl. Resultant X & Y (in)	Defl. Z-Dir (in)	Rotation (deg.)	Axial Interaction Term	Flexural Interaction Term	Shear Interaction Term	Torsion Interaction Term	Combined Stress Interaction	Effective Yield Strength (ksi)
99.00	32.4	38.6	50.4	1.4	4.52	0.01	0.30	0.03	0.00	0.31	65.00
94.00	29.4	35.0	45.7	1.2	4.38	0.01	0.35	0.03	0.00	0.35	65.00
89.00	26.5	31.6	41.2	1.1	4.22	0.01	0.39	0.03	0.00	0.40	65.00
84.00	23.7	28.3	36.9	0.9	4.04	0.01	0.44	0.04	0.00	0.45	65.00
79.00	21.1	25.1	32.8	0.8	3.84	0.01	0.49	0.04	0.00	0.50	65.00
74.00	18.5	22.1	28.9	0.6	3.63	0.01	0.54	0.04	0.00	0.55	64.54
69.00	16.2	19.3	25.2	0.5	3.40	0.01	0.60	0.04	0.00	0.61	63.95
64.00	14.0	16.6	21.7	0.4	3.16	0.01	0.65	0.04	0.00	0.66	63.35
59.00	11.9	14.2	18.5	0.3	2.91	0.01	0.71	0.04	0.00	0.72	62.75
54.00	10.1	12.0	15.6	0.3	2.64	0.01	0.77	0.05	0.00	0.78	62.16
53.50	9.9	11.8	15.4	0.2	2.61	0.01	0.77	0.05	0.00	0.78	62.10
53.50	9.9	11.8	15.4	0.2	2.61	0.01	0.53	0.03	0.00	0.54	65.00
49.00	8.4	10.0	13.0	0.2	2.42	0.01	0.56	0.03	0.00	0.57	65.00
47.75	8.0	9.5	12.4	0.2	2.37	0.01	0.57	0.03	0.00	0.58	65.00
44.00	6.8	8.1	10.6	0.1	2.21	0.01	0.60	0.03	0.00	0.61	65.00
39.00	5.4	6.4	8.4	0.1	1.98	0.01	0.63	0.04	0.00	0.64	65.00
34.00	4.1	4.9	6.4	0.1	1.75	0.01	0.67	0.04	0.00	0.68	65.00
29.00	3.0	3.6	4.7	0.0	1.51	0.01	0.70	0.04	0.00	0.71	65.00
24.00	2.1	2.5	3.2	0.0	1.27	0.01	0.73	0.04	0.00	0.74	65.00
19.00	1.3	1.6	2.0	0.0	1.01	0.01	0.76	0.04	0.00	0.77	65.00
14.00	0.7	0.9	1.1	0.0	0.76	0.01	0.80	0.04	0.00	0.81	65.00
9.00	0.3	0.4	0.5	0.0	0.49	0.01	0.83	0.04	0.00	0.84	65.00
4.00	0.1	0.1	0.1	0.0	0.22	0.01	0.86	0.04	0.00	0.87	65.00
0.00	0.0	0.0	0.0	0.0	0.00	0.01	0.88	0.04	0.00	0.89	65.00

BY VALMONT INDUSTRIES FOR: VERIZON WIRELESS 99' POLE, SITE: REYES TREE FARM / 68716

DATE 07/22/09
Fuse 1.7.0.334

Forces and Moments for Pole in the Local Element Coordinate System

Loading Case T&S

Dist. From Base (ft)	Mx (in-kips)	My (in-kips)	Resultant Mx & My (in-kips)	Torsion (in-kips)	Shear X-Dir. (lbs)	Shear Y-Dir. (lbs)	Resultant Shear (lbs)	Axial (lbs)
99.00	209	-175	273	0	584	696	909	6463
94.00	253	-212	330	0	642	765	998	6819
89.00	301	-253	393	0	700	834	1089	7184
84.00	353	-296	461	0	758	903	1179	7556
79.00	410	-344	535	0	817	974	1271	7938
74.00	470	-394	614	0	876	1044	1363	8327
69.00	535	-449	698	0	935	1114	1455	8725
64.00	604	-507	789	0	994	1185	1547	9131
59.00	677	-568	884	0	1054	1256	1639	9546
54.00	755	-633	985	0	1114	1327	1733	9968
53.50	763	-640	996	0	1120	1335	1743	10011
53.50	763	-640	996	0	1119	1333	1741	10011
49.00	837	-702	1092	0	1175	1400	1828	10945
47.75	858	-720	1120	0	1189	1417	1850	11207
44.00	923	-774	1205	0	1233	1469	1918	11672
39.00	1013	-850	1323	0	1291	1538	2008	12303
34.00	1108	-929	1446	0	1348	1606	2097	12945
29.00	1206	-1012	1575	0	1404	1673	2184	13599
24.00	1309	-1098	1708	0	1458	1738	2268	14265
19.00	1415	-1187	1847	0	1511	1800	2350	14942
14.00	1525	-1280	1991	0	1561	1860	2428	15632
9.00	1638	-1375	2139	0	1609	1918	2504	16333
4.00	1755	-1473	2292	0	1659	1977	2581	17047
0.00	1852	-1554	2417	0	1703	2030	2650	17625

BY VALMONT INDUSTRIES FOR: VERIZON WIRELESS 99' POLE, SITE: REYES TREE FARM / 68716

DATE 07/22/09
Fuse 1.7.0.334

Deflections and Stresses for Pole

Loading Case T&S

*** Deflections and Stresses ***

Distance From Base (ft)	Defl. X-Dir (in)	Defl. Y-Dir (in)	Defl. Resultant X & Y (in)	Defl. Z-Dir (in)	Rotation (deg.)	Axial Interaction Term	Flexural Interaction Term	Shear Interaction Term	Torsion Interaction Term	Combined Stress Interaction	Effective Yield Strength (ksi)
99.00	3.3	4.0	5.2	0.0	0.47	0.01	0.03	0.00	0.00	0.04	65.00
94.00	3.0	3.6	4.7	0.0	0.45	0.01	0.04	0.00	0.00	0.04	65.00
89.00	2.7	3.3	4.2	0.0	0.43	0.01	0.04	0.00	0.00	0.05	65.00
84.00	2.4	2.9	3.8	0.0	0.42	0.01	0.05	0.00	0.00	0.05	65.00
79.00	2.2	2.6	3.4	0.0	0.40	0.01	0.05	0.00	0.00	0.06	65.00
74.00	1.9	2.3	3.0	0.0	0.37	0.01	0.06	0.00	0.00	0.06	64.54
69.00	1.7	2.0	2.6	0.0	0.35	0.01	0.06	0.00	0.00	0.07	63.95
64.00	1.4	1.7	2.2	0.0	0.33	0.01	0.07	0.00	0.00	0.07	63.35
59.00	1.2	1.5	1.9	0.0	0.30	0.01	0.07	0.00	0.00	0.08	62.75
54.00	1.0	1.2	1.6	0.0	0.27	0.01	0.08	0.00	0.00	0.09	62.16
53.50	1.0	1.2	1.6	0.0	0.27	0.01	0.08	0.00	0.00	0.09	62.10
53.50	1.0	1.2	1.6	0.0	0.27	0.01	0.05	0.00	0.00	0.06	65.00
49.00	0.9	1.0	1.3	0.0	0.25	0.01	0.06	0.00	0.00	0.06	65.00
47.75	0.8	1.0	1.3	0.0	0.24	0.01	0.06	0.00	0.00	0.06	65.00
44.00	0.7	0.8	1.1	0.0	0.23	0.01	0.06	0.00	0.00	0.07	65.00
39.00	0.6	0.7	0.9	0.0	0.20	0.01	0.07	0.00	0.00	0.07	65.00
34.00	0.4	0.5	0.7	0.0	0.18	0.01	0.07	0.00	0.00	0.07	65.00
29.00	0.3	0.4	0.5	0.0	0.16	0.01	0.07	0.00	0.00	0.08	65.00
24.00	0.2	0.3	0.3	0.0	0.13	0.01	0.08	0.00	0.00	0.08	65.00
19.00	0.1	0.2	0.2	0.0	0.10	0.01	0.08	0.00	0.00	0.09	65.00
14.00	0.1	0.1	0.1	0.0	0.08	0.01	0.08	0.00	0.00	0.09	65.00
9.00	0.0	0.0	0.0	0.0	0.05	0.01	0.09	0.00	0.00	0.09	65.00
4.00	0.0	0.0	0.0	0.0	0.02	0.01	0.09	0.00	0.00	0.10	65.00
0.00	0.0	0.0	0.0	0.0	0.00	0.01	0.09	0.00	0.00	0.10	65.00

MINIMUM DEFLECTION RATIO // DEFLECTION LIMIT / DEFLECTION // IS

BY VALMONT INDUSTRIES FOR: VERIZON WIRELESS 99' POLE, SITE: REYES TREE FARM / 68716 DATE 07/22/09
Fuse 1.7.0.334

*** ANCHOR BOLT CHARACTERISTICS GOVERNED BY LOADING CASE WIND ***

NUMBER OF BOLTS	DIAMETER (IN.)	LENGTH (IN.)	WEIGHT (LB.)	SHIPPED AS	PROJECTION LENGTH (IN.)	GALVANIZED LENGTH (IN.)	THREAD SIZE
8	2.250	84	1247	BOLTS, TEMPLATES	11.75	18.00	4.5-UNC-2A

STEEL SPECIF.	MAXIMUM BOLT FORCE (LB.)	MAXIMUM BOLT SHEAR FORCE (LB.)	FACTORED NOMINAL TENS. STRENGTH (LB.)	STRESS AREA (SQ. IN.)	INTERACTION VALUE	CONFIGURATION OF BOTTOM END
A615	234212	3188	260004	3.250	0.93	THREADED WITH HEAVY HEX HEAD NUT

NOTE: BOLT INTERACTION VALUE WAS CALCULATED BY DIVIDING SHEAR FORCE BY FACTOR RELATED TO DETAIL TYPE d) IN EIA-G SPECS.

*** BOLT COORDINATES AND FORCES ***

BOLT NO.	X-COORD	Y-COORD	MAX TENSION-LB	MAX FORCE-LB	*	BOLT NO.	X-COORD	Y-COORD	MAX TENSION-LB	MAX FORCE-LB
1	25.295	0.00	- 2735	2735	*	2	17.886	17.886	160945	166415
3	0.00	25.295	228741	234212	*					

MAX. BOLT CIRCLE = 50.59 IN. TEMPLATE DIAMETER = 56.59 IN.

*** BASE PLATE CHARACTERISTICS GOVERNED BY LOADING CASE WIND ***

DRAWING NUMBER	OVERALL LENGTH (IN.)	OVERALL WIDTH (IN.)	THICKNESS (IN.)	ACTUAL WEIGHT (LB.)	RAW MATERIAL WEIGHT (LB.)	SIDE LENGTH (IN.)
SD18-98	56.59	57.46	2.7500	1750	2533	9.98

TOP WIDTH (IN.)	POLE DIAM. (MAJOR DIAM.) (IN.)	CRITICAL FAILURE MODE	TOTAL LENGTH OF FAIL MODE LINE (IN.)	EFFECTIVE LENGTH (IN.)	TOTAL MOMENT ALONG FAIL LINE (IN.-LB.)
9.98	43.42	2	66.95	48.19	1948055

STEEL SPECIF. VALMONT	STEEL SPECIF. OTHER	BENDING STRESS (PSI)	EFFECTIVE YIELD STRESS (PSI)	MAX. VERTICAL SHEAR STRESS (PSI)
S56	A572	32071	50000	4851

** LOADS AT POLE BASE IN THE GLOBAL COORDINATE SYSTEM ********** LOADING CASES **********

LOADING CASE IDENTIFICATION	WIND	T&S	]MAX CRITERION-	LOAD CASE
MOMENT ABT. X-AXIS (IN-KIP)	17941	1852	]MOMENT ABT. X	WIND
MOMENT ABT. Y-AXIS (IN-KIP)	- 15054	- 1554	]MOMENT ABT. Y	WIND
SHEAR FORCE (LB.)	25503	2646	]RES. MOMENT	WIND
VERTICAL FORCE (LB.)	21881	17625	]SHEAR FORCE	WIND
			]BOLT FORCE	WIND
			]BOLT TENSION	WIND

l. **RESOLUTION 13-011 AMENDING THE CLASSIFICATION PLAN FOR UNION AND NON-UNION EMPLOYEES OF THE CITY OF SANIBEL FOR FISCAL YEAR 2012-2013, ADOPTING A NEW PLANNING DEPARTMENT JOB CLASSIFICATION; AND PROVIDING AN EFFECTIVE DATE**

n. **RESOLUTION 13-012 APPROVING BUDGET AMENDMENT/TRANSFER NO. 2013-013 AND PROVIDING AN EFFECTIVE DATE** (To transfer $14,851 from the reserve for contingencies to repair/replace a 32 foot support beam at the primary public entrance to City Hall. This amendment does not increase or decrease the FY13 budget)

Mayor Ruane moved, seconded by Vice Mayor Denham to adopt and approve the above items.

Public Comment
None

The motion carried.

e. Approval of two contracts relating to the City of Sanibel's 911 call processing, emergency service dispatch and record keeping functions through coordination with the Lee County Sheriff's Office (LCSO) computerized systems consisting of computer aided dispatch (CAD), mobile CAD and records management system:
Approval of a contract between City of Sanibel and Spillman Technologies, Inc. for computer software and professional services in the amount of $124,259 to provide necessary interface and implementation; approving Spillman Technologies as a sole source provider and authorizing the City Manager to execute said Agreement
Approval of an Interlocal Agreement with the Lee County Sheriff's Office (LCSO) for the sharing of infrastructure and resources to implement and operate a new integrated computer aided dispatch (CAD), mobile CAD and law enforcement records management system in the amount of $46,320 ($20,000 agency add on; $21,320 (1.75% x $1,218,267 total hardware cost) and $5,000 first year payment of annual host agency maintenance fee); authorizing City Manager to execute said Agreement

i. First Amendment to the Verizon lease agreement for site 68996 – Sanibel Donax Wastewater Treatment Plant (WWTP), 930 Donax Road to extend until June 30, 2013 timeframe for Verizon to file a completed building permit application, and authorize the Mayor to execute same

m. Reject bid submitted by Winfield Contracting, Inc. and award Exterior Painting of City Hall Complex to Spectrum Contracting, Inc. in the amount of $52,316.00

o. Approve Woodroffe Corporation Architects to perform design and construction administration services in conjunction with a Lighthouse Beach restroom for a not-to-exceed fee of $47,280 and authorize the City Manager to execute a contract to be prepared by the City Attorney providing for the project to be completed in accordance with the agreement between the City and Woodroffee Corporation Architects dated October, 2010

Business to Business

verizon wireless

Verizon Wireless
777 Nw 51st Street
Suite 600
Boca Raton, FL 33431

Phone 561 995-5500

January 29, 2013

City of Sanibel
Jim Jordan-Planning Director
800 Dunlop Road, Sanibel FL 33957.

RE: Verizon Wireless Cell Tower Design – 68996 Sanibel Donax Water Treatment Facility

Dear Mr. Jordan

Verizon Wireless is respectfully requesting an extension of the completed Building Permit Submittal date as outlined in the Tower Lease Agreement between VZW and the City of Sanibel, to June 30th, 2013 for the proposed wireless facility located at the Donax Water Treatment facility. As a result of the unique design and fabrication requirements of the stealth flagpole, the final structural design has been delayed with an expected completion date on or before June 30th, 2013.

We appreciate your consideration and review of this request. Please feel free to contact me directly with any questions or concerns you may have.

Sincerely,

Josephine Conde

Josephine Conde
Real Estate Manager – Verizon Wireless
777 Yamato Road, Suite 600
Boca Raton, FL 33431
561 995 5553

FIRST AMENDMENT TO
LEASE AGREEMENT
(SITE 68996 – SANIBEL DONAX WWTP)

THIS FIRST AMENDMENT to Lease Agreement is entered into this 5th day of February, 2013, by and between the City of Sanibel, a municipal corporation ("Owner") and Verizon Wireless Personal Communications LP d/b/a Verizon Wireless, a Delaware Limited Partnership ("Lessee") and amends that certain Lease Agreement between Owner and Lessee dated the 22nd day of February, 2012 (hereinafter referred to as "Lease Agreement").

WHEREAS, the Lease Agreement in Section 6(C), requires Lessee to file a completed Building Permit application with the City of Sanibel within twelve (12) months of the Execution Date of the Lease Agreement; and

WHEREAS, it appears that Lessee will need an extension to the twelve (12) month period in order to complete the Building Permit application filing process; and

WHEREAS, Owner is amenable to an extension in order to allow Lessee to complete the Building Permit application process and file a completed Building Permit application;

NOW, THEREFORE, in consideration of the sum of ten dollars ($10.00), acknowledged by each party to have been paid and received, the mutual obligations and agreements set forth herein and other good and valuable consideration, the sufficiency of which is acknowledged by Owner and Lessee, Owner and Lessee agree as follows:

SECTION I. Amendment to Section 6 entitled "Term; and Extensions".

Section 6, entitled "Term; and Extensions", subsection C, is hereby amended as follows, with underlined language indicating additions and stricken through language indicating deletions:

C. Requirement for Permit. ~~within 12 Months~~. Notwithstanding any other provision of this Lease, Lessee shall be required to file a completed Building Permit application with the City of Sanibel ~~within 12 months of the Execution Date of this Lease~~ on or before June 30, 2013. Failure of Lessee to comply with this provision shall render this Lease null and void and shall require renegotiation and a new review and approval by Lessee and the Sanibel City Council.

SECTION 2. The amendment specified above shall be the only amendment to the Lease Agreement and all other terms, conditions, provisions, rights, obligations and requirements of the Lease Agreement shall be in full force and effect and shall remain "as is" and unchanged.

IN WITNESS WHEREOF, the parties have executed this First Amendment to Lease Agreement on the date first written hereinabove.

OWNER:

CITY OF SANIBEL

By: _____
Kevin Ruane, Mayor
800 Dunlop Road
Sanibel, Florida 33957

ATTEST: _____
Pamela Smith, City Clerk

APPROVED AS TO FORM:

Kenneth B. Cuyler

Kenneth B. Cuyler, City Attorney

Date: 1/25/13

LESSEE:

Verizon Wireless Personal Communications LP
dba Verizon Wireless

By: _____
Hans F. Leutenegger
Area Vice President Network
One Verizon Way
Mail Stop 4AW100
Basking Ridge, NJ 07920

Date: _____

Witnesses:

By: _____ By: _____
Name: _____ Name: _____

Discussion ensued regarding the fee should be higher.

Public Comment
None

The motion carried with Councilman Denham voting against.

Council recessed at 12:49 p.m.

Council reconvened at 1:32 p.m.

CITY MANAGER
Informational Items
Redevelopment Update
Center4Life Needs Assessment Presentation by Henry Woodroffe

Ms. Zimomra noted that Mr. Woodroffe constructed the award winning City Hall and Recreation Center design.

Mr. Woodroffe gave a brief PowerPoint Presentation.

Mr. Zimomra spoke to Mr. Woodroffe reviewing St. Isabele's and Community Church due to the fluctuation in their parking needs and grassy areas for overflow parking that was marked and delineated with bollards. She further spoke to the linkage in green space and parking needs as a way to accomplish overflow parking during peak season and necessary usage.

Discussion ensued regarding next steps, May 21, 2013 workshop, what could be done with 20% less space, Ms. Zimomra noted that the model used for the recreation center, talk about unity and collaboration to consolidate all issues, each entity needs, connectivity needs, reduce traffic and congestion, Ms. Zimomra noted that a survey was completed for the construction of the recreation center, would like to have consensus to continue to work with Henry Woodroffe, allow Henry to review the needs assessments completed by non-profits.

Mayor Ruane moved, seconded by Councilman Harrity, to allow Mr. Henry Woodroffe to review all non-profit needs assessments.

Public Comment
None

The motion carried.

Verizon Telecommunications Tower Update

Ms. Zimomra noted that Verizon Telecommunications Tower design was not complete and Council extended the time frame for the development until June 30, 2013.

Discussion ensued regarding project manager may have resolved the design issue and were constructing a model, should give an extension, need to be more involved with Wi-Fi in the future and focus on challenges to make modifications if necessary, Director Jordan asked that Council give the Planning Department the ability to contact them and essential that staff come back to Council

Departmental Reports
Grease Trap Report
Planning Department Permit Activity Report March, 2013
Planning Department Code Enforcement Activity Report March, 2013
Administrative Departmental Reports
Status of Capital Projects

Exhibit O - Sanibel Bridge Inspection Statement 03-08-13
Exhibit P – Sanibel Bridge Beam Inspections Bridge #124114 Structure C
Exhibit Q – Sanibel Bridge Beam Inspections Bridge #124115 Structure B
Exhibit R – Sanibel Beam Inspections Bridge #124116 Structure
Exhibit S – Lee County 2012 Annual Report – Full Report
Mayor Ruane spoke to the following:

- 820 pages report
- Look at cost of building Causeway
- Finances vehicles
- Various expenditures
- Second process would be to look at Interlocal and structural and financial element to review on a bi-annual basis
- County forming a sub-committee and would have a seat
- Requirement for an audit was good for Council

Discussion ensued regarding separating the two subjects as noted above.

Request from Lee County D.O.T. for a representative to serve on the Traffic and Revenue Analysis Toll Study

Discussion ensued regarding look at cost of building causeway, financing vehicles, process to separate Interlocal agreement, structural and financial element to review on a bi-annual basis, county form a sub-committee, understand issues of structure and financing, separate the two items 1) requirement of audit and any additional information needed; 2) reporting and financial point of view, county extended a member to be appointed to causeway and may be thoughts to further have additional information, need one voice when dealing with commissioners, need to have one message, Mayor needed to continue his work with county board, to review everything to make sure Sanibel is a partner with Lee County, revenue analyzed, but need to look at expenditures; coming on island at Mariners Point and cost and overtures with further discussion, only have revenue, expenditures, need to drill down, what was the process, make need to outsource review of intricacies, congress continue to drill down on expenditures for junior liens, agreed, present to look at Interlocal, settlement agreement on bi-annual basis, Mayor Ruane spokesperson and Vice Mayor Congress to work with staff.

Karen Storijohann spoke to a slide shown by Paul Wingard on bridge footprint, which changed and a cost overrun for that reason. She also mentioned the reconstruction of the toll area.

Vice Mayor Congress work with Lee County staff as the City's financial person and Mayor Ruane would be the City's spokesperson.

Mayor Ruane moved, seconded by Councilman Harrity, to appoint Vice Mayor Congress to the Lee County Traffic Revenue and Analysis Toll Study committee.

Public Comment
None

The motion carried.

Continued discussion relative to the Verizon Telecommunications Tower at Donax Wastewater Treatment Plant, 630 Donax Street

Mr. Cuyler noted the application was submitted and is under review and there was enough time to correct any application deficiencies.

NEW BUSINESS

Sanibel Municipal Police Officers Pension Trust

Discussion regarding investment return and turnover assumptions

Mayor Ruane spoke to the following:

Ballots were passed to Councilmembers.
The ballots reflected the following:

Peter Gaines	
Chuck Ketteman	3
Tom Krekel	4
Jason Maughan	1
Mike Miller	1
Robert Moyle	
John Talmage	4

Mayor Ruane moved, seconded by Councilman Harrity, to adopt Resolution 14-008 and reappoint the incumbents.

Public Comment
None

The motion carried with Councilman Jennings excused.

CITY MANAGER
Informational Items
Status report of Verizon Tower
Ms. Zimomra spoke to the following:

- Extended to March 17, 2014
- Lease agreement w/Verizon City mutst sihn off on any collocatpr with a sub-lease date of January 01, 2014
- City Clerk pulling historical information
- Identify remaining sites

Discussion ensued regarding construction delay due to design, contractor pulled permits and told in the past the project was lower in importance due to the economic downturn, give extension to review next steps and technology different and code review new technology when reviewing site locations.

Public Comment
John Gill spoke to the length of time the permit was first pulled and what does the City have as leverage. He further spoke to no reception on the east-end of the island and the need for reasonable amenities at a vacation location.

Sonia Van Racland spoke to her agreement with no reception and who would discuss the problem.

Mayor Raune noted that he had taken the project and would be discussion options with the City Manager.